ASSEMBLY INSTRUCTION

3Seat Sofa

Thank you for purchasing this quality product. Be sure to check all packing material carefully for small parts which may have come loose inside the carton during shipment. Separate, identify and count all parts and metal hardware. Compare with parts list to be sure all parts are present. If any part(s) are missing or damaged, please contact your local furniture dealer. For efficient and speedy service, please indicate the model number and code letter of part(s) needed.

*** Do not fully tighten screws until fully assembled ***

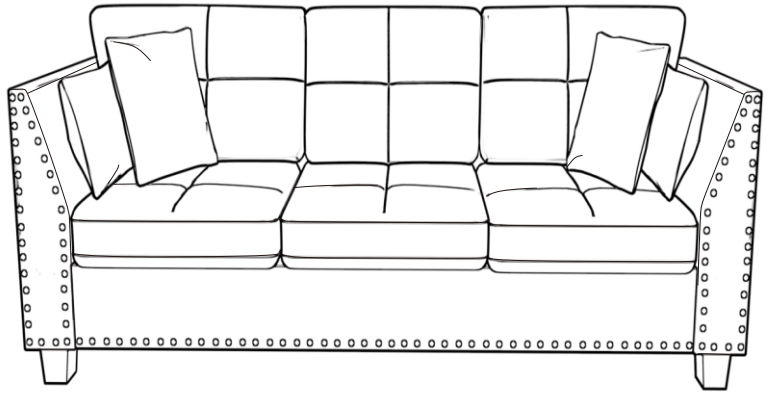

PARTS LIST

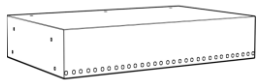 A x1	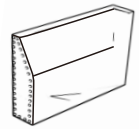 BL x1	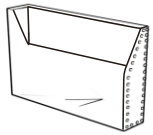 BR x1	 C x1
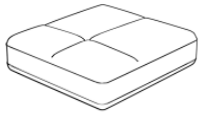 D x3	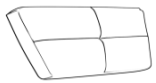 E x1	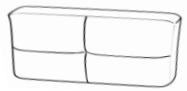 F x1	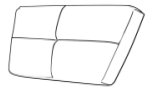 G x1
 H x2	 I x2	 J Leg x4	

HARDWARE LIST

 1 Bolt x4	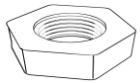 2 Nut x4	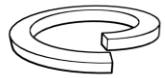 3 Spring Washer x8	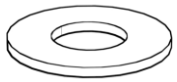 4 Washer x12
 5 Bolt x8	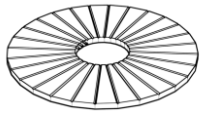 6 Plastic Washer x4	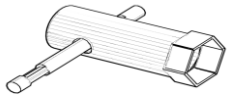 7 Wrench x1	 8 Allen Wren x1

Step 1

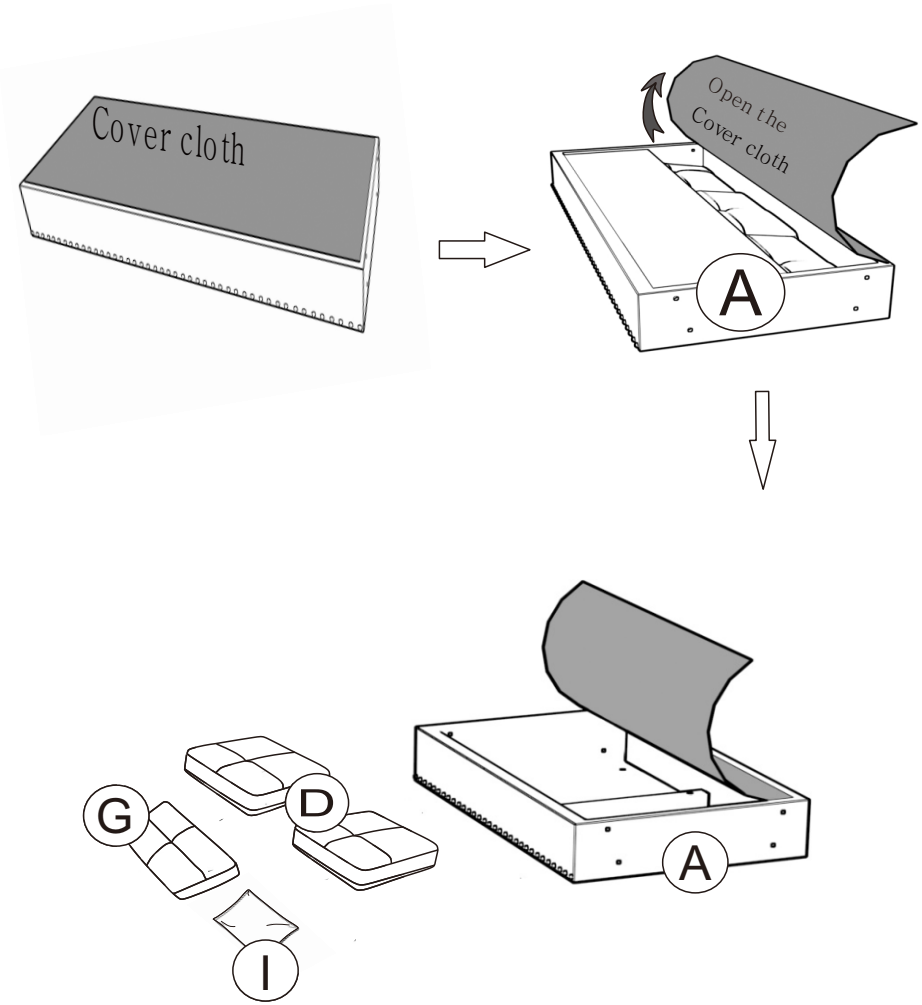

Step 2

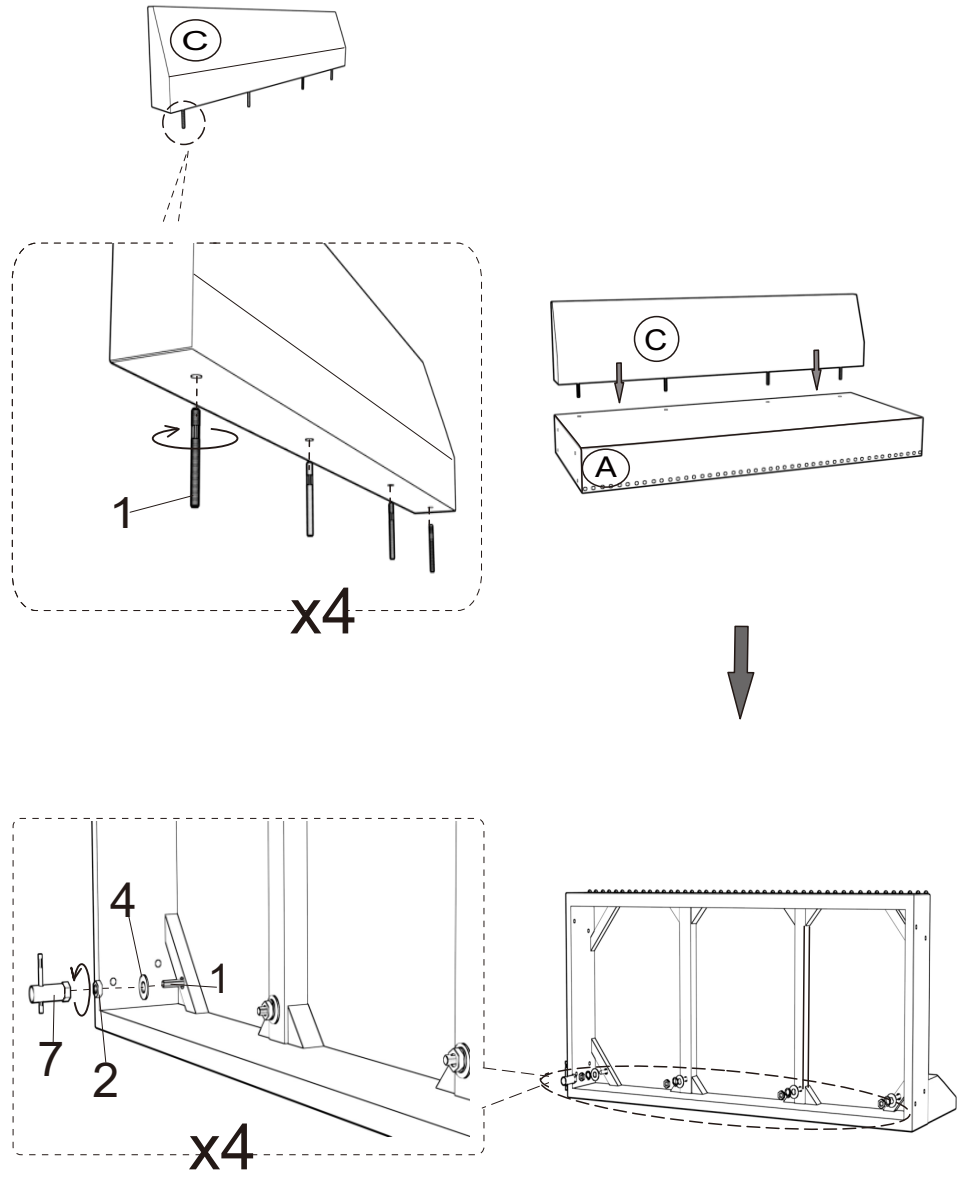

Assembly Instructions

Step 3

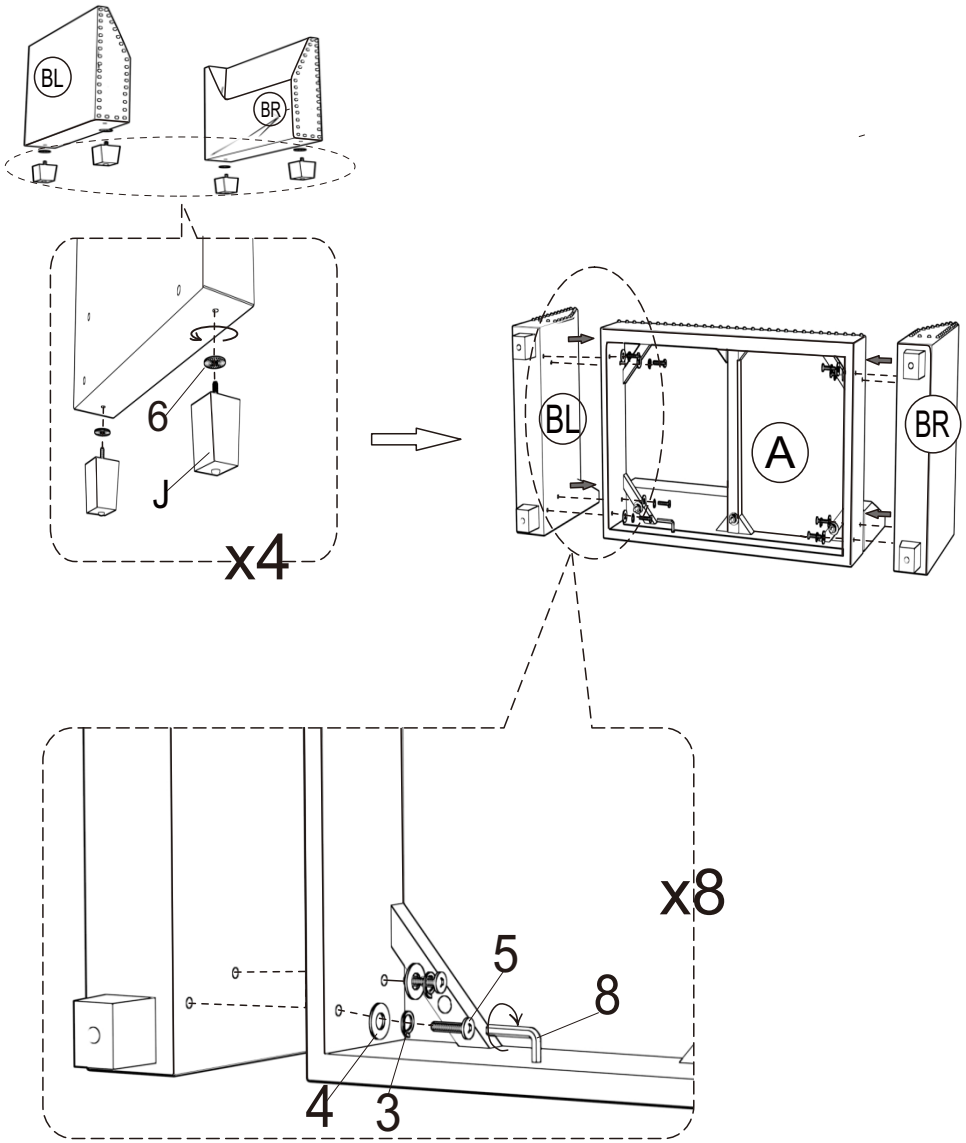

Step 4

