AKT209-RH

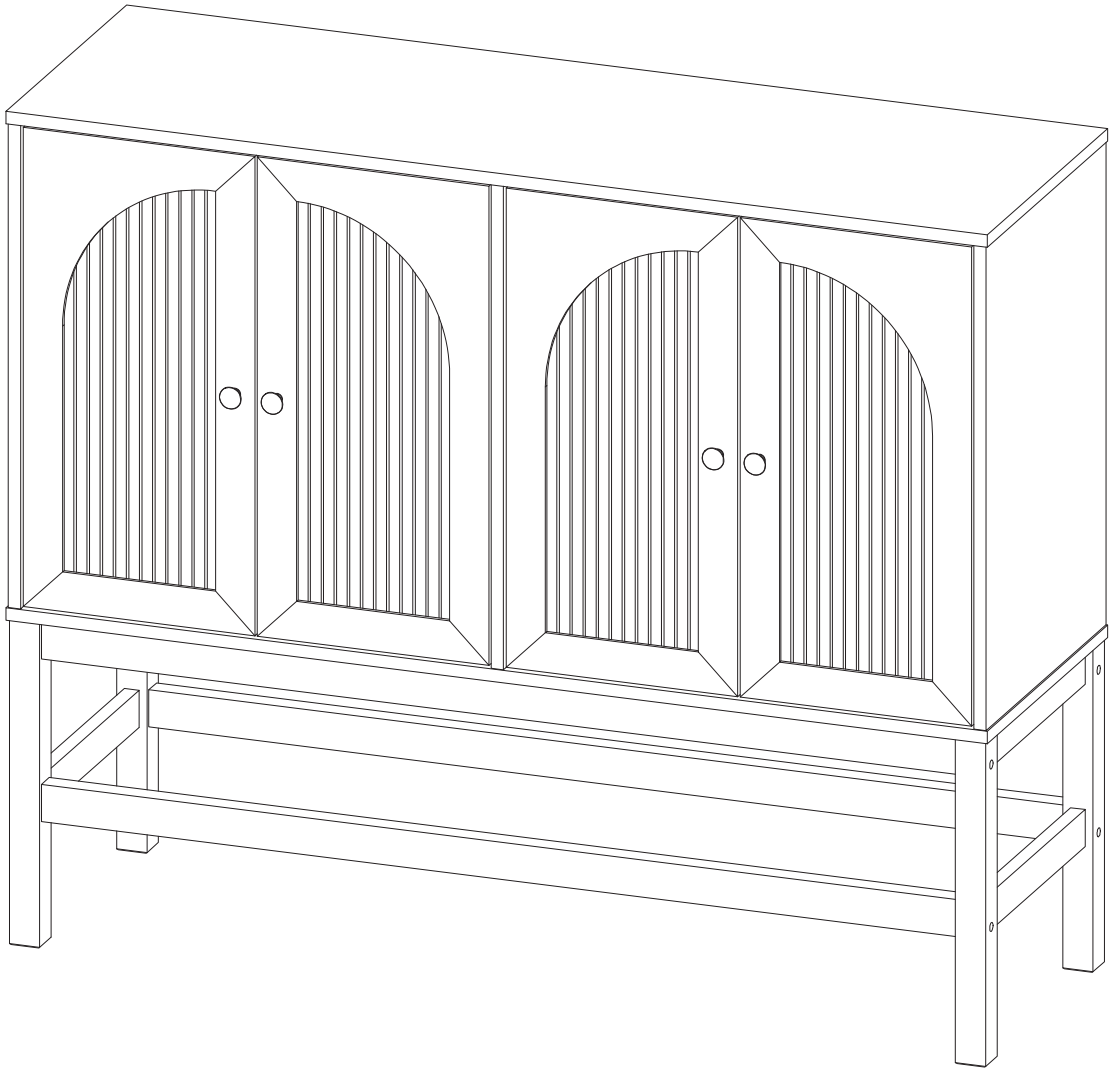

Please thoroughly review the installation instructions priorto commencing the installation process. Ensure that all tools are utilized appropriately and with due care. Should you encounter any questions regarding the product or the installation procedure, do not hesitate to contact us. We will make every effort to assist you in resolving any issues.

We aim to provide you with a distinctive experience.

Before You Start

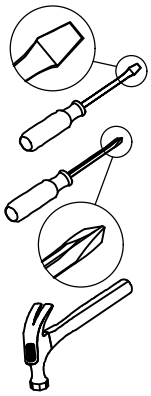

- Read through each step carefully and follow the proper order
- Separate and count all your parts and hardware
- Give yourself enough room for the assembly process
- Have the following tools: Flat Head Screwdriver, #2 Phillips Head Screwdriver and Hammer
- Caution: If using a power drill or power screwdriver for screwing, please be aware of to slow down and stop when screw is tight. Failure to do so may result in stripping the screw. （Assembly speed can be increased by using electric screwdriver）

Helpful Hints

PEOPLE NEEDED FOR ASSEMBLY: **1-2**

- Open your item in the area you plan to keep it to avoid excessive heavy lifting.



- Identify, sort and count the parts before attempting assembly.

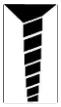

- Compression dowels are lightly tapped in with a hammer.

- Slides are labeled with an **R** (right) and **L** (left) for proper placement.

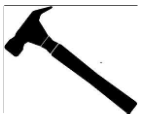

- Make sure to always face the point on the top of the Cam Lock towards the outer edge.



- If there is a back panel in the package, please install it to make sure your unit is complete and sturdy.



-Please fix all the screws provided for the back panel which can enhance product stability. If it is difficult to fix it when tightening, it can be fixed with the help of a hammer and then tightened.



- Do NOT use harsh chemicals or abrasive cleaners on this item.

- Never push, pull, or drag your furniture.

Board Identification

Not actual size

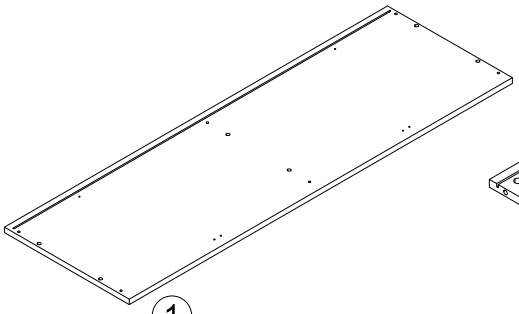

① TOP
Qty:1

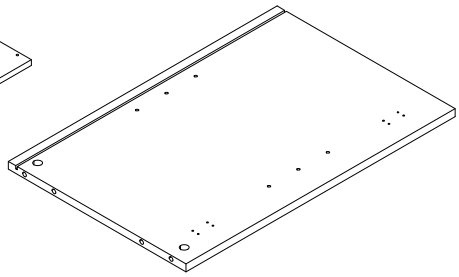

② LEFT SIDE PANEL
Qty:1

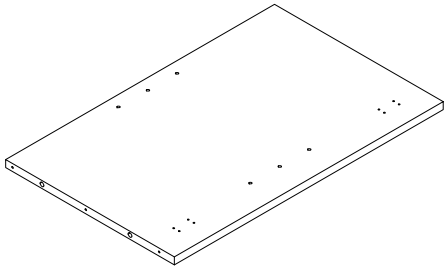

③ MIDDLE PANEL
Qty:1

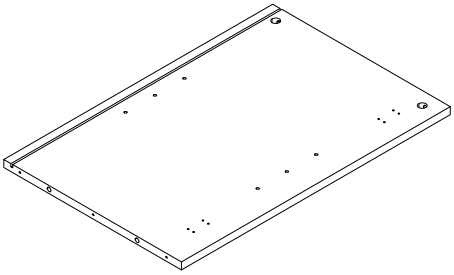

④ RIGHT SIDE PANEL
Qty:1

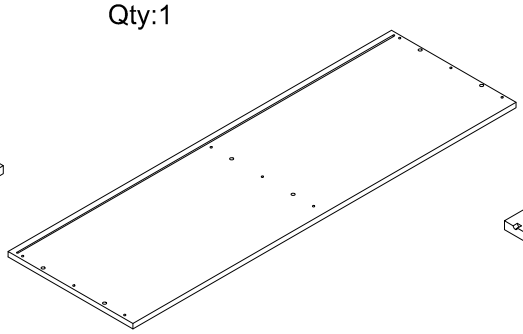

⑤ BOTTOM
Qty:1

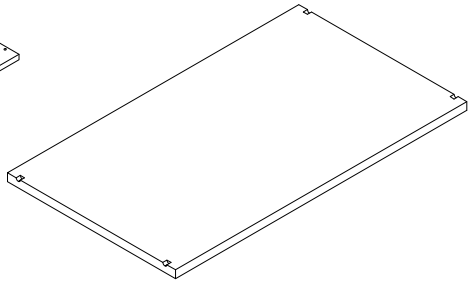

⑥ ADJUSTABLE SHELF
Qty:2

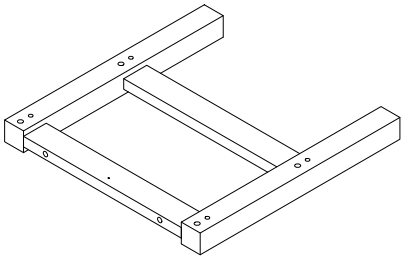

⑦ SUPPORT FOOT
Qty:2

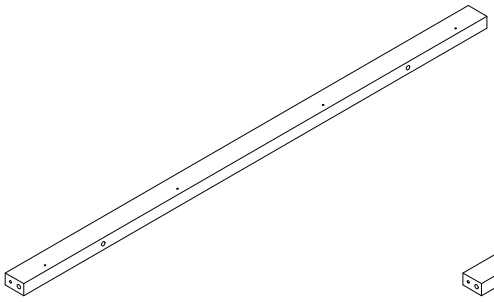

⑧ RAIL
Qty:1

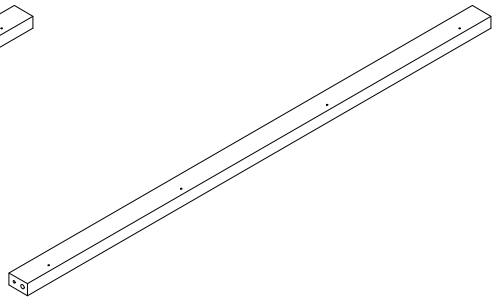

⑨ RAIL
Qty:1

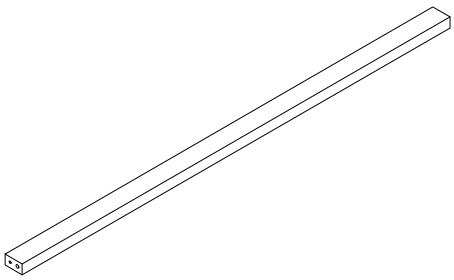

⑩ RAIL
Qty:2

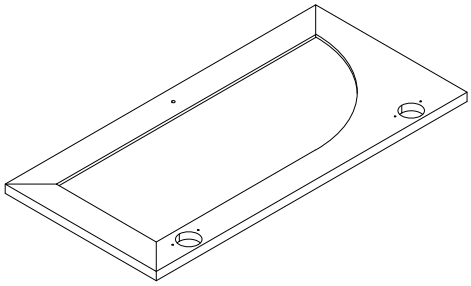

⑪ DOOR
Qty:2

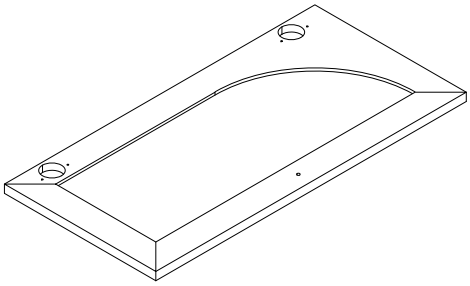

⑫ DOOR
Qty:2

Board Identification

Not actual size

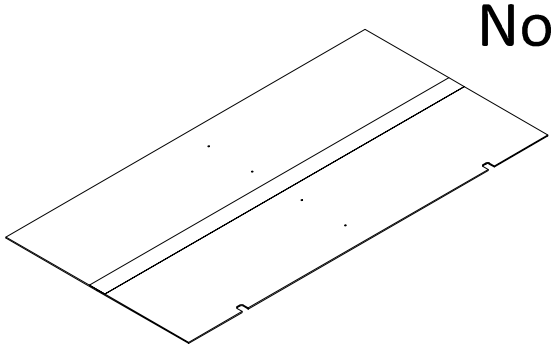

⑬

BACK PANEL
Qty:1

Part List



Ø15X11mm | Ⓐ | X6

CAM LOCK
spare:1

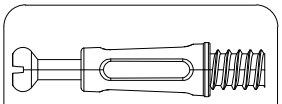

Ø6.5X35mm | Ⓑ | X6

CAM BOLT
spare:1



Ø8X30mm | Ⓒ | X26

WOODEN DOWEL
spare:3

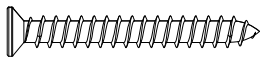

Ø4X40mm | Ⓓ | X9

SCREW
spare:1

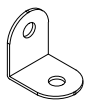

20X20X16mm | Ⓔ | X10

L -SHAPED IRON



Ø4X14mm | Ⓕ | X20

SCREW
spare:2

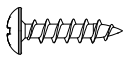

Ø3X14mm | Ⓖ | X8

SCREW
spare:1

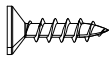

Ø3.5X14mm | Ⓗ | X48

SCREW
spare:3

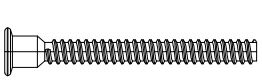

Ø6.3X50mm | Ⓘ | X8

SCREW
spare:1

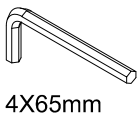

4X65mm | Ⓙ | X1

HEX KEY

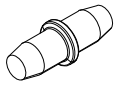

Ø5X17mm | Ⓚ | X8

SHELF SUPPORT
spare:1

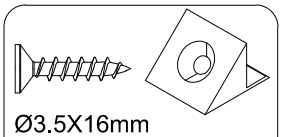

Ø3.5X16mm | Ⓛ | X10

BACKBOARD BUCKLE

Part List

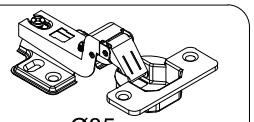

M	X8

HINGE



N	X8

HOLE COVER
spare:1

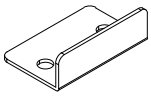

O	X2

STOPPER

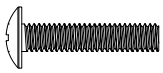

P	X4

SCREW
spare:1

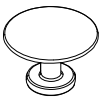

Q	X4

HANDLE

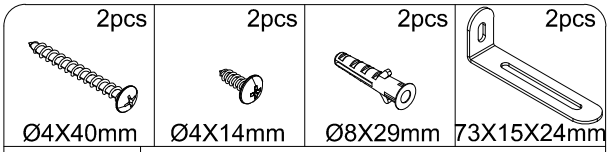

R	X1 set

ANTI-TIPPING HARDWARE

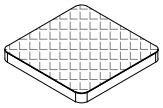

S	X4

SELF-ADHESIVE FOOT PADS

Cam Lock Fastening System

Insert the cam bolt into the hole first, then insert the cam lock and lock it.

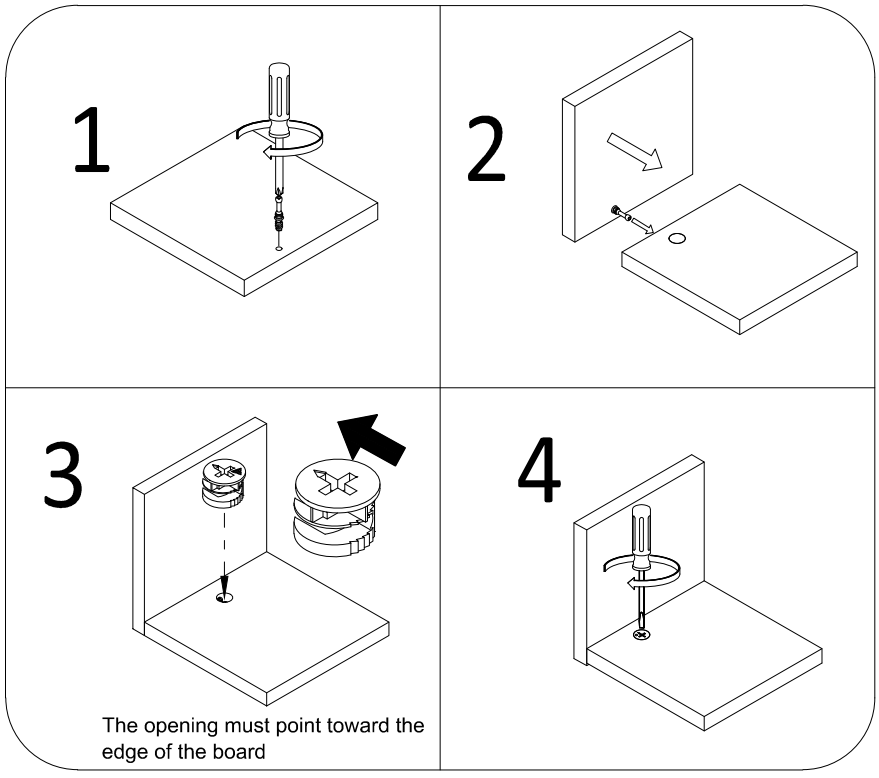

Board Identification

Not actual size

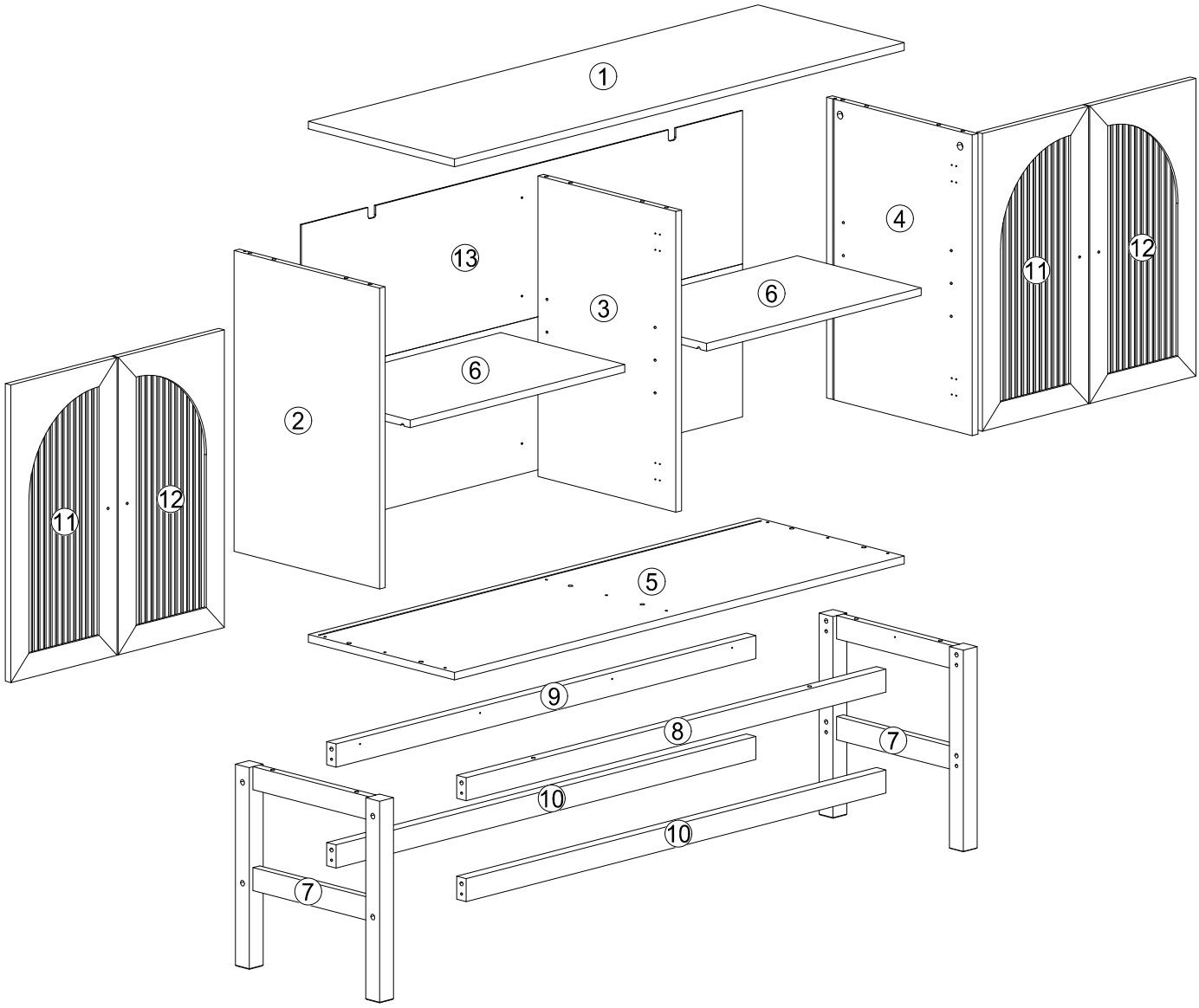

STEP1

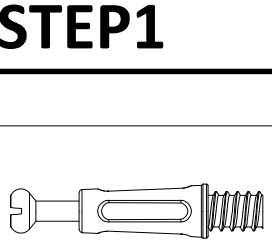

Ø6.5X35mm

B	X6

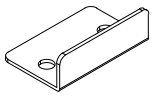

30X20X10mm

O	X2

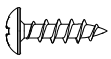

Ø3X12mm

G	X4

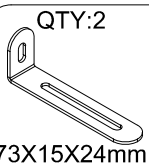

R	X1 set

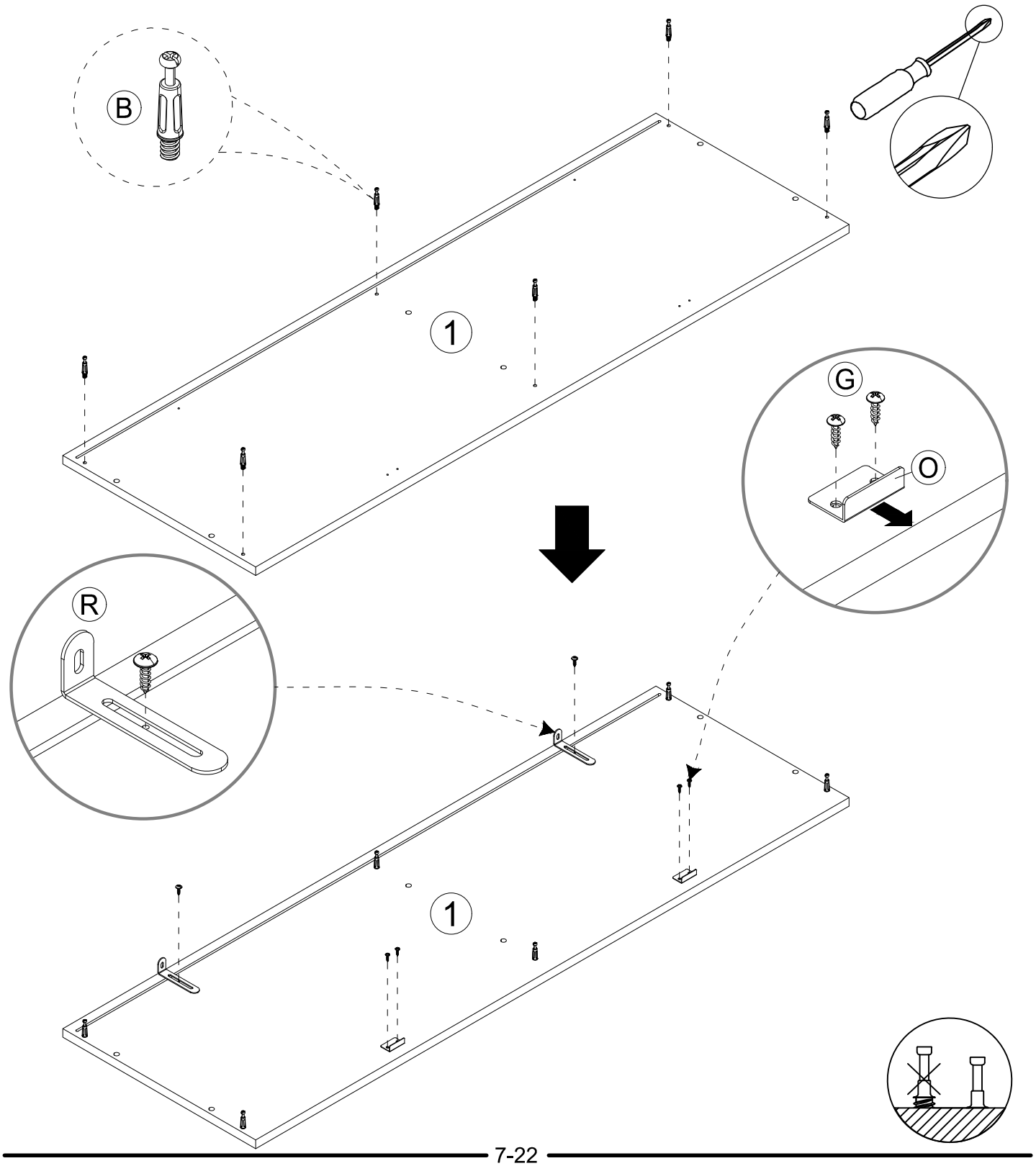

STEP2

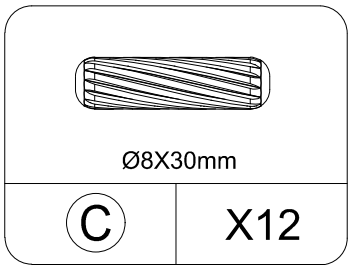

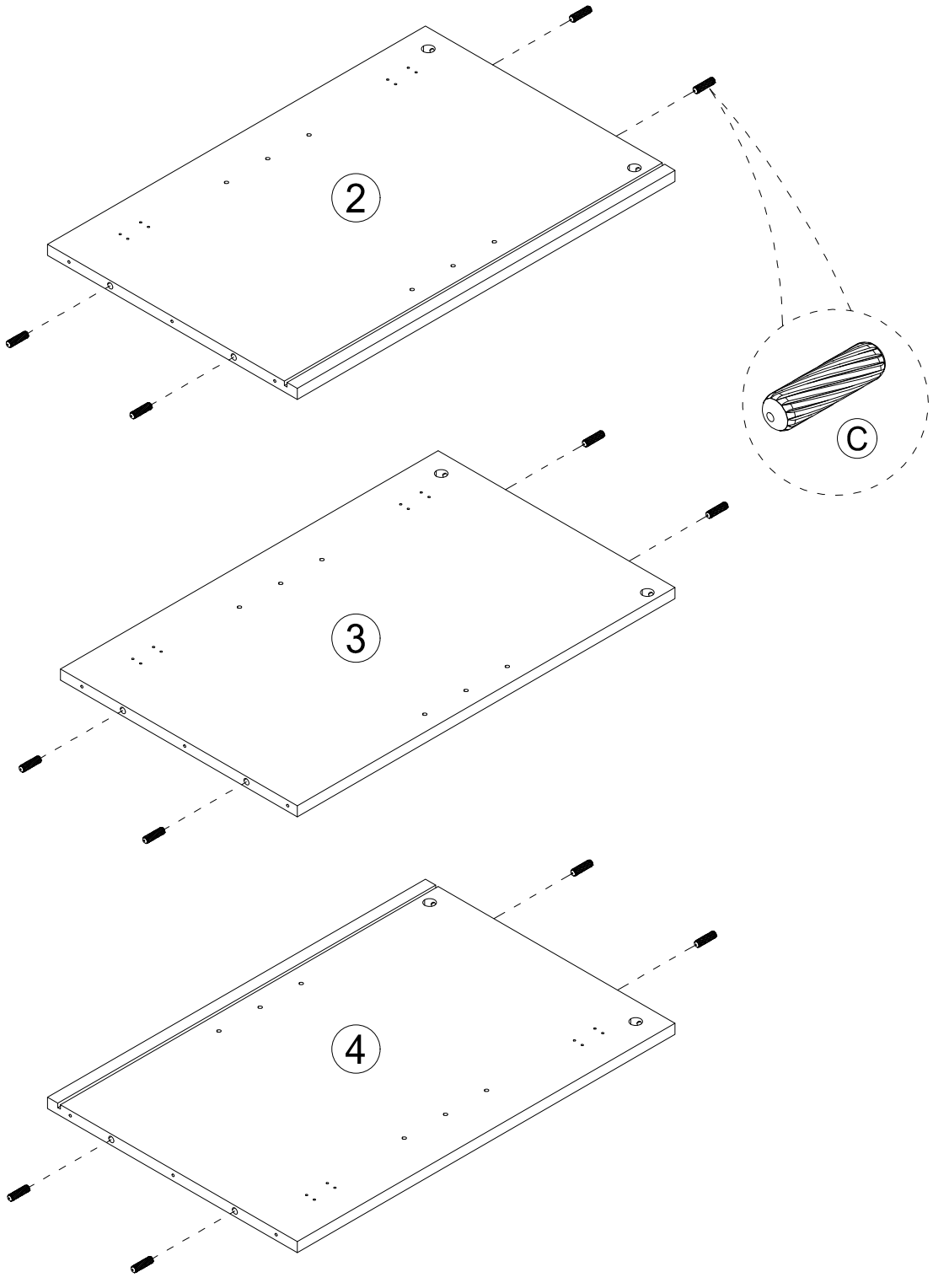

STEP3

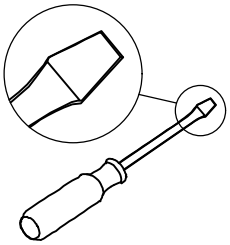

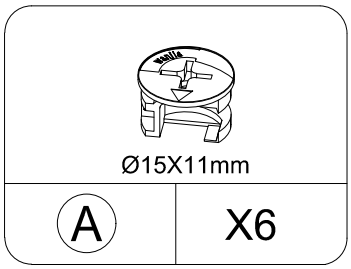

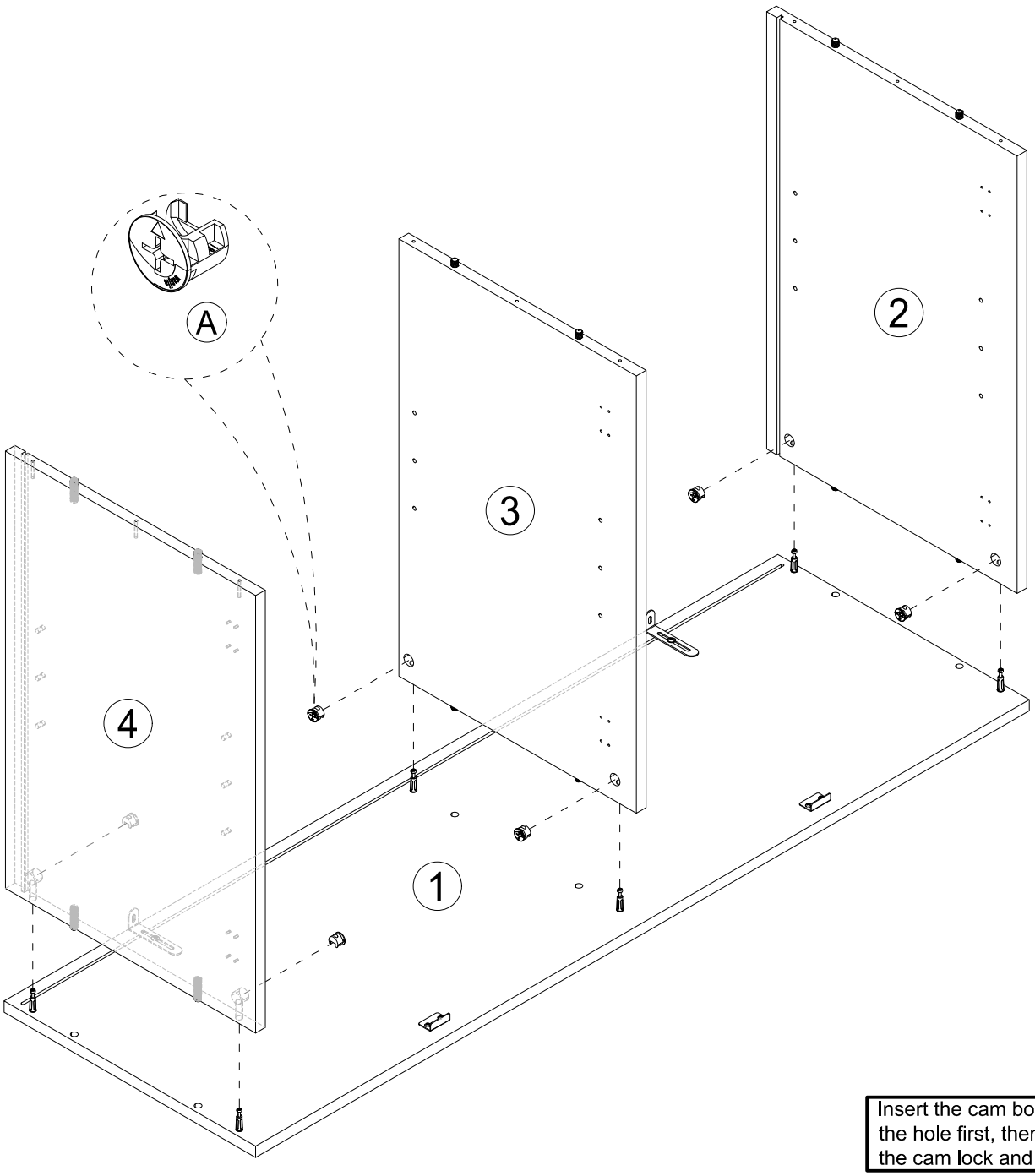

Insert the cam bolt into the hole first, then insert the cam lock and lock it.

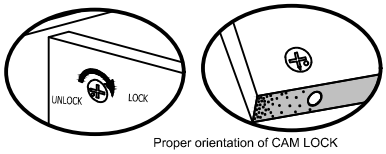

Proper orientation of CAM LOCK

STEP4

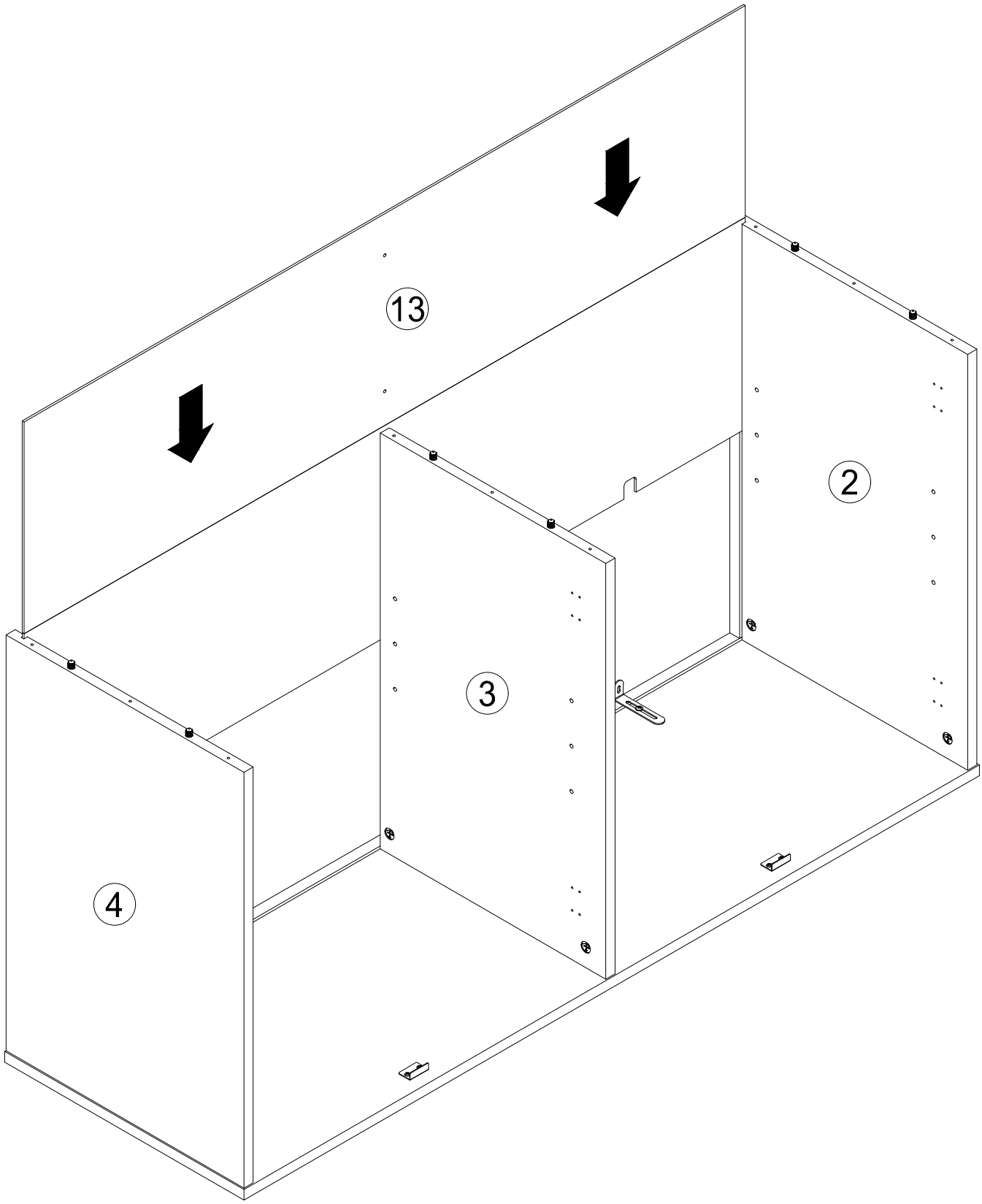

STEP5

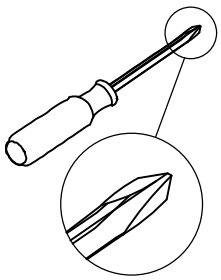

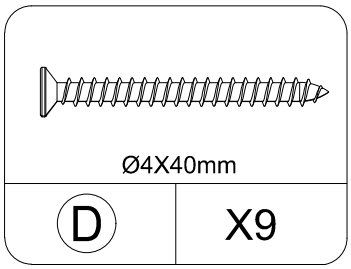

THIS STEP REQUIRES 2 PEOPLE

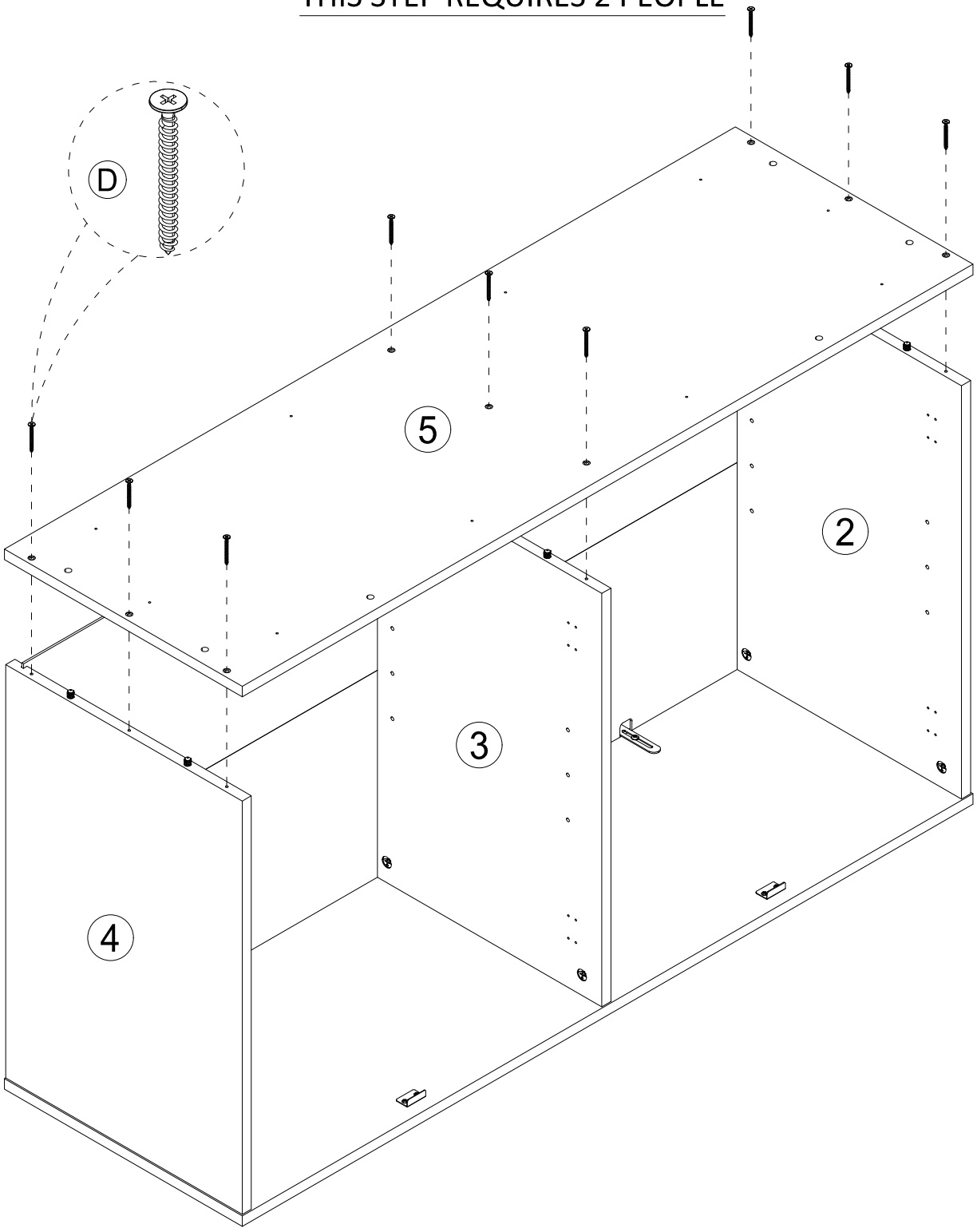

STEP6

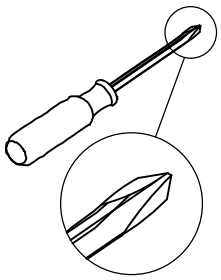



Ø8X30mm

C	X4

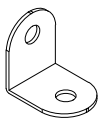

20X20X16mm

E	X2



Ø4X14mm

F	X2

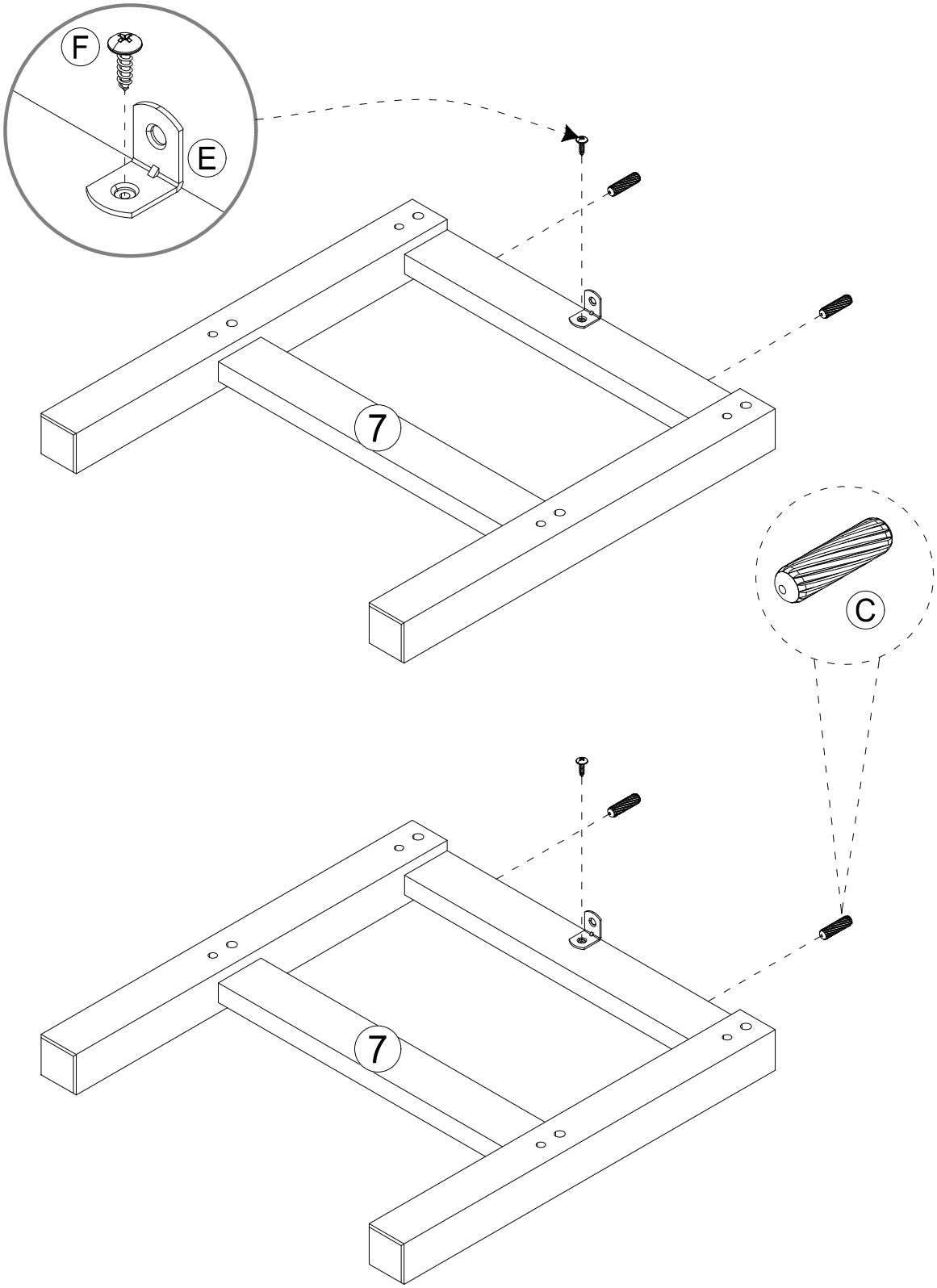

STEP7

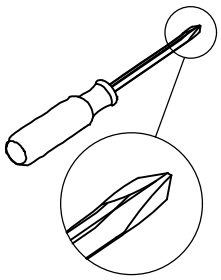

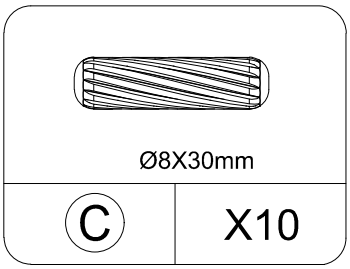

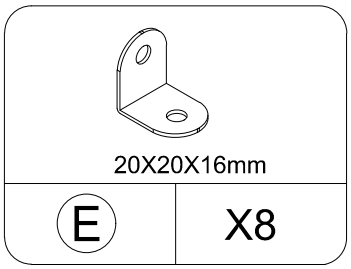

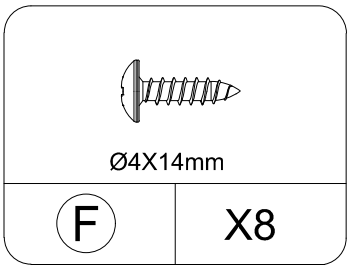

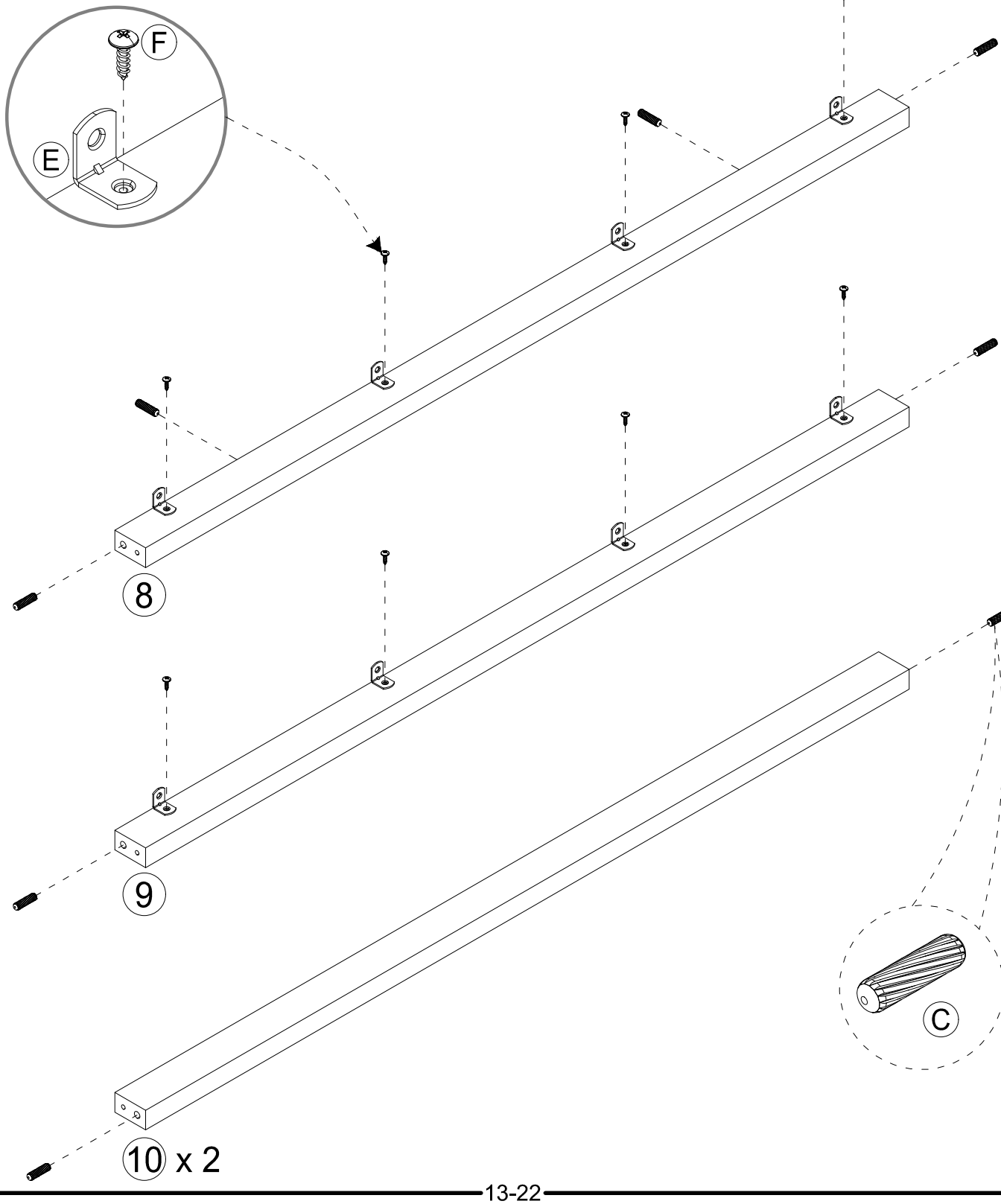

STEP8

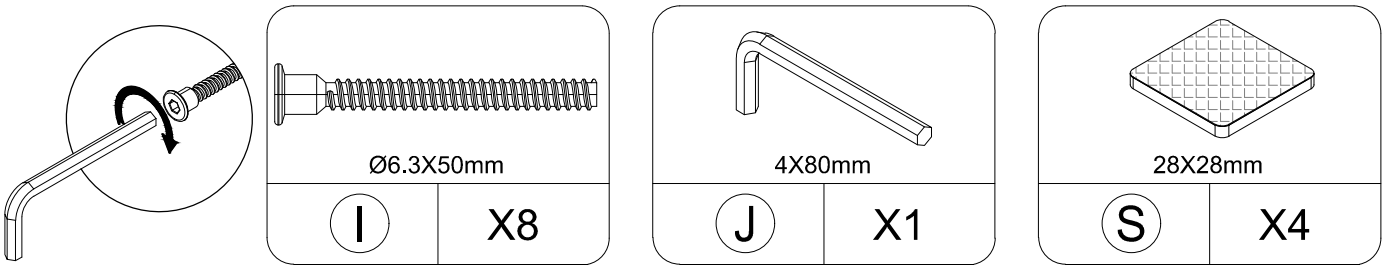

THIS STEP REQUIRES 2 PEOPLE

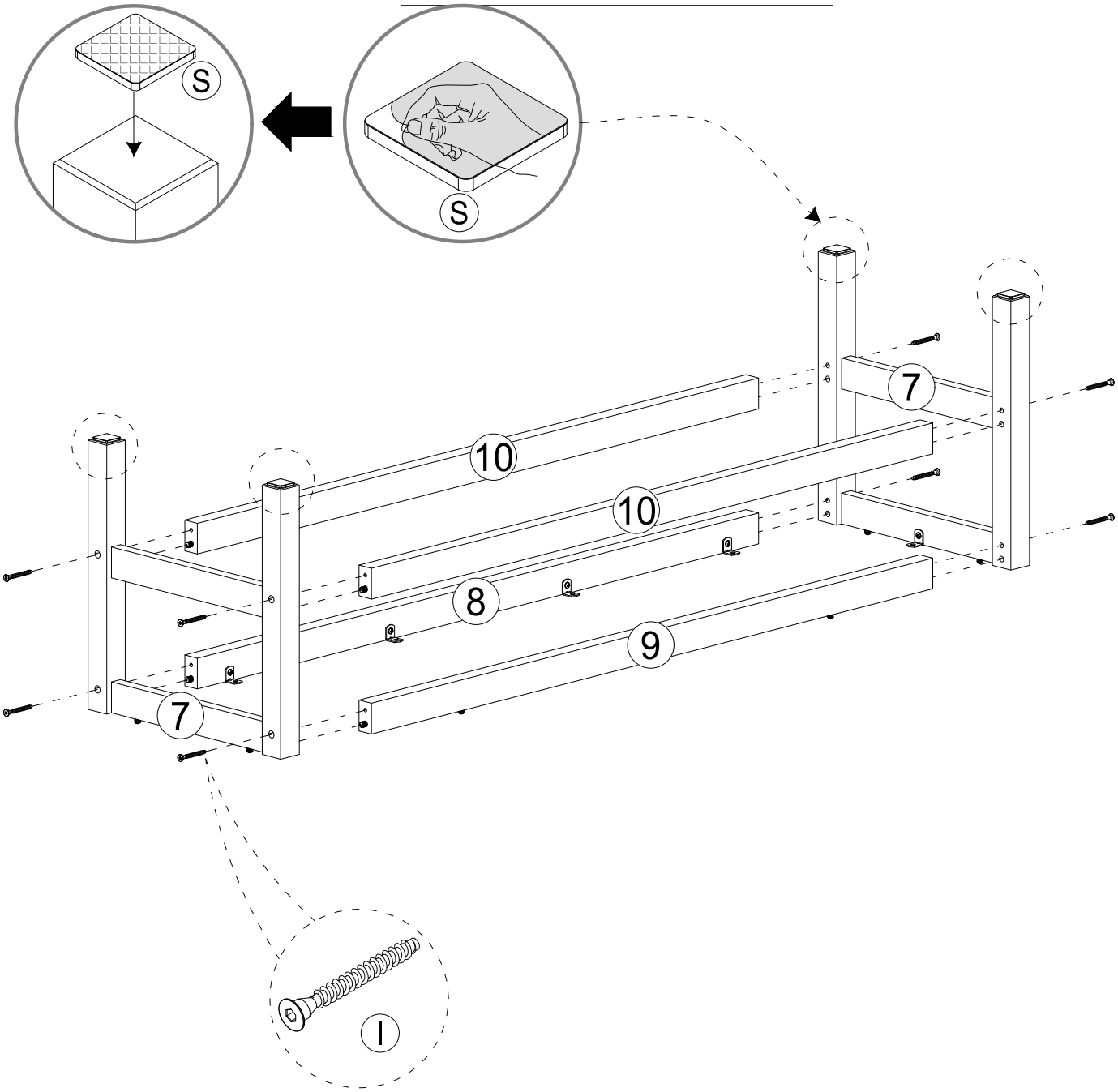

STEP9

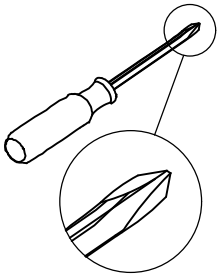

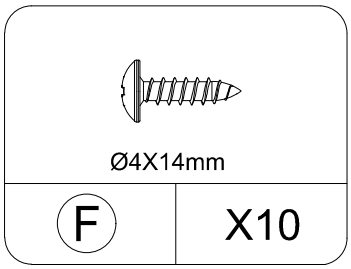

THIS STEP REQUIRES 2 PEOPLE

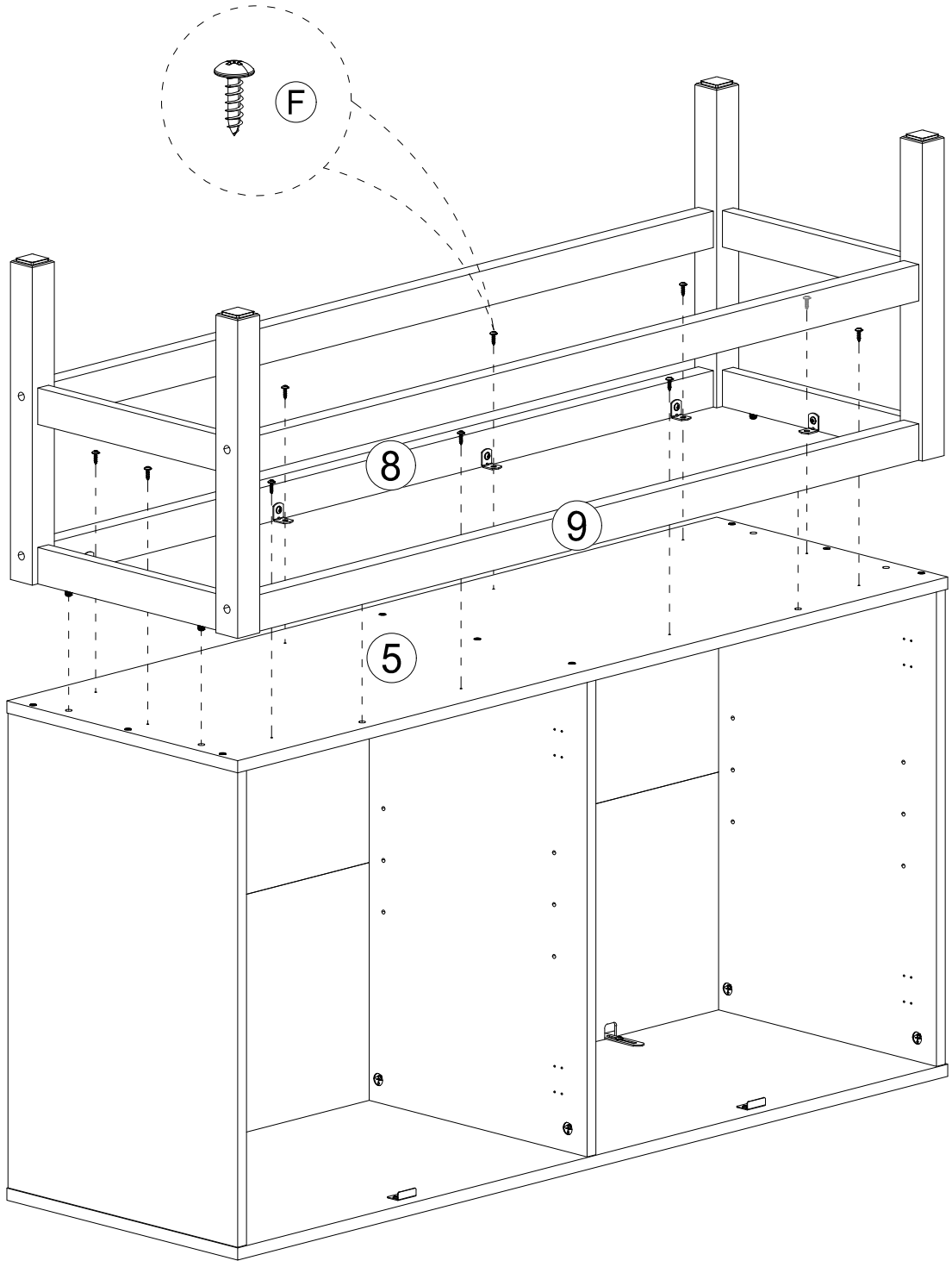

STEP10

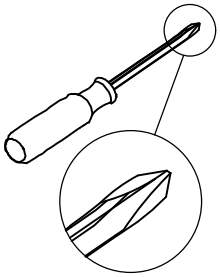

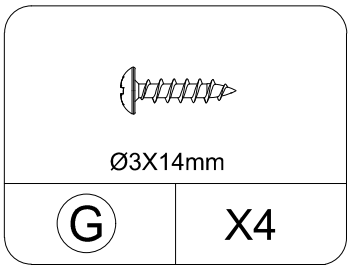
Ø3X14mm
G
X4

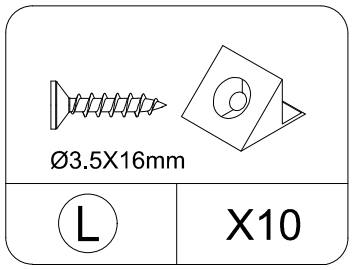
Ø3.5X16mm
L
X10

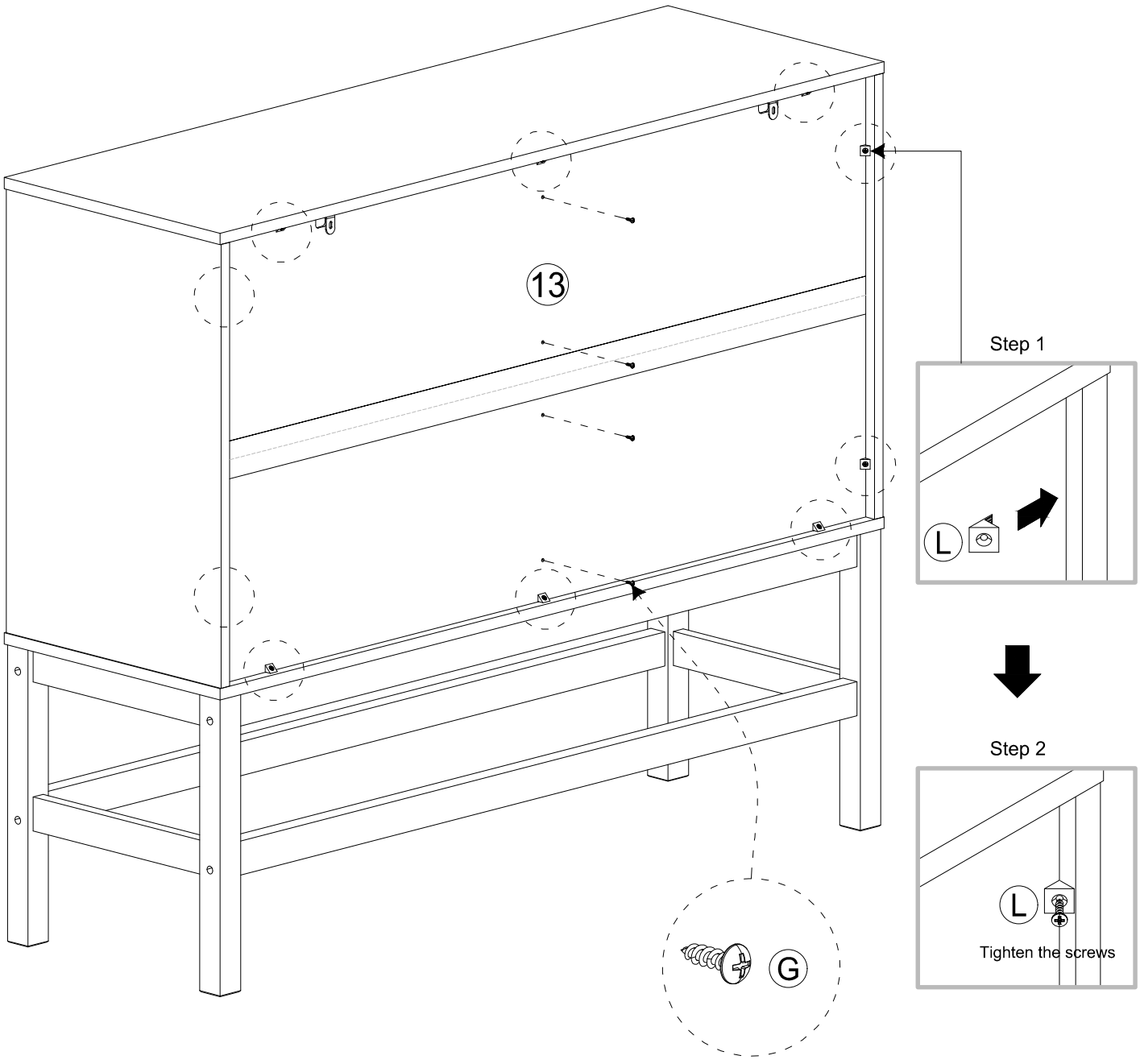
13
Step 1
L
Step 2
L
Tighten the screws
G

STEP11

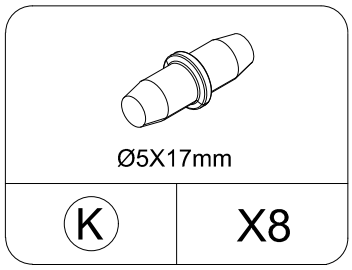

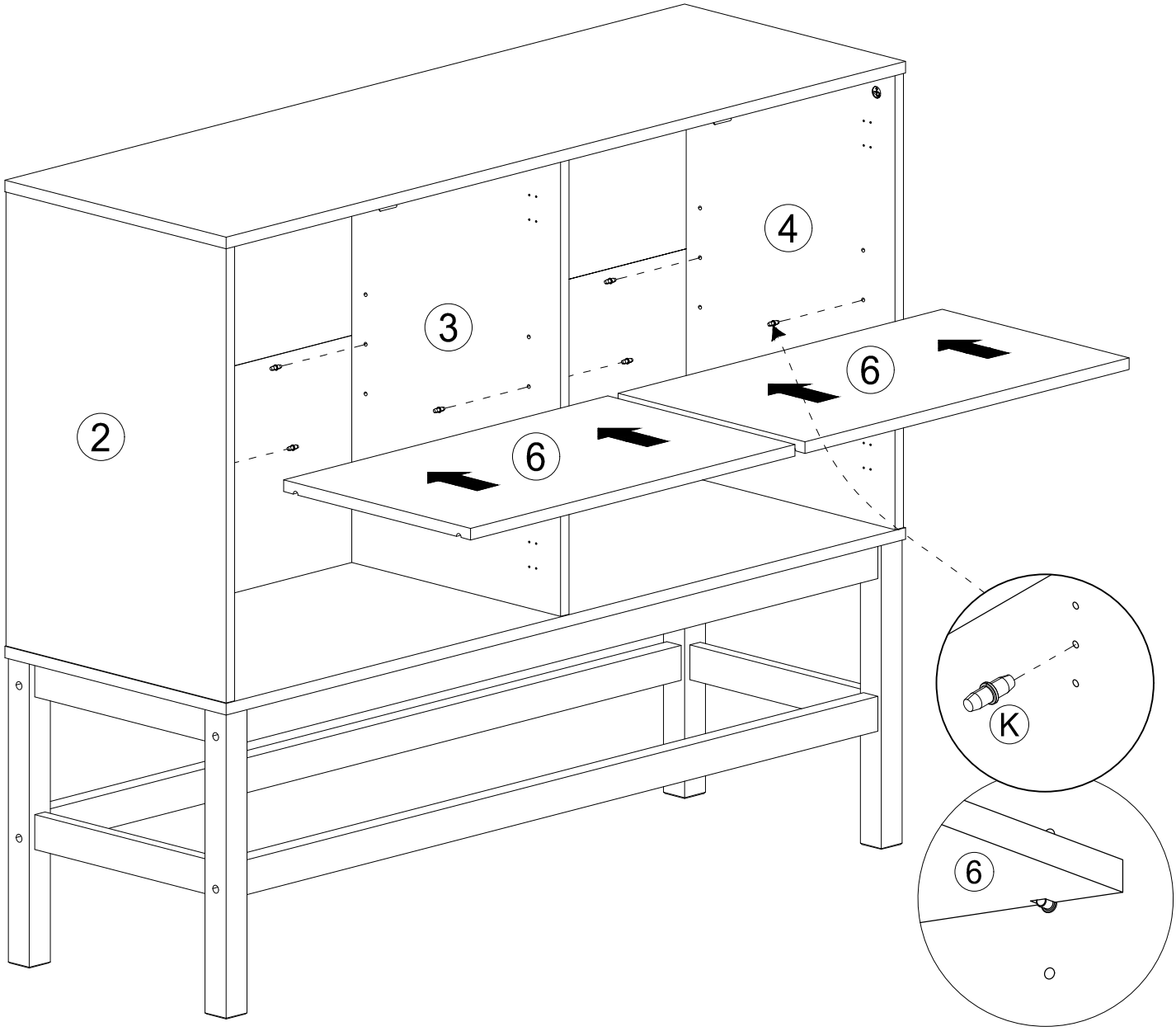

This shelf features freely adjustable height, allowing you to move it vertically according to storage needs. Both side panels are equipped with evenly spaced pre-drilled adjustment holes. Simply align the shelf clips with the desired holes at your preferred height for tool-free adjustment.

STEP12

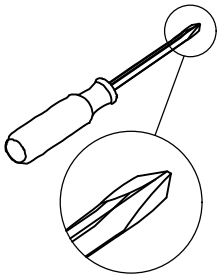

QTY:2	QTY:2
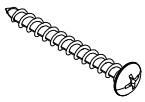 Ø4X40mm	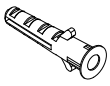 Ø8X29mm
R	X1 set

1.Put the cabinet against the wall and mark the hole locked against the wall with a marker.

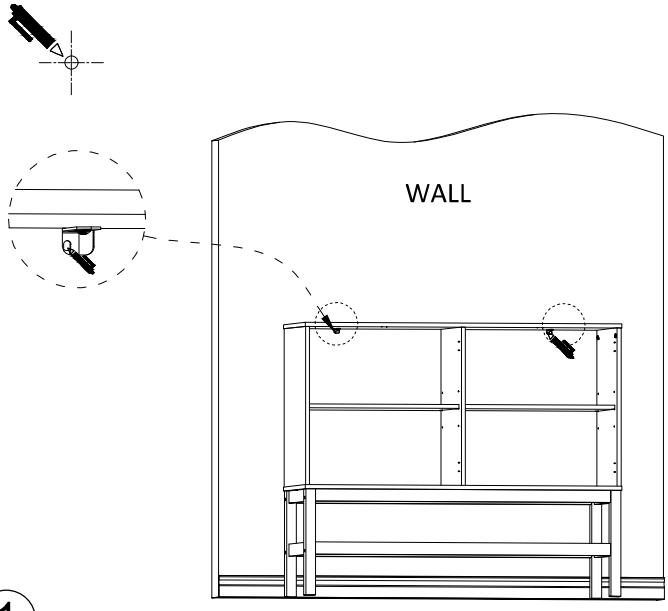

1

2.Use an electric drill to drill 2 holes with a diameter of Ø 6 and a depth of 45mm at the marked location.



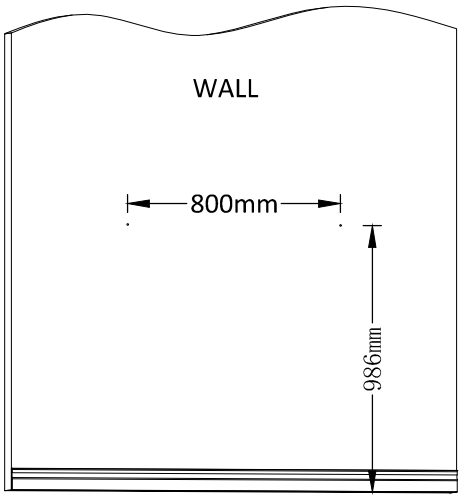

2

3.Place anchors (R) into the hole.



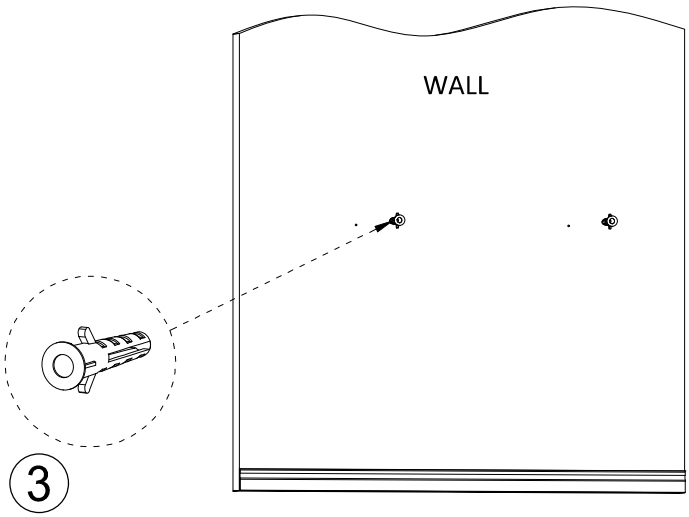

3

4.Push the cabinet close to the wall, align it with the holes, and then tighten it with screws(R).

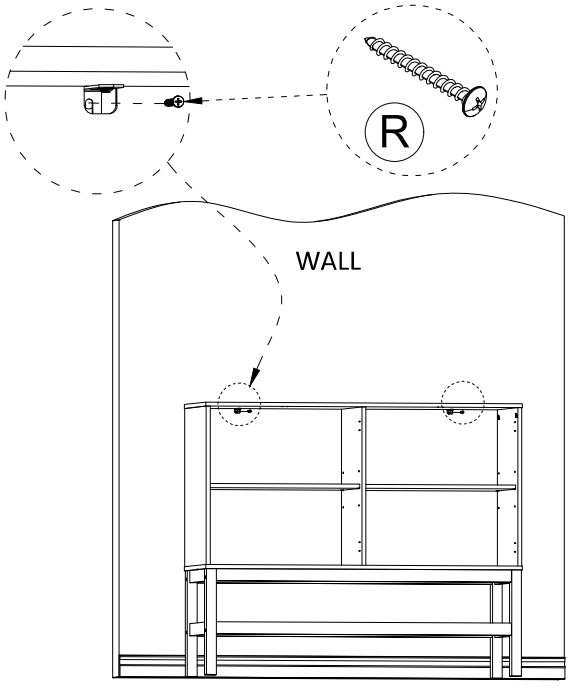

4

STEP13

Ø3.5X14mm		M4X19mm		Ø26X19mm		Ø35mm	
H	X16	P	X4	Q	X4	M	X8

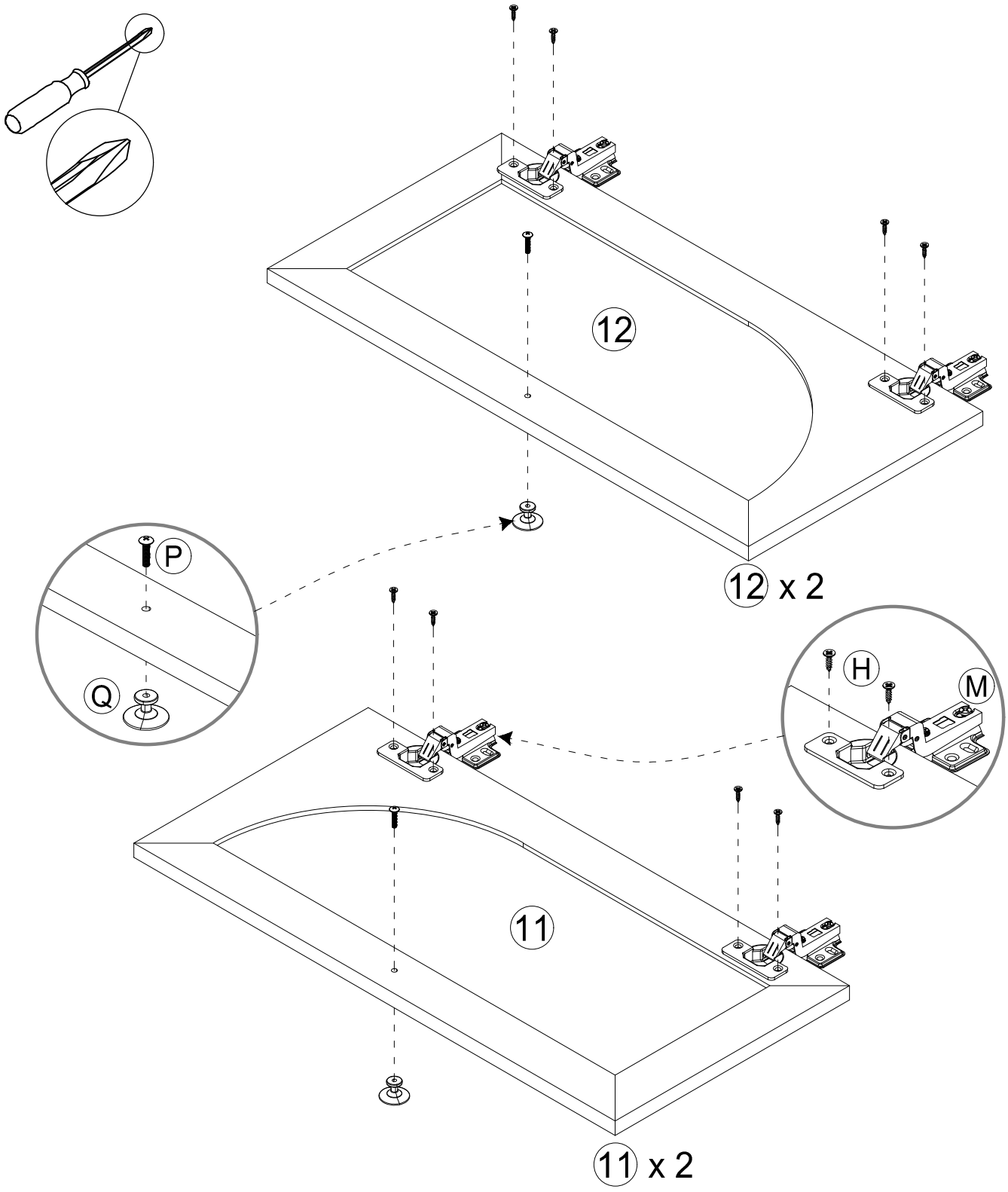

STEP14

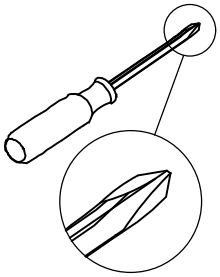

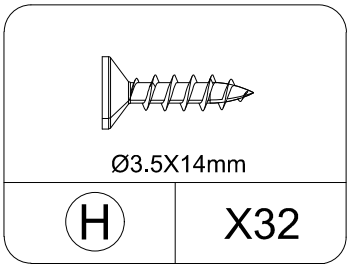

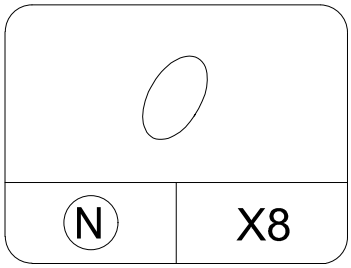

THIS STEP REQUIRES 2 PEOPLE

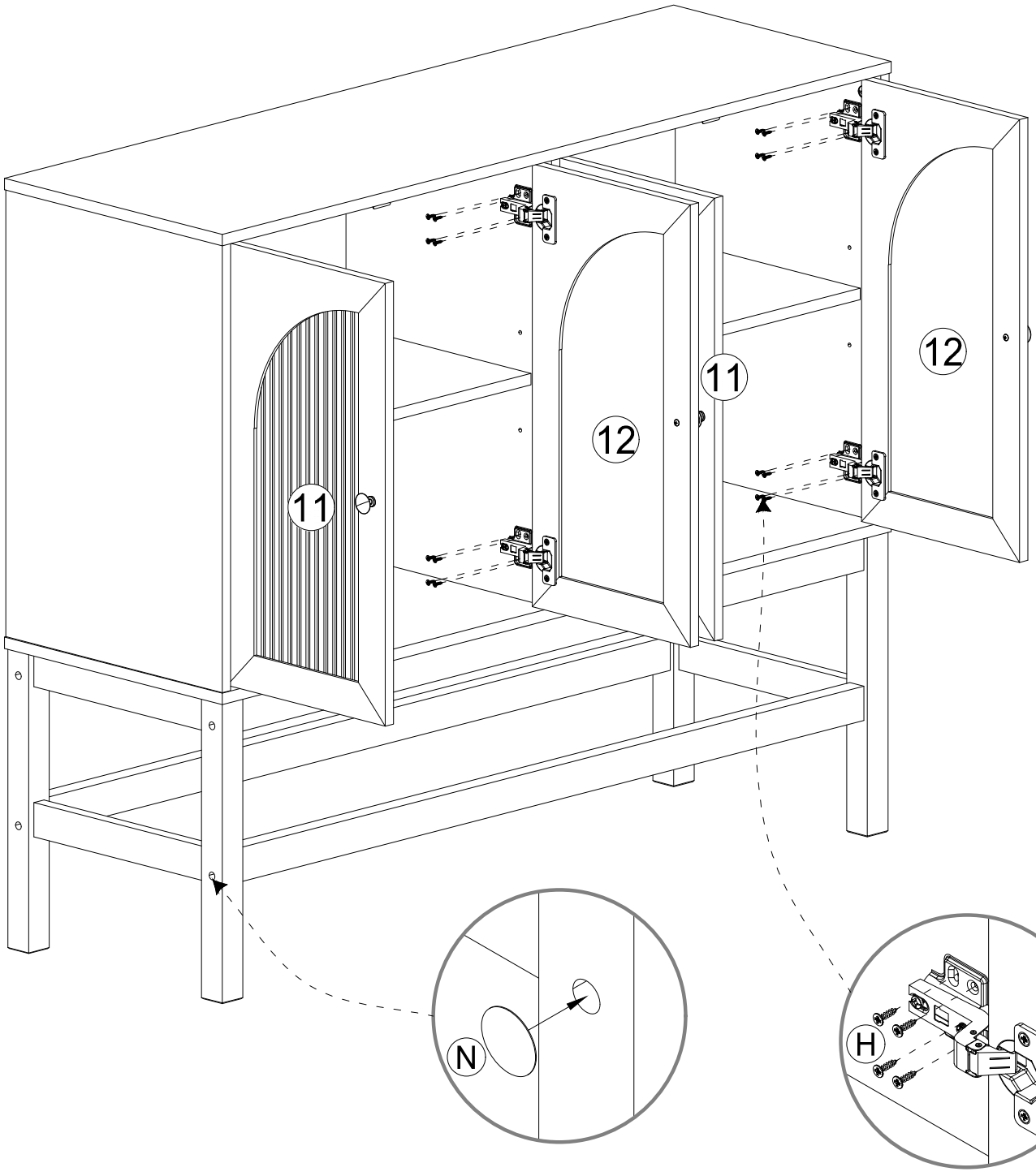

STEP15

SCHEMATIC DIAGRAM OF HINGE ADJUSTMENT DOOR PANEL GAP

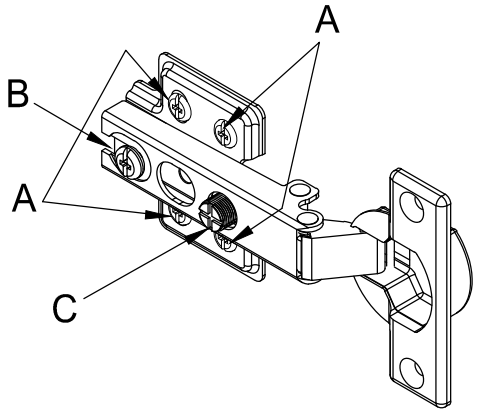

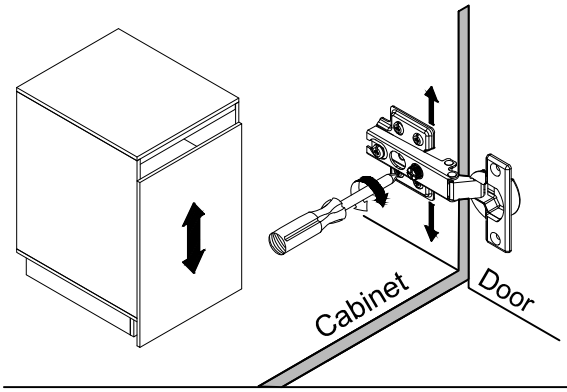

To adjust the vertical height.
Loosen the four screws "A" on both hinges. Two of them are usually in slotted holes which allows you to adjust up or down by a few mm. Then tighten back up.

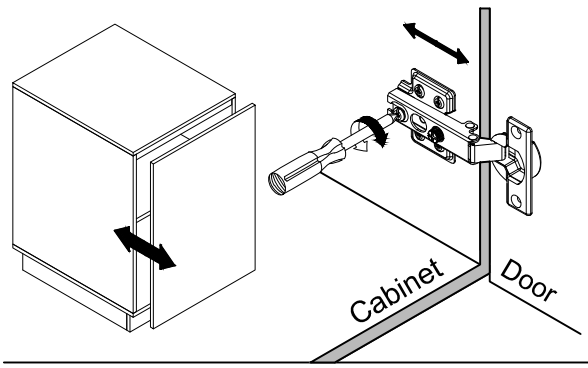

To adjust depth.
Loosen screw "B" and adjust door, if the door can not be adjusted, please loosen screw "C", then try again. Tighten screw "B" and "C".

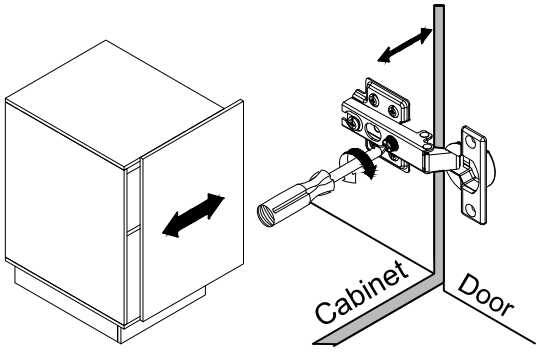

To adjust side ways.
Turning the screw "C" on BOTH hinges on each door.

⚠ WARNING


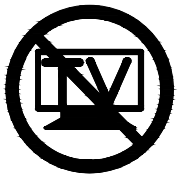

Children have died from furniture tipover. To reduce the risk of furniture tipover:

- ALWAYS install anti-tip device provided.
- NEVER put a TV on this product.
- NEVER allow children to stand, climb or hang on drawers, doors, or shelves.
- NEVER open more than one drawer at a time.
- Place heaviest items in the lowest drawers.

This is a permanent label.
Do not remove!

⚠ AVERTISSEMENT


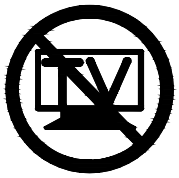

Des enfants sont décédés à cause du basculement du meuble. Pour réduire le risque de la chute du meuble :

- TOUJOURS installer le dispositif anti-basculement fourni.
- NE JAMAIS mettre un téléviseur sur ce produit.
- NE JAMAIS laisser les enfants se tenir debout, grimper ni s'accrocher sur les tiroirs, les portes ou les tablettes.
- NE JAMAIS ouvrir plus d'un tiroir à la fois.
- Placer les articles les plus lourds sur les tiroirs inférieurs.

Cette étiquette est permanente.
Ne pas retirer !

⚠ ADVERTENCIA


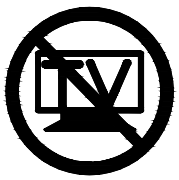

Los niños han muerto por el vuelco de los muebles. Para reducir el peligro de el mueble se vuelca:

- SIEMPRE instalar el dispositivo anti-volcadura suministrado.
- NUNCA ponga un televisor en este producto.
- NUNCA permita que los niños se paren, se suban o se cuelguen de los cajones, puertas o repisas.
- NUNCA abra más de un cajón a la vez.
- Coloque los artículos más pesados en los cajones inferiores.

Esta es una etiqueta permanente.
¡No quitar!