ASSEMBLY INSTRUCTIONS

SINGLE BED

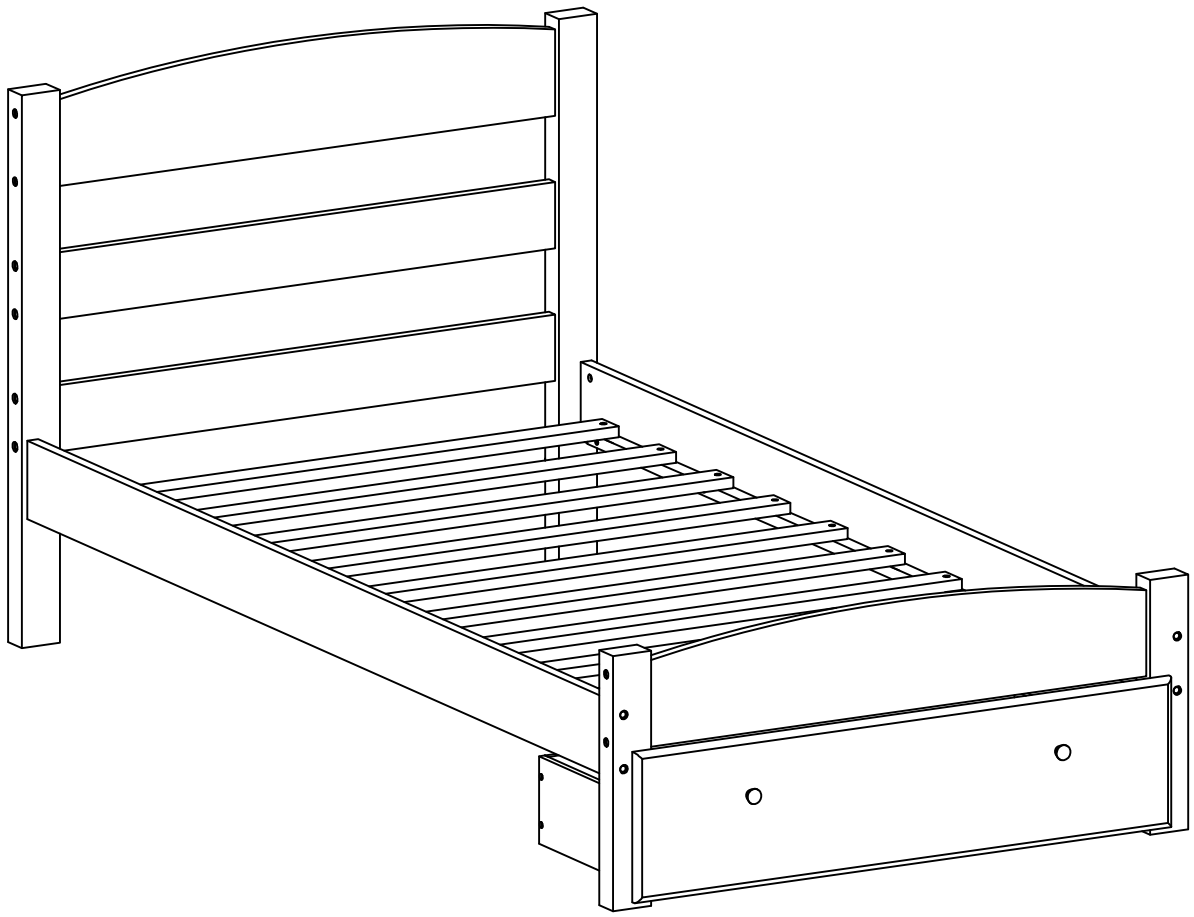

Detail View

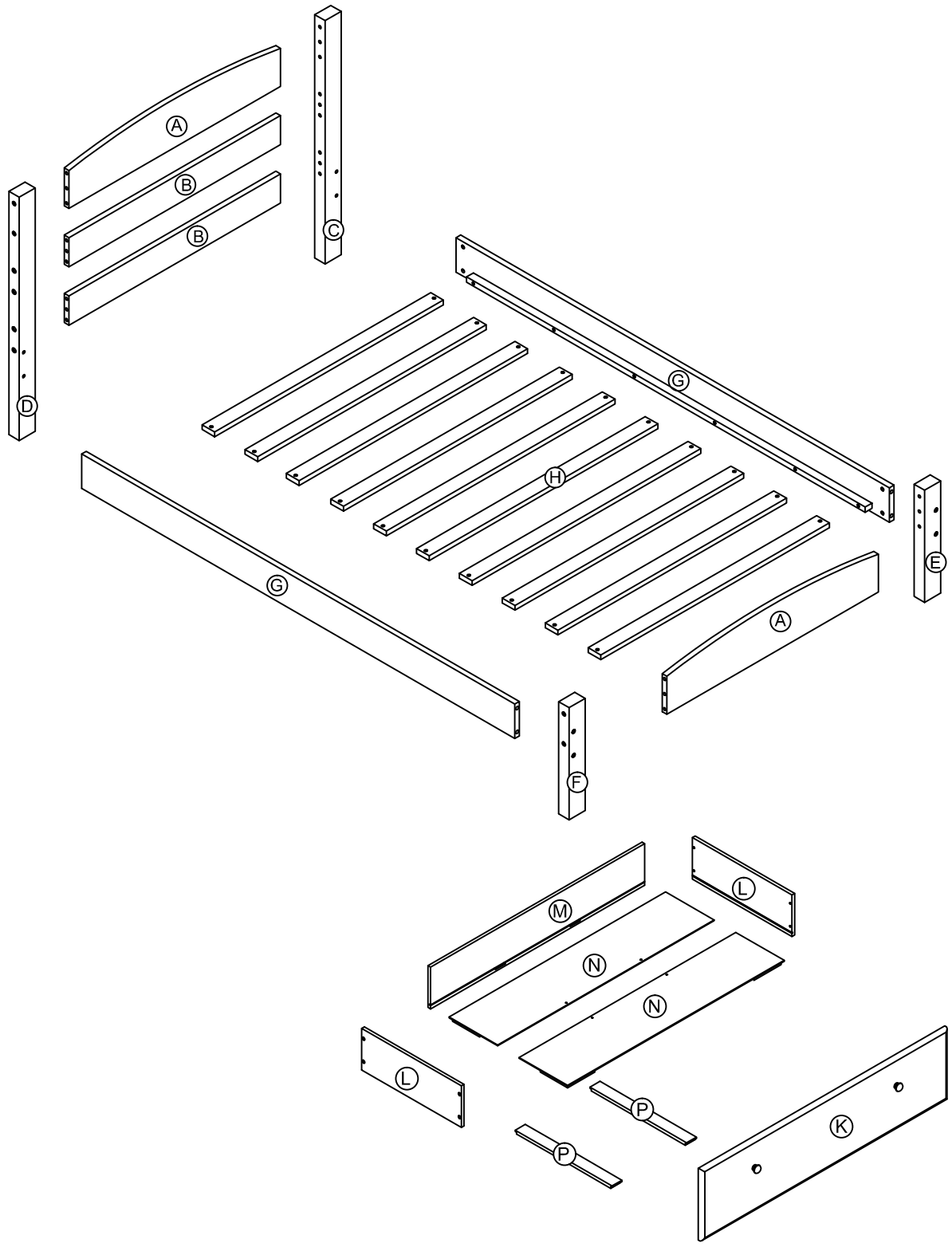

PART LISTS

A 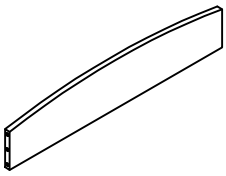	B 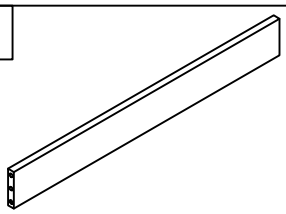	C 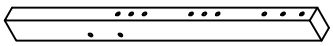
Headboard&footboard top rail 2pcs	Headboard Horizontal bar 2pcs	Headboard leg (left side) 1pc
D 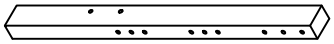	E 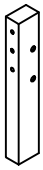	F 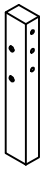
Headboard leg (Right side) 1pc	Footboard leg (left side) 1pc	Footboard leg (Right side) 1pc
G 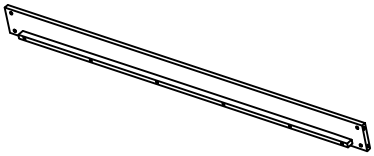	H 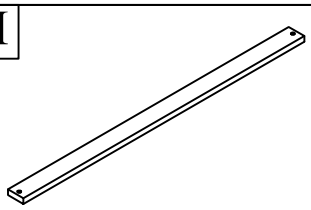	K 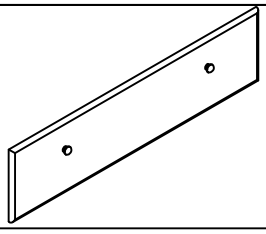
Side rail 2pcs	Slat 10pcs	Drawer Front 1pc
L 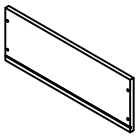	M 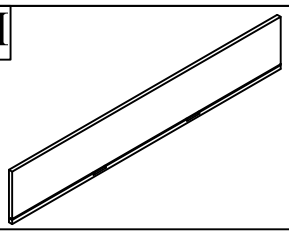	N 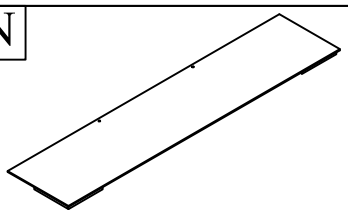
Drawer side panel 2pcs	Drawer back panel 1pc	Drawer bottom panel 2pcs
P 		
Drawer bottom support 2pcs		

HARDWARE LISTS

1 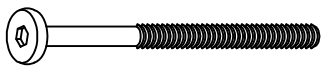	2 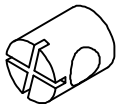	3 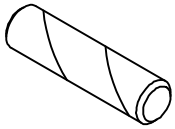
Long Bolt: 1/4" x 85mm (24pcs)	Hole bolt Ø 1/4"x15mm (8pcs)	Wood dower Ø10 x 30mm (12 pcs)
4 	5 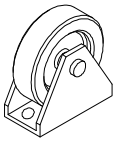	6 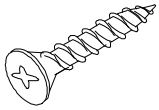
Screw #8 x 30mm (20 pcs)	Wheel 4 pcs	Screw Ø3 x 15mm (12 pcs)
7 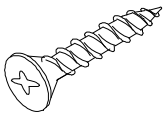	8 	9 
Screw Ø4 x 25mm (8 pcs)	Allen key 4mm (1pc)	Bolt 3/16" x 25mm (2pcs)
10 		
Handle (2pcs)		

ASSEMBLY SCREW DRIVER REQUIRED (NOT INCLUDED)

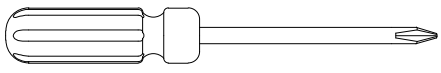

STEP 1

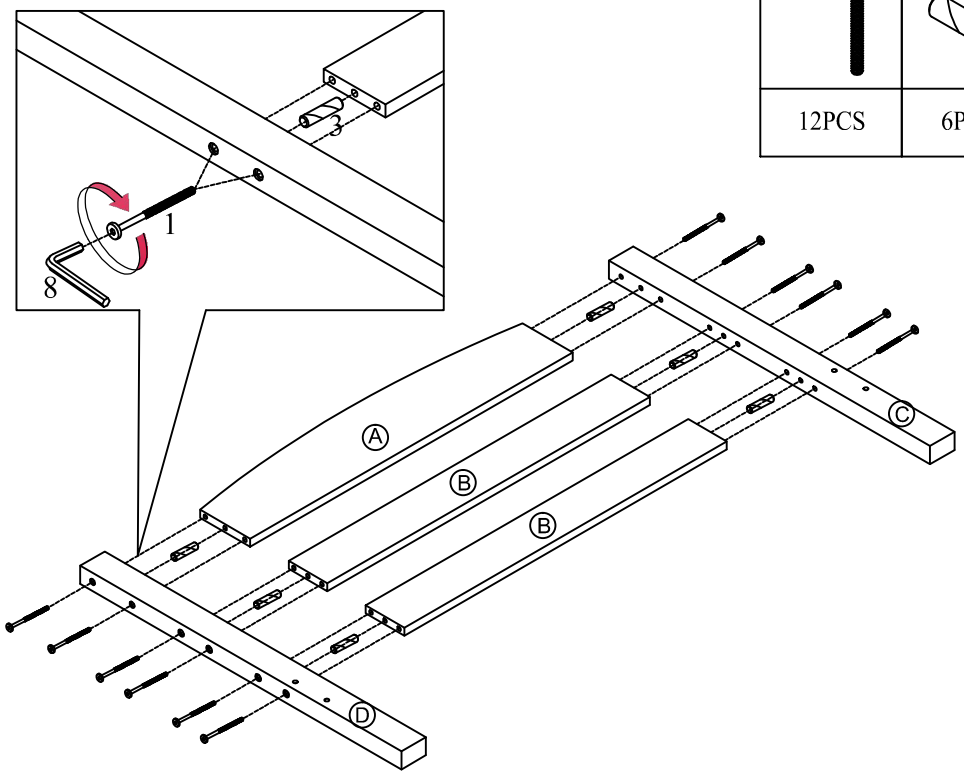

STEP 2

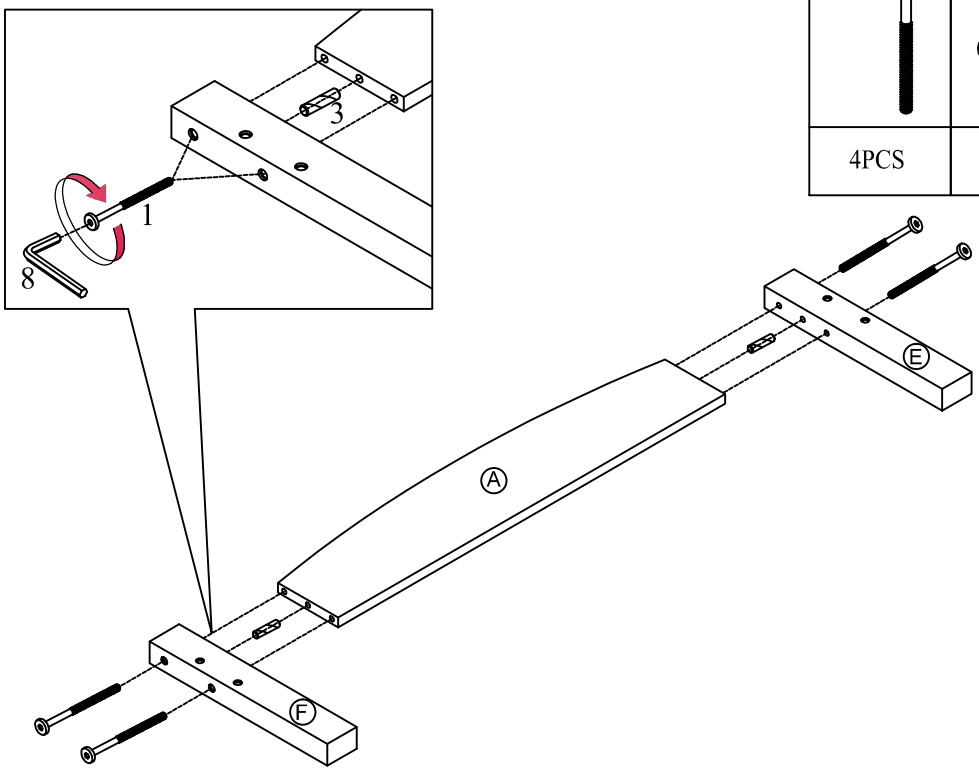

STEP 3

1	2	3
		
8PCS	8PCS	4PCS

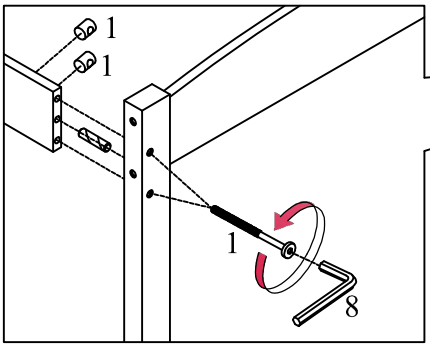

STEP 4

4

20PCS

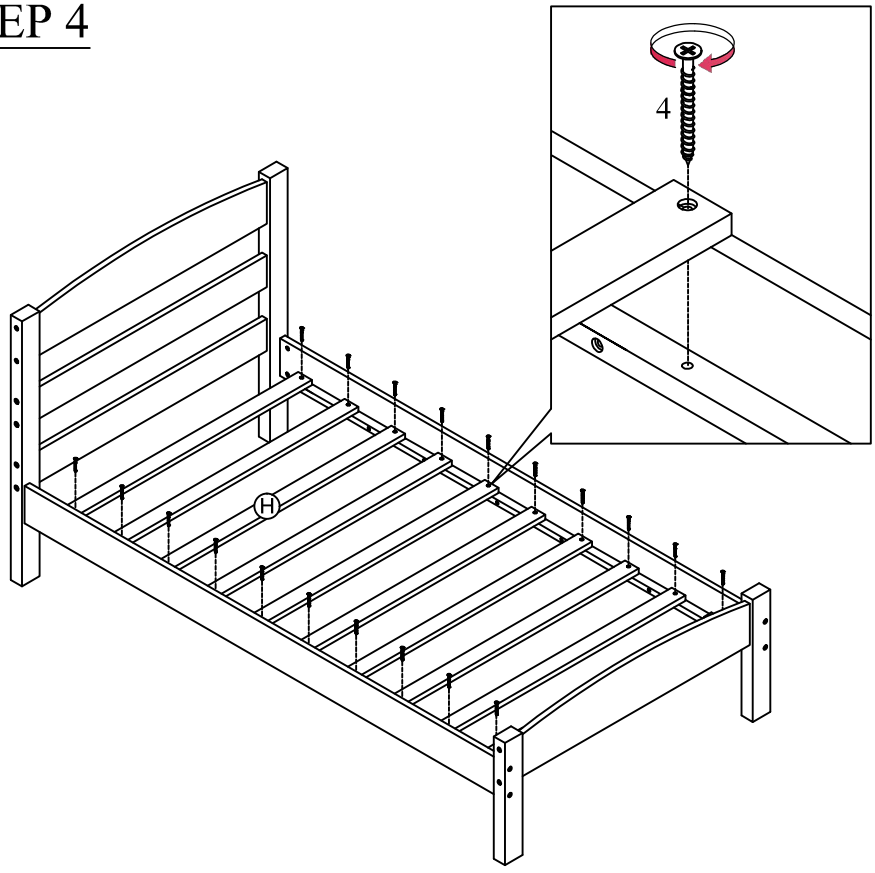

STEP 5

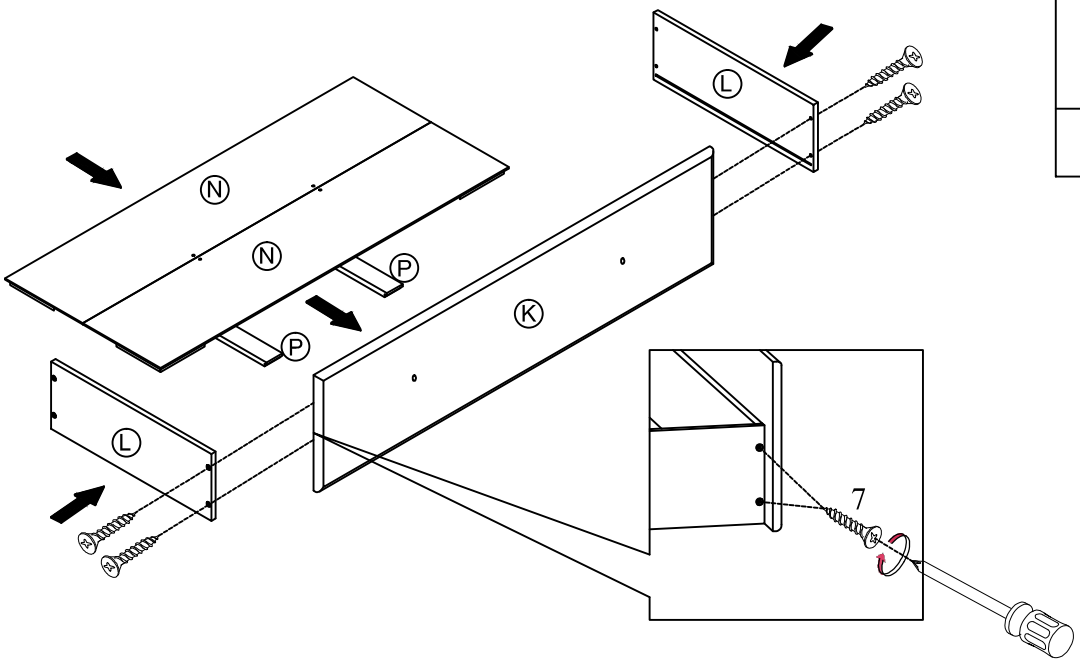

7

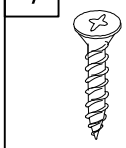

4PCS

STEP 6

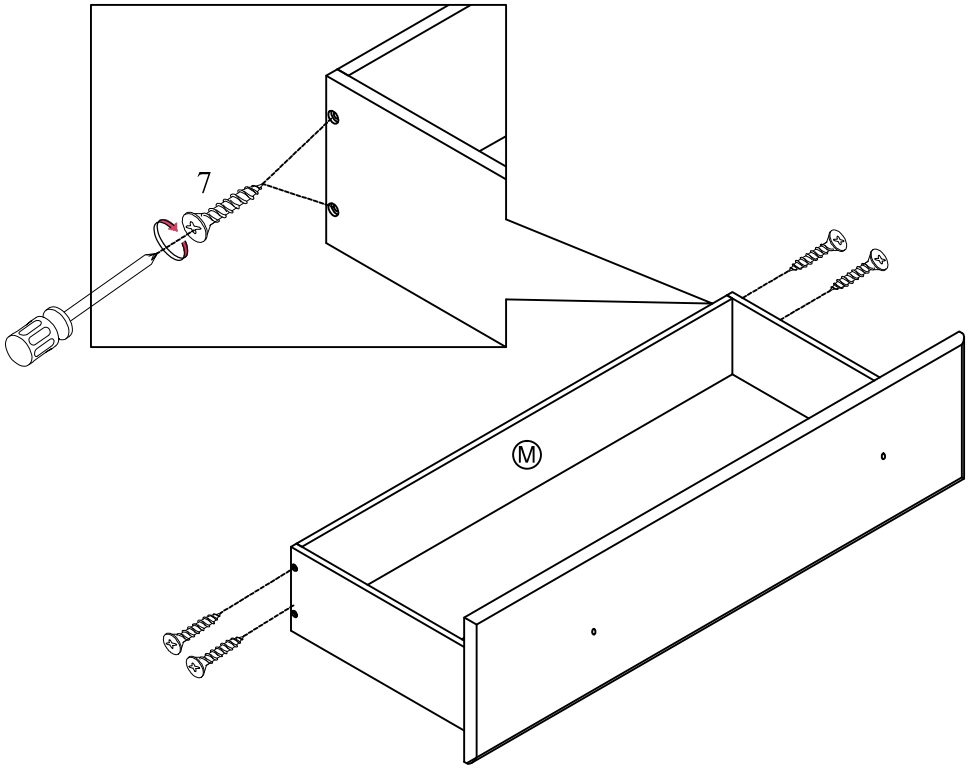

7

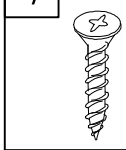

4PCS

STEP 7

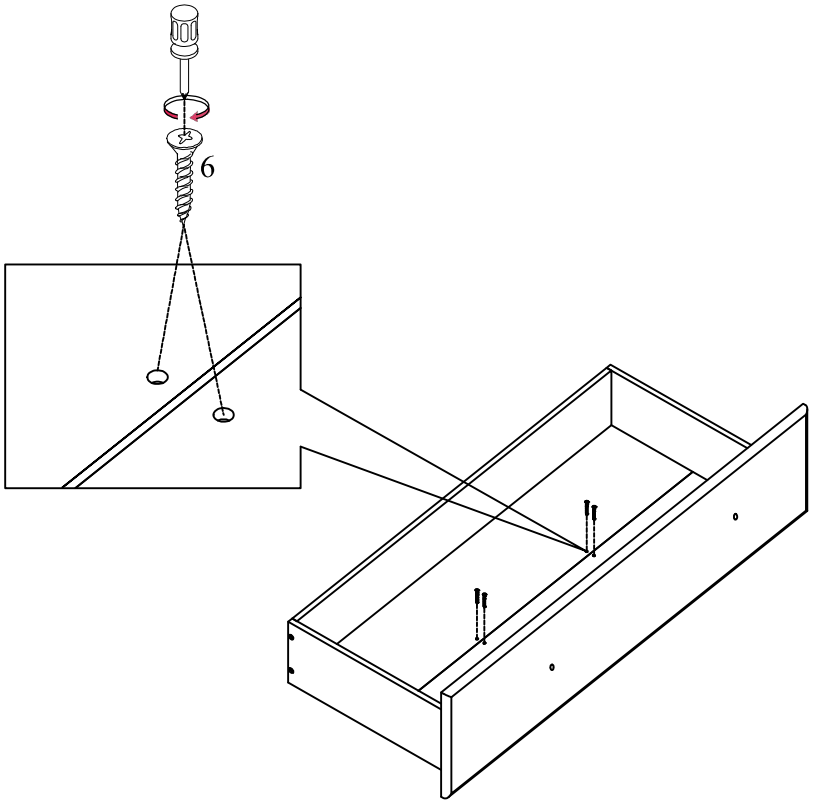

6
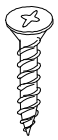
4PCS

STEP 8

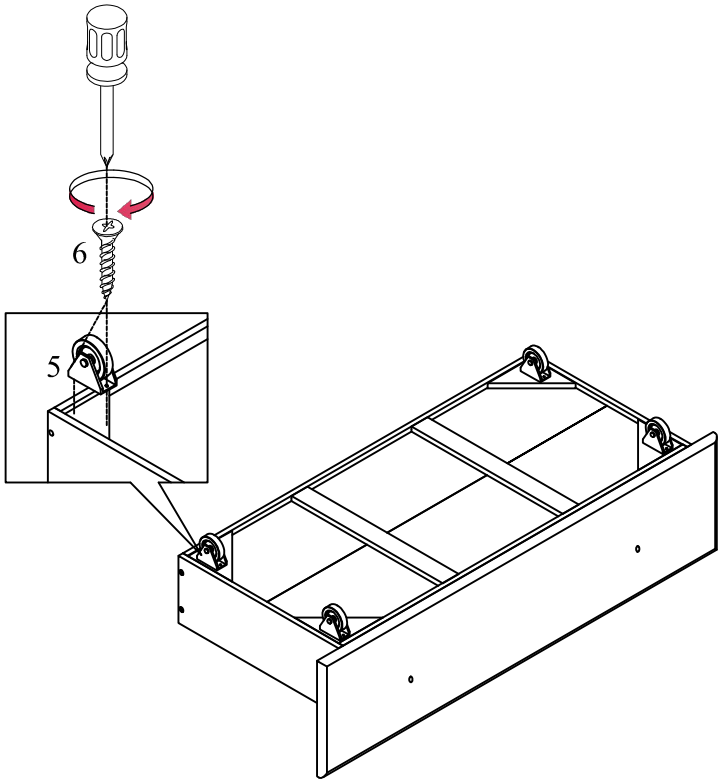

5	6
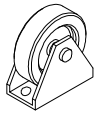	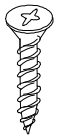
4PCS	8PCS

STEP 9

9	10
	
2PCS	2PCS

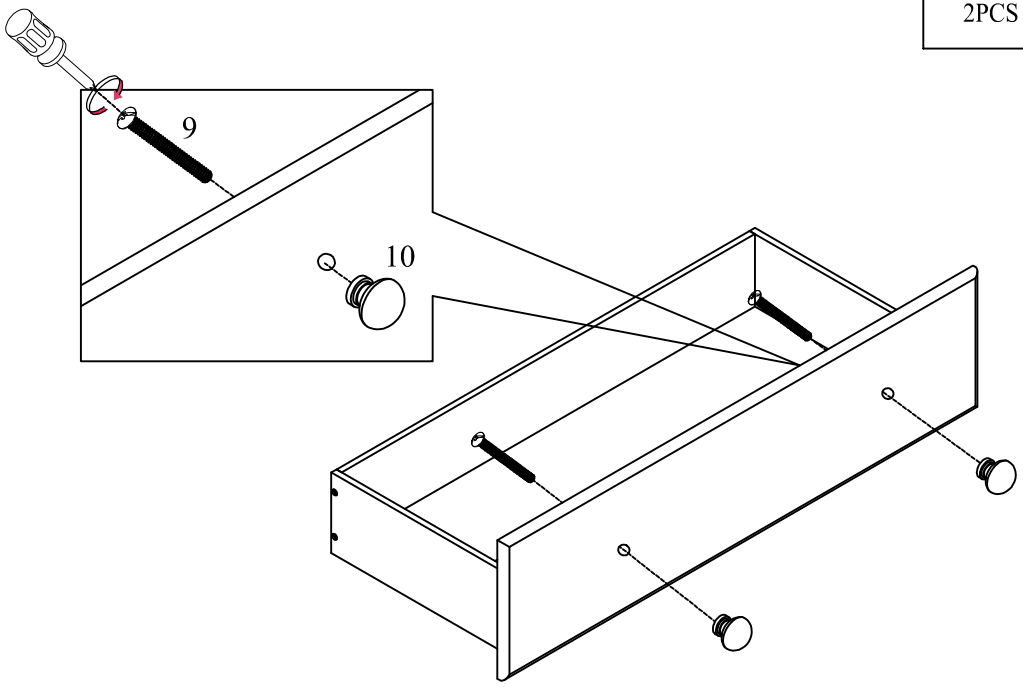

STEP 10

