ASSEMBLY INSTRUCTION

Minimum no. 2 of people recommended to assemble this product: Approx. assembly time: 60 mins

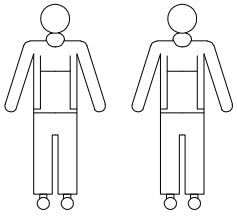

ASSEMBLY INSTRUCTION

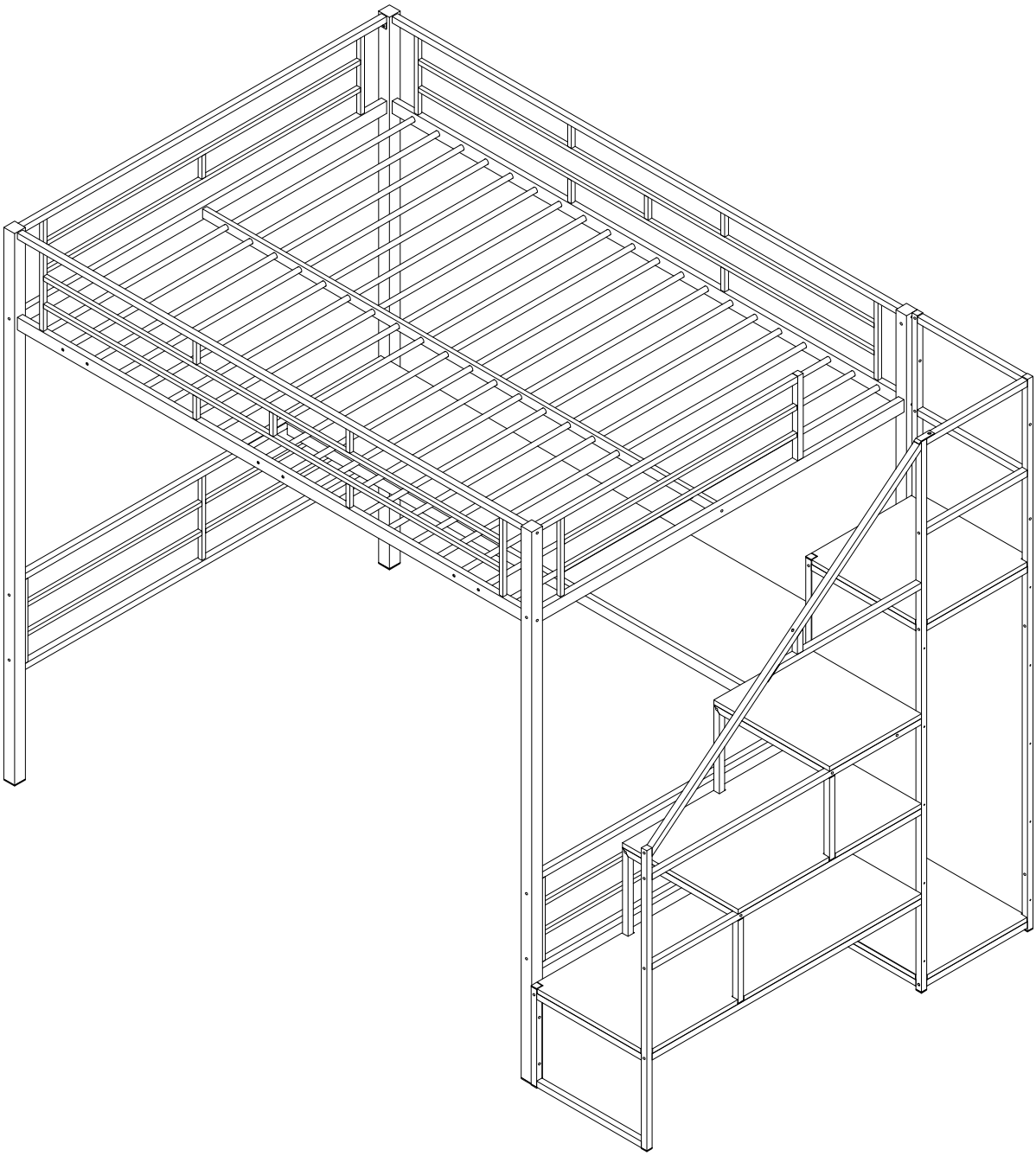

Minimum no. 2 of people recommended to assemble this product: Approx. assembly time: 60 mins

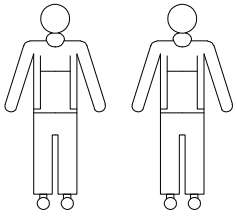

SAFETY WARNING

1. This bed is designed for use only mattress(es) meeting the following specIfications on the upper bunk
Upper bunk

Bed type	Length	Width	Thickness
Full Standard	74"- 75"	53"- 54"	6" Max

2. Replacement parts,Including additional guardralls,maybe obtained from any for our dealers
3. Follow the Information on the warnings appearing on the upper bunk bed end structure and on the carton.Do not remove warning label from bed.
4. Always use the recommended size mattresses or mattress supports, or both, to help prevent the likelihood of entrapment or falls.
5. Surface of mattress must be at least 5"(127mm) below the upper edge of guardrails .
6. Do not allow children under 6 years of age to use the upper bunk.
7. Periodically check and ensure that the guardrail , ladder , and other components are in their proper position ,free from damage , and that all connectors are tight .
8. Do not allow horseplay on or under the bed and prohibit Jumping on the bed .
9. Always use the ladder for entering and leaving the upper bunk .
10. Do not use substitute part . Contact the manufacturer or dealer for replacement part .
11. Use of a night light may provIde added safety precaution for a child using the upper bunk .
12. Always use guardrails on both long sides of upper bunk . If the bunk bed will be placed next to the wall , the guardraI that runs the full length of the bed should be placed agaInst the wall to prevent entrapment between the bed and wall .
13. The use of water or sleep flotation mattresses is prohibited .
14. STRANGULATION HAZARD - Never attach or hang Items to any part of the bunk bed that are not designed for use with the bed ; for example , but not limited to , hook , belts and Jump ropes .
15. Keep these Instruction for future reference .
16. Prohibit more than one person on upper bunk
17. We recommend assembling your bunk bed on the shipping carton to protect your floor or carpet
18. Be certain all staples are out the box before beginning assembly on the shipping carton .

PART LIST

1 1PC	2 1PC	3 1PC
4 1PC	5 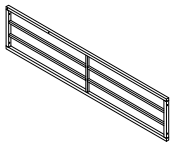 2PCS	6 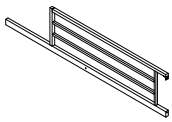 1PC
7 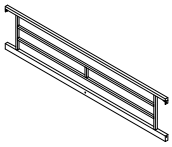 1PC	8 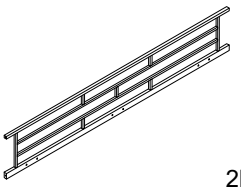 2PCS	9 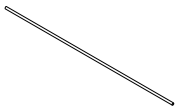 14PCS
10 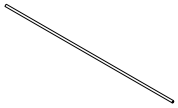 6PCS	11 1PC	12 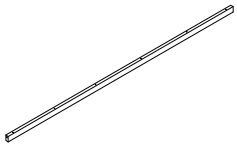 2PCS
25 1PC	32 1PC	

HARDWARE LIST

A 20PCS $M\frac{1}{4}$'X50	B 45PCS $M\frac{1}{4}$'X35	C 25PCS $M\frac{1}{4}$'X15	D 2PCS 20x20
E 1PC M4X23X57	F 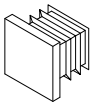 4PCS #40x40x16	G 12PCS M4x50	H 54PCS M4x30
i Not included 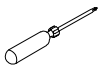 1PC	j 8PCS #20x20x13		

PART LIST

15 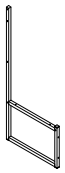 1PC	16 1PC	17 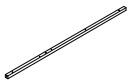 2PCS
18 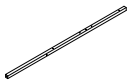 1PC	19 1PC	20 1PC
21 1PC	22 1PC	23 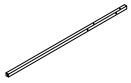 1PC
24 1PC	26 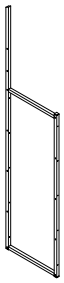 1PC	27 2PCS
28 2PCS	29 1PC	30 1PC
31 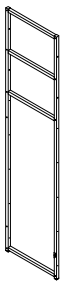 1PC	33 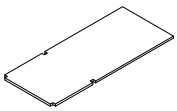 1PC	34 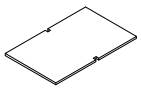 1PC
35 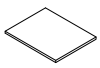 1PC	36 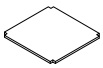 1PC	37 1PC
38 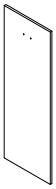 2PCS	13 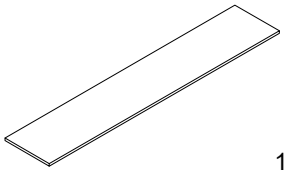 1PC	

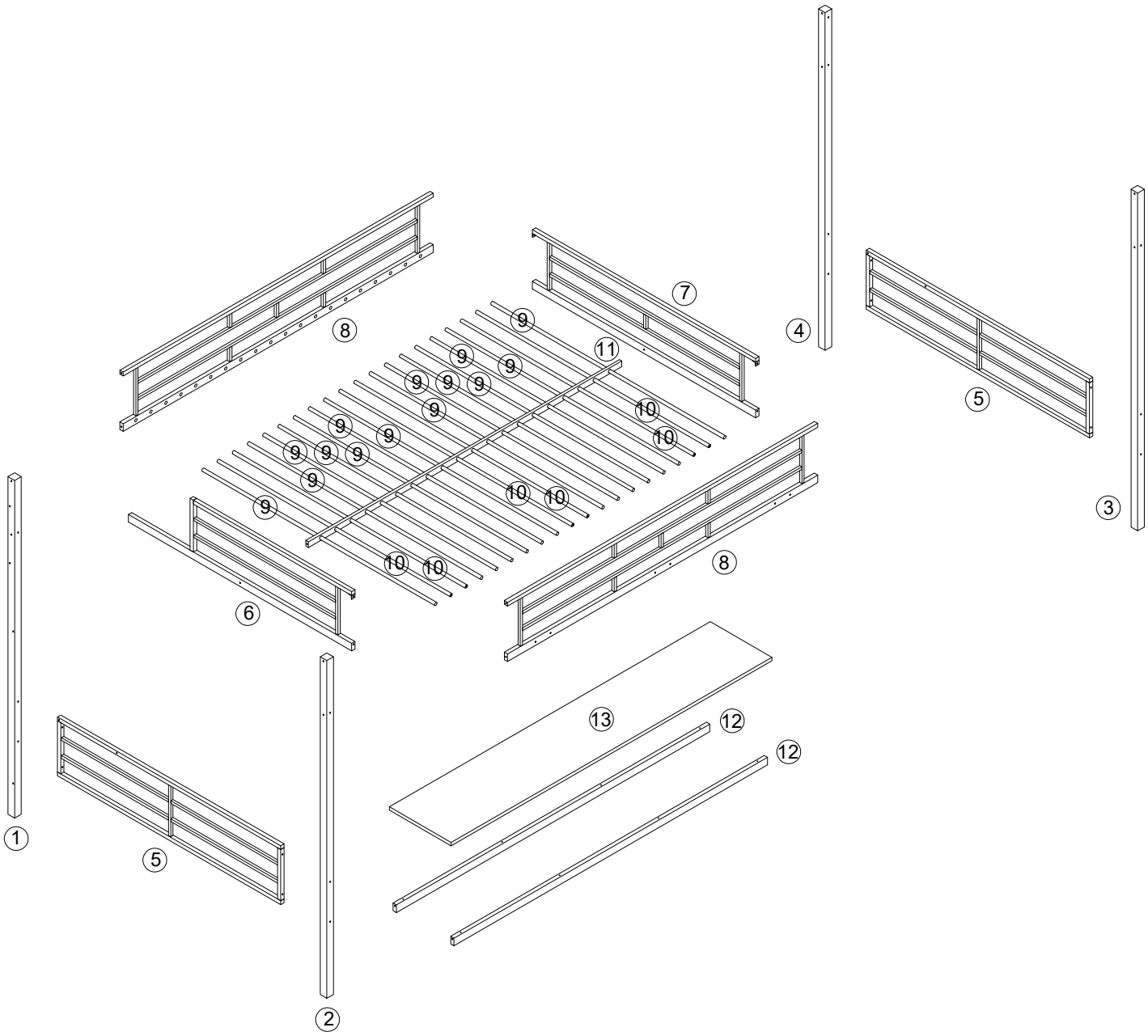
8
7
4
5
3
9
11
10
6
8
13
12
12
1
5
2

STEP 1

A	C	F
M$\frac{1}{4}$'x50	M$\frac{1}{4}$'x15	#40x40x16
6 PCS	1 PC	2 PCS

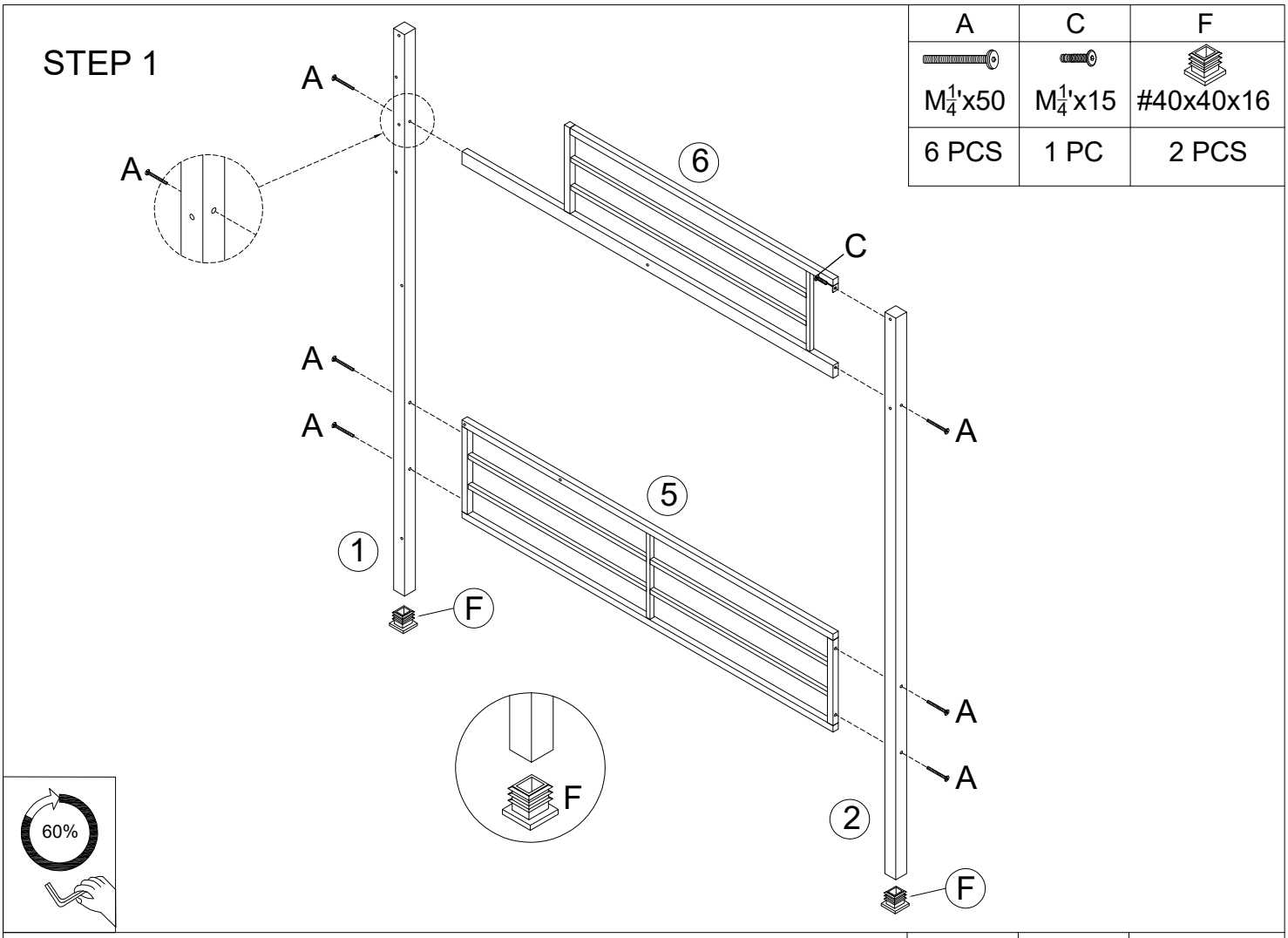

STEP 2

A	C	F
M$\frac{1}{4}$'x50	M$\frac{1}{4}$'x15	#40x40x16
6 PCS	2 PCS	2 PCS

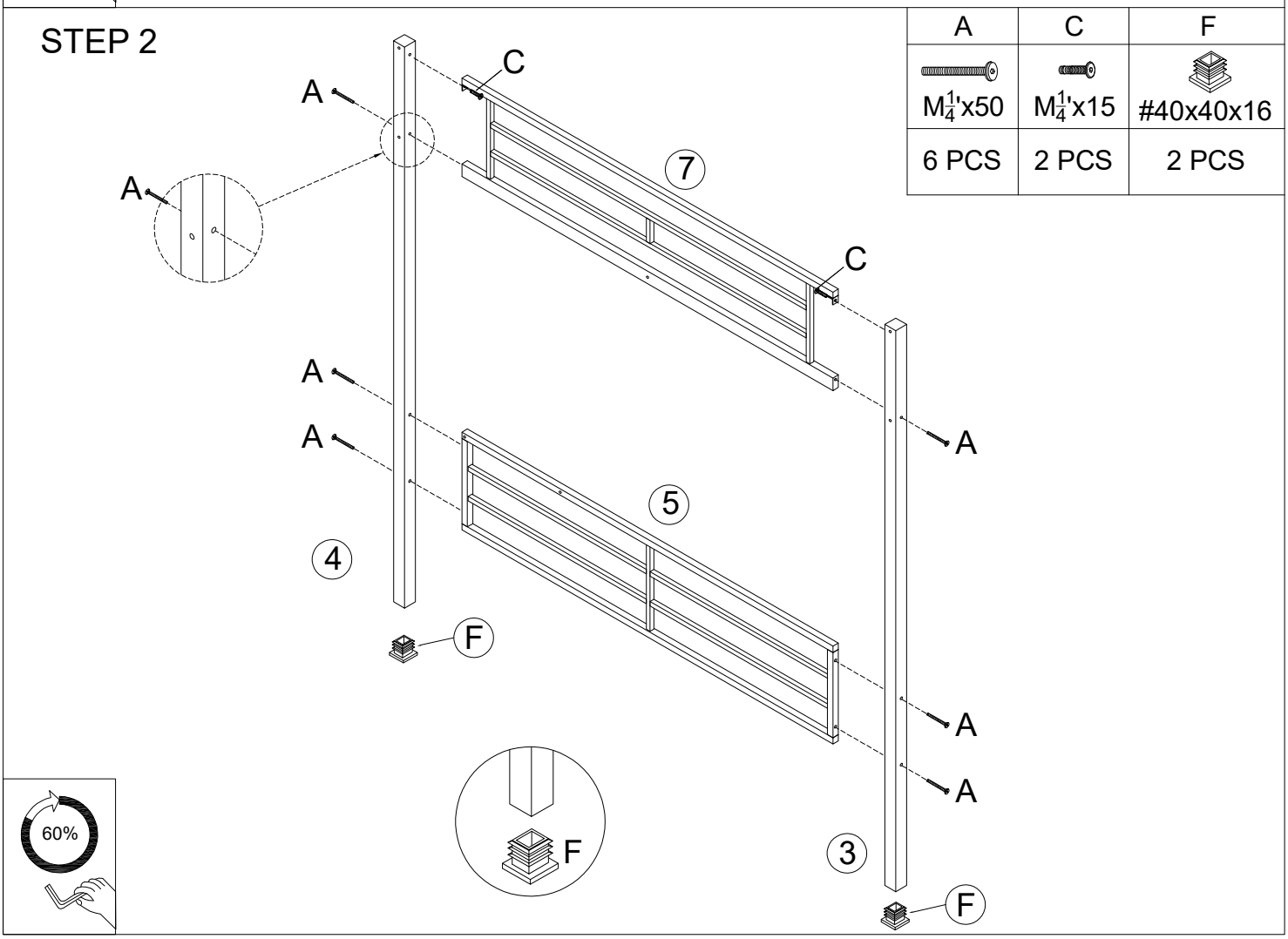

STEP 3

C
$M\frac{1}{4}$'x15
12 PCS

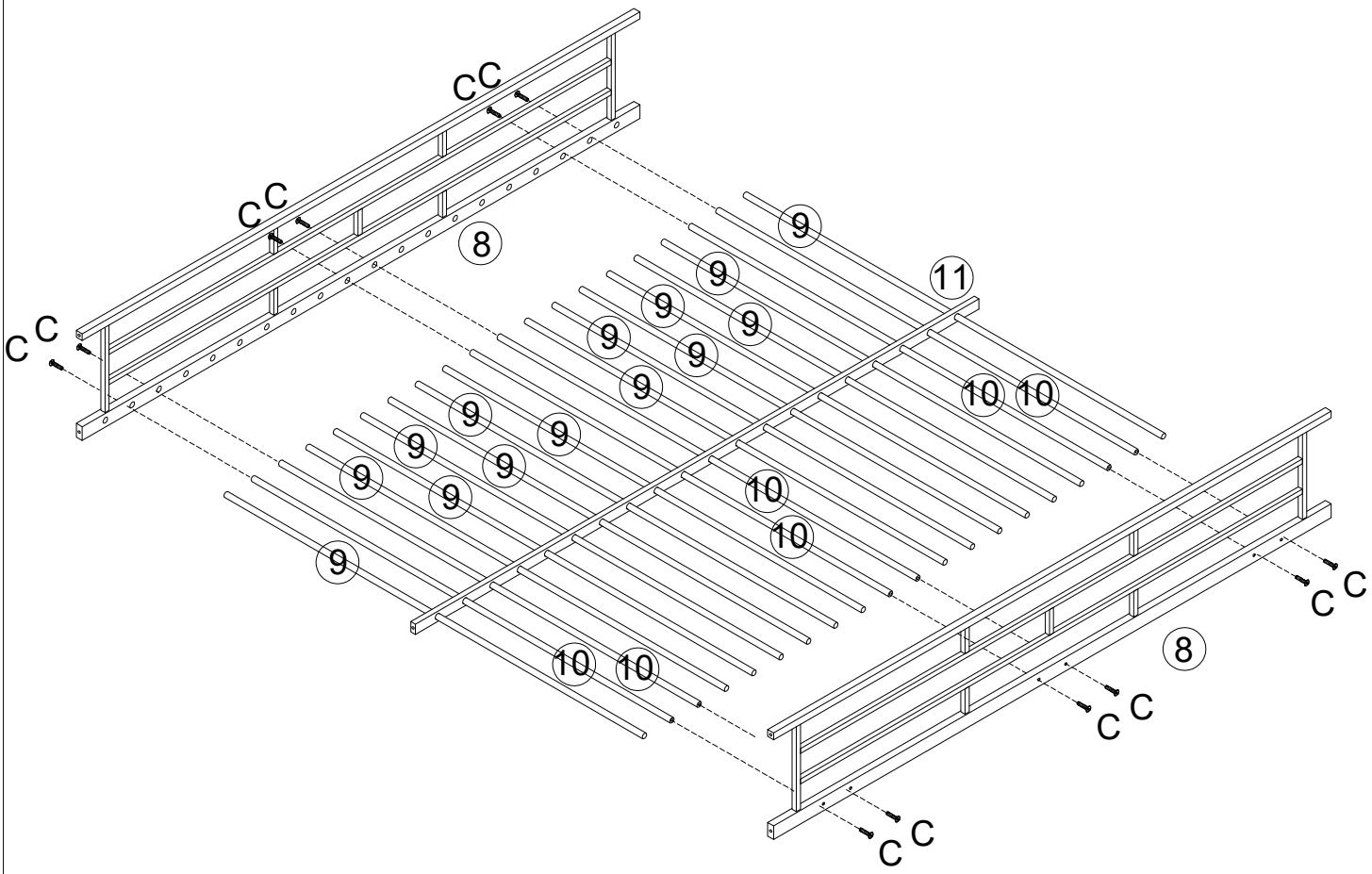

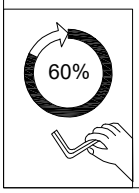

STEP 4

A	B
M$\frac{1}{4}$'x50	M$\frac{1}{4}$'x35
8 PCS	6 PCS

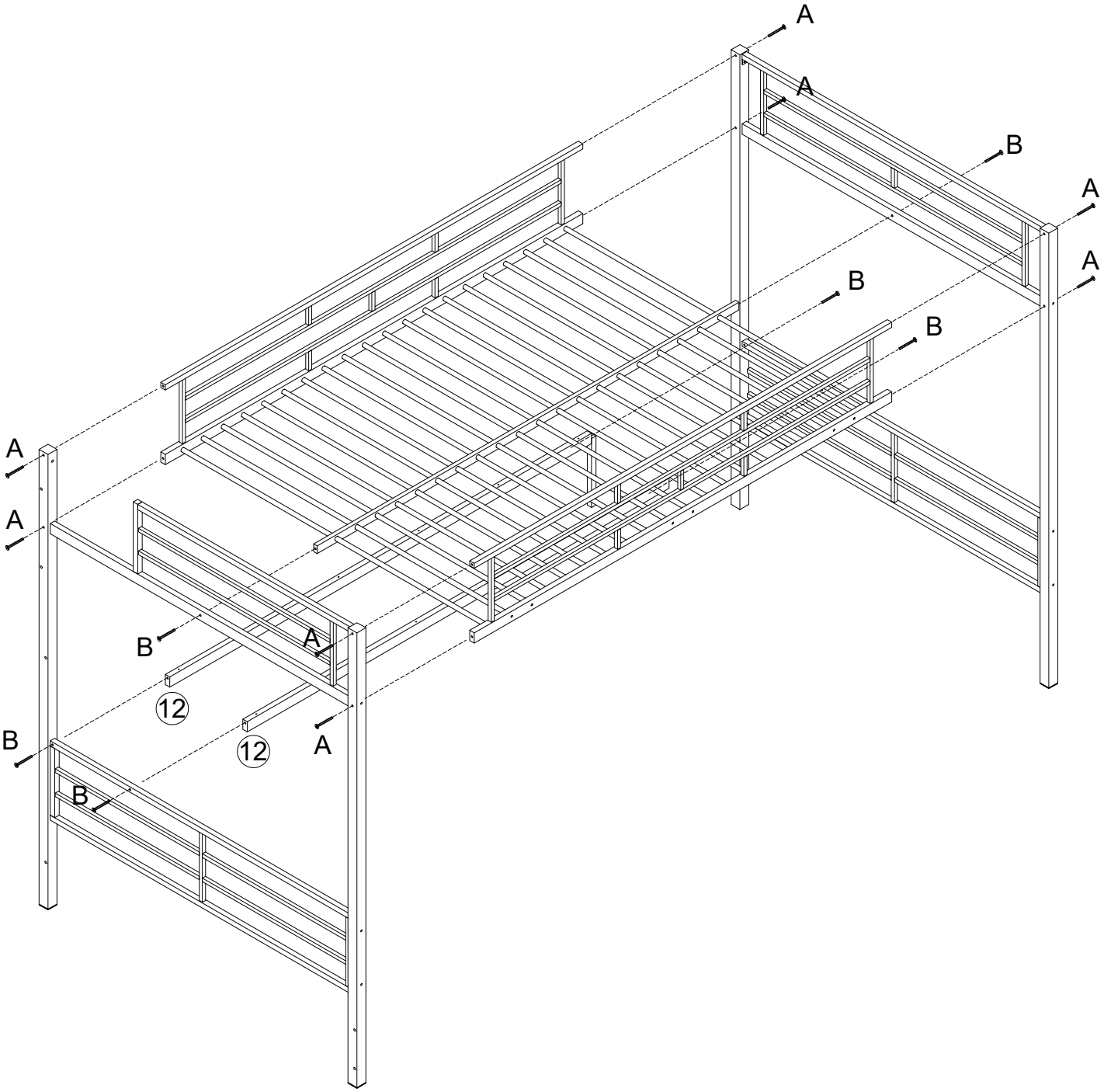

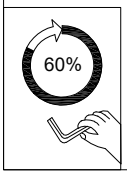

STEP 5

G
M4x50
12 PCS

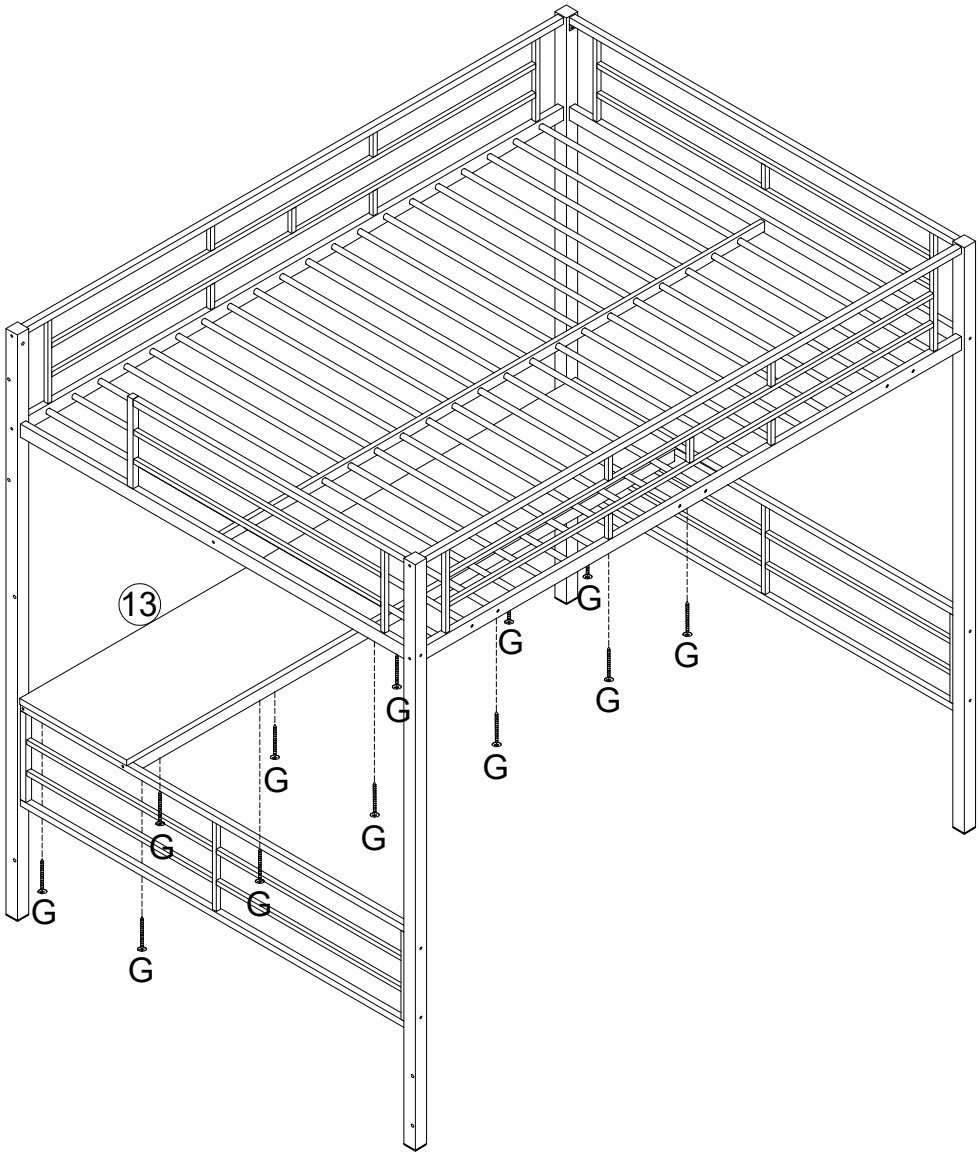

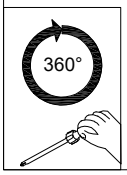

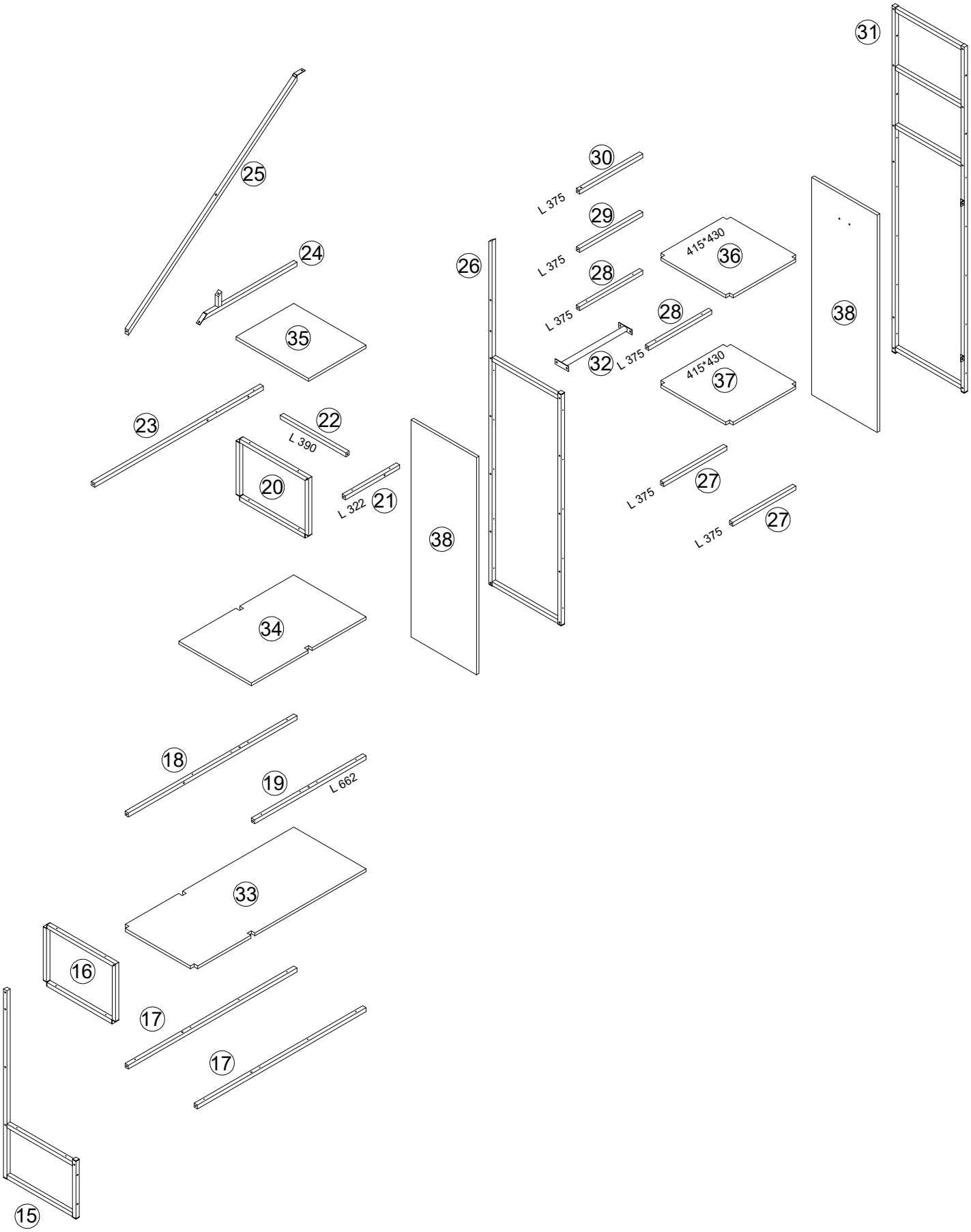
31
25
30
L 375
29
L 375
24
26
415*430
36
28
L 375
38
28
35
32
L 375
415*430
37
23
22
L 390
20
L 322
21
38
L 375
27
L 375
27
34
18
19
L 662
33
16
17
17
15

STEP 6

B
M$\frac{1}{4}$'x35
12 PCS

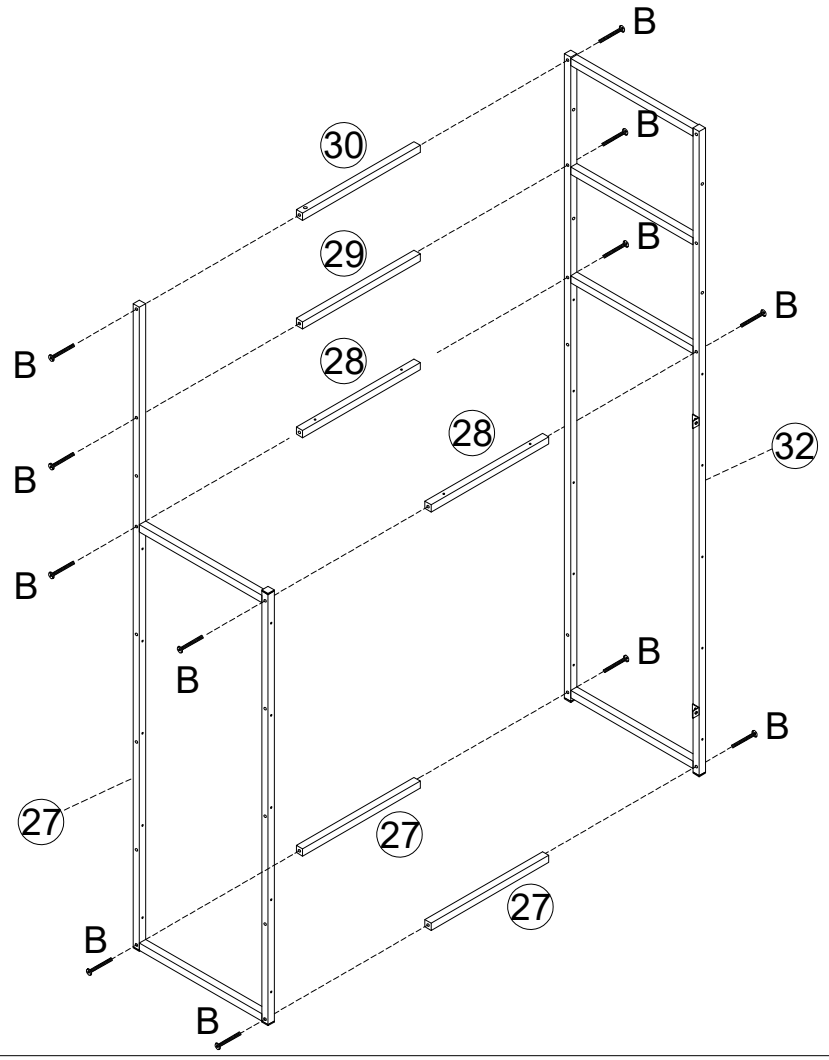

STEP 7

C	H
M$\frac{1}{4}$'x15	M4x30
4 PCS	24 PCS

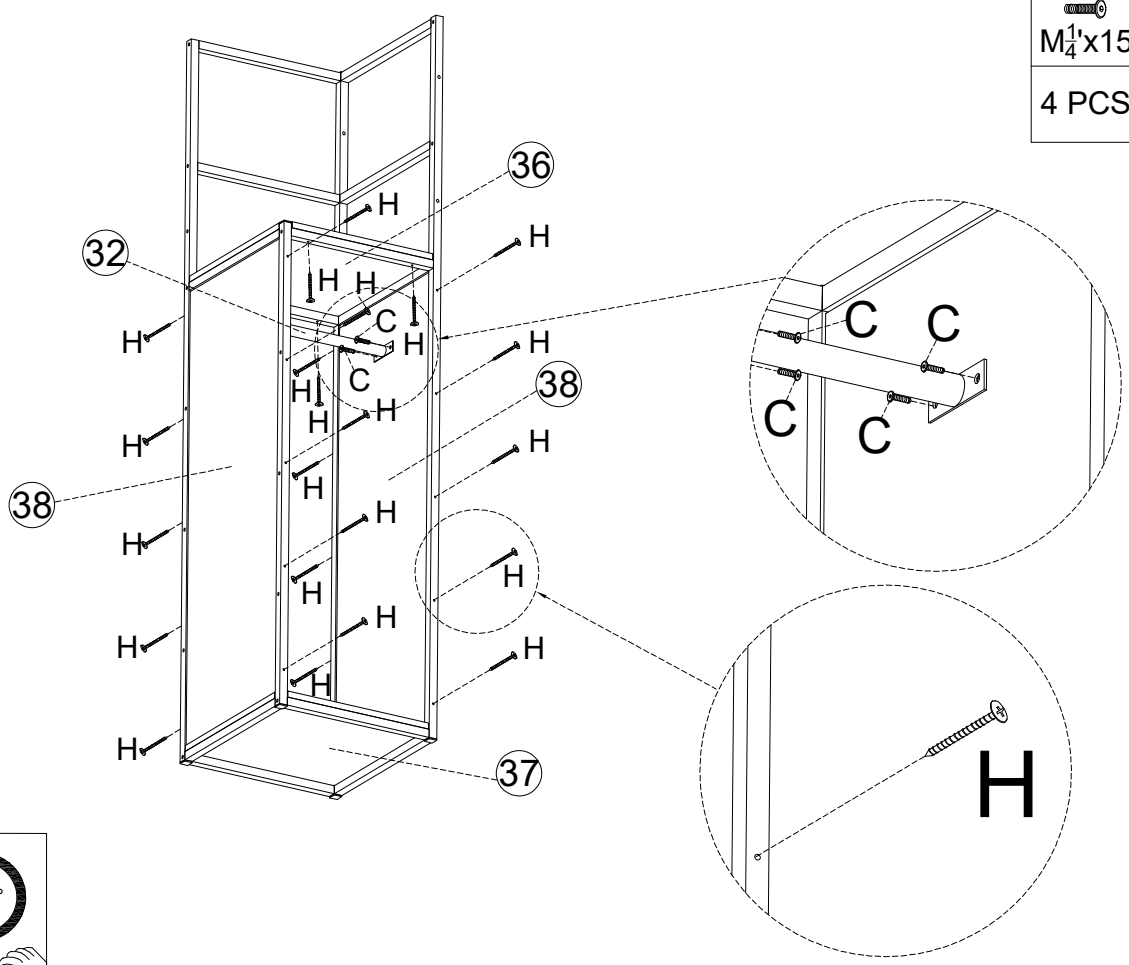

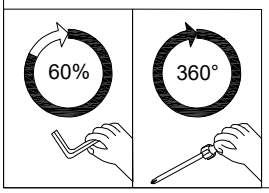

STEP 8

B	C
M$\frac{1}{4}$'x35	M$\frac{1}{4}$'x15
14 PCS	2 PCS

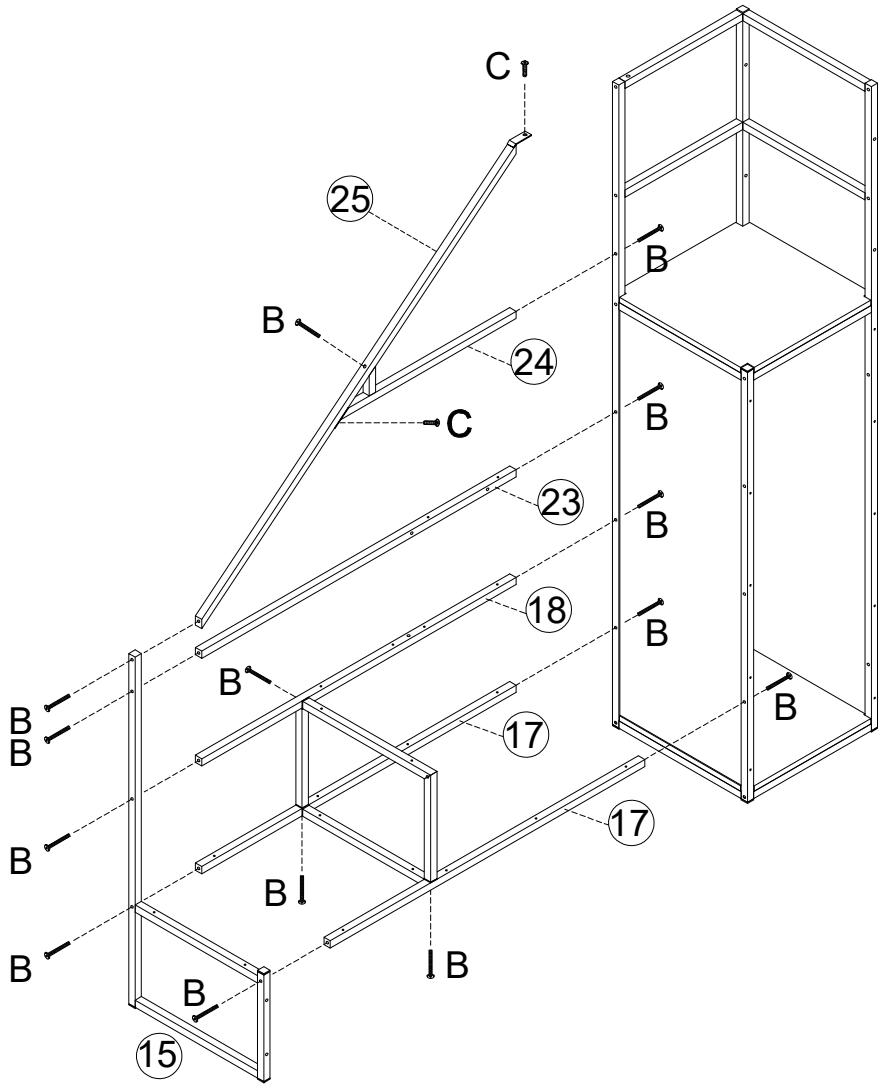

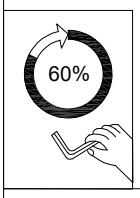

STEP 9

B
M$\frac{1}{4}$'x35
9 PCS

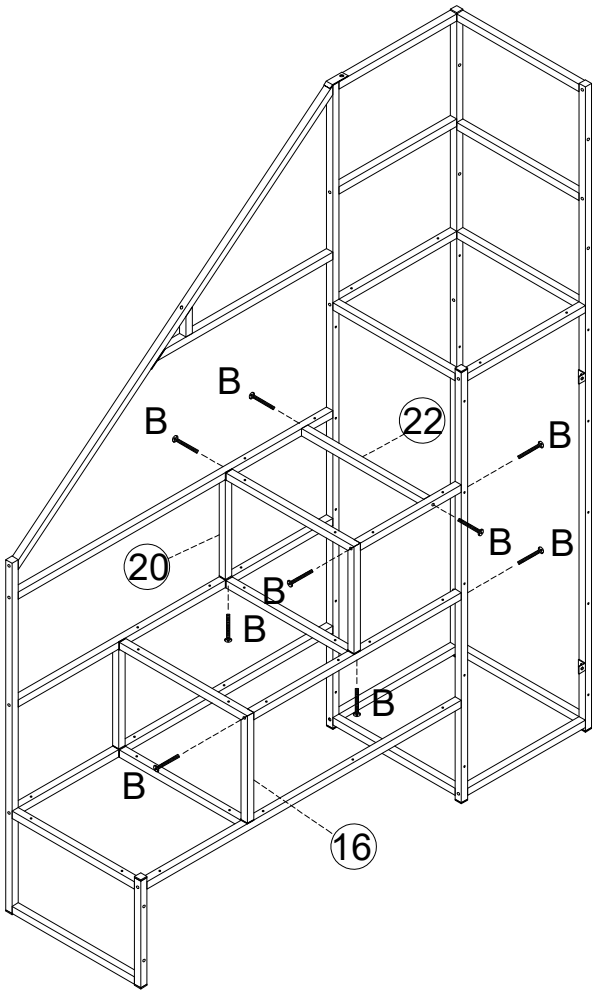

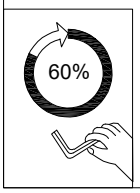

STEP 10

C	H	D	j
M$\frac{1}{4}$'x15	M4x30	20x20	#20x20x13
2 PCS	30 PCS	2 PCS	8 PCS

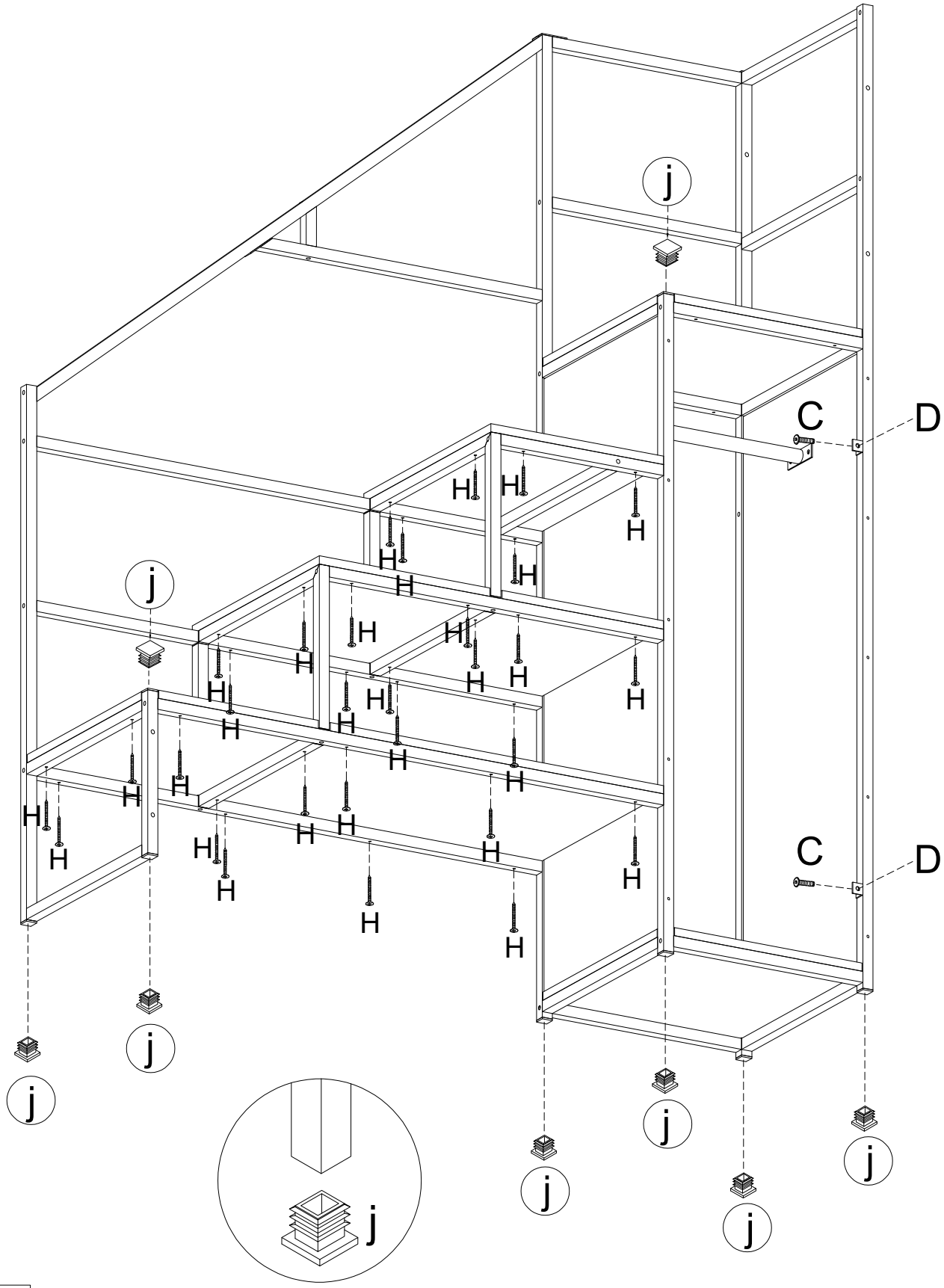

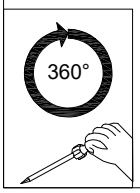

STEP 11

B	C
M$\frac{1}{4}$'x35	M$\frac{1}{4}$'x15
4 PCS	2 PCS

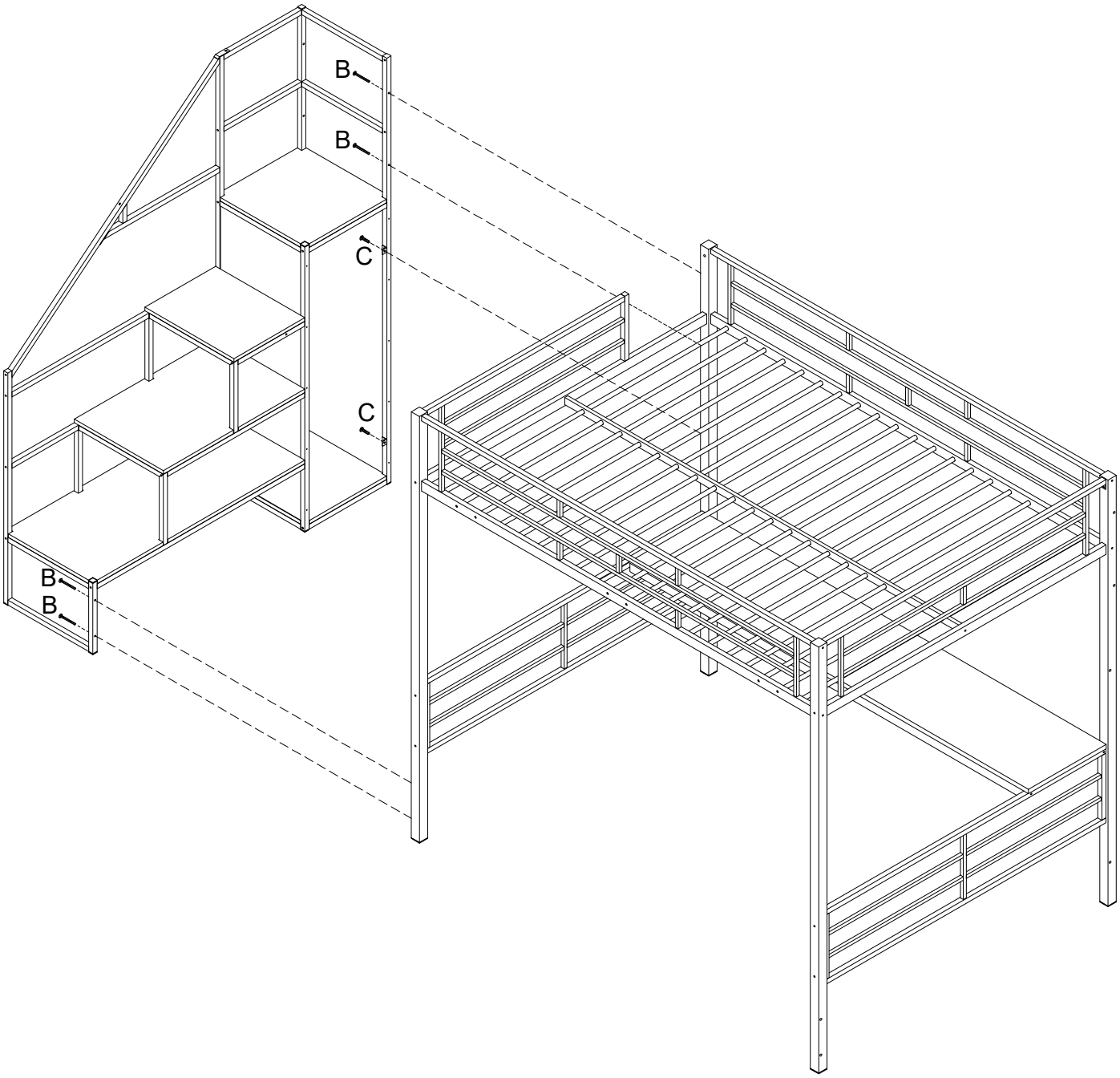

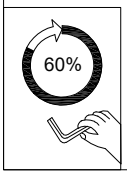

STEP 4

A	B
M$\frac{1}{4}$'x50	M$\frac{1}{4}$'x35
8 PCS	6 PCS

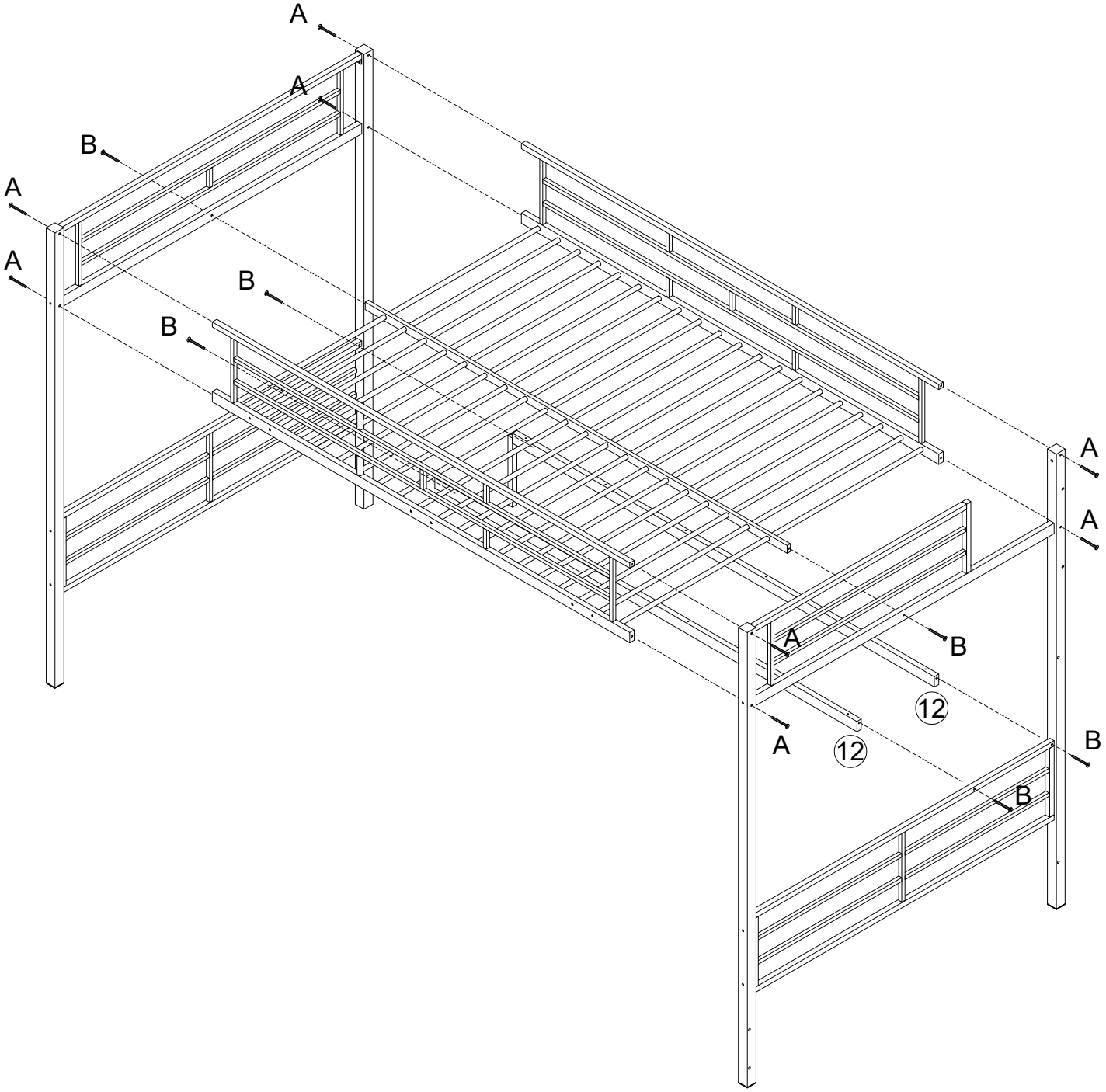

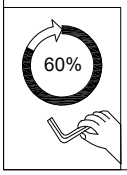

STEP 11

B	C
M$\frac{1}{4}$'x35	M$\frac{1}{4}$'x15
4 PCS	2 PCS

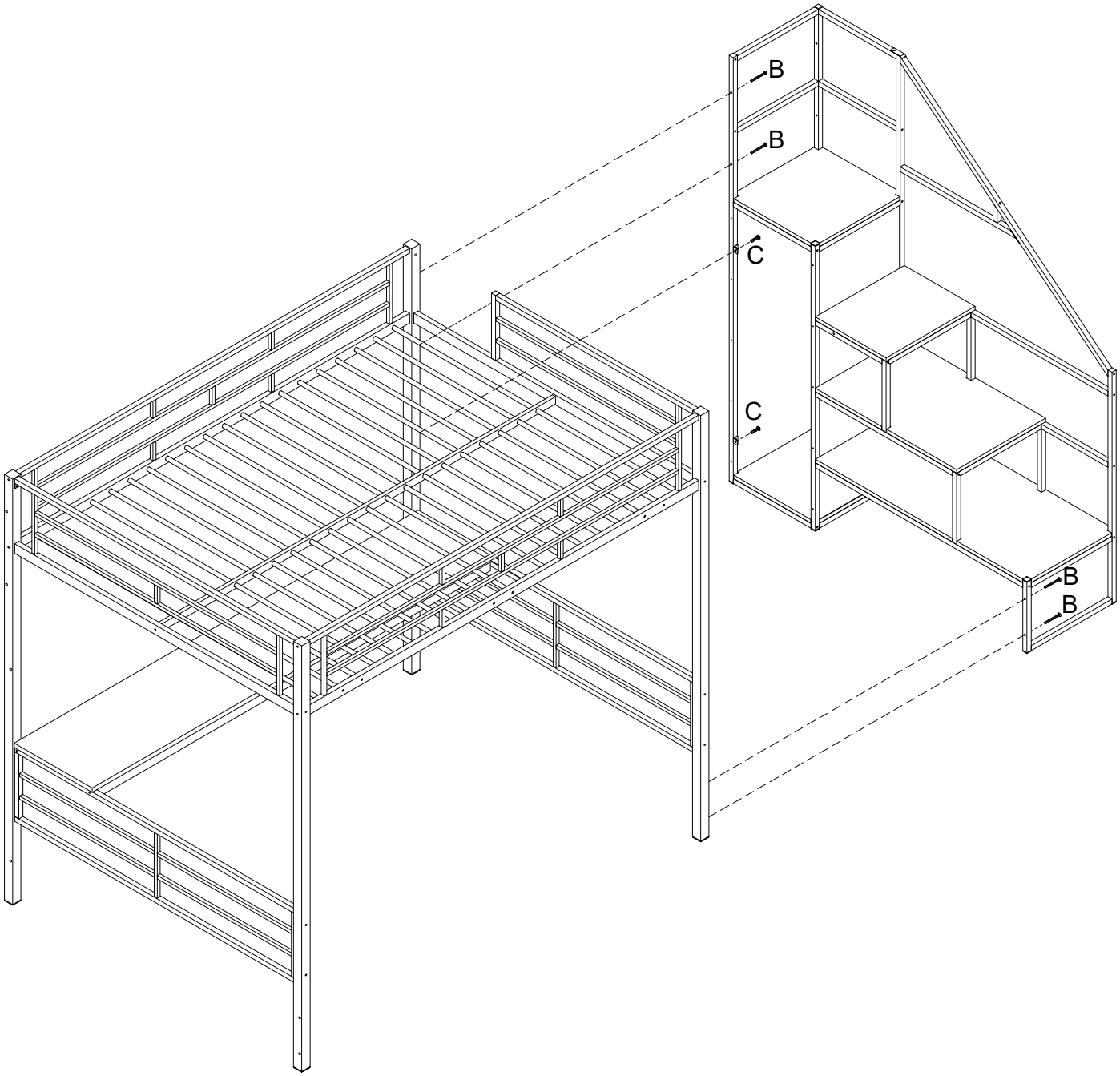

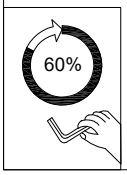

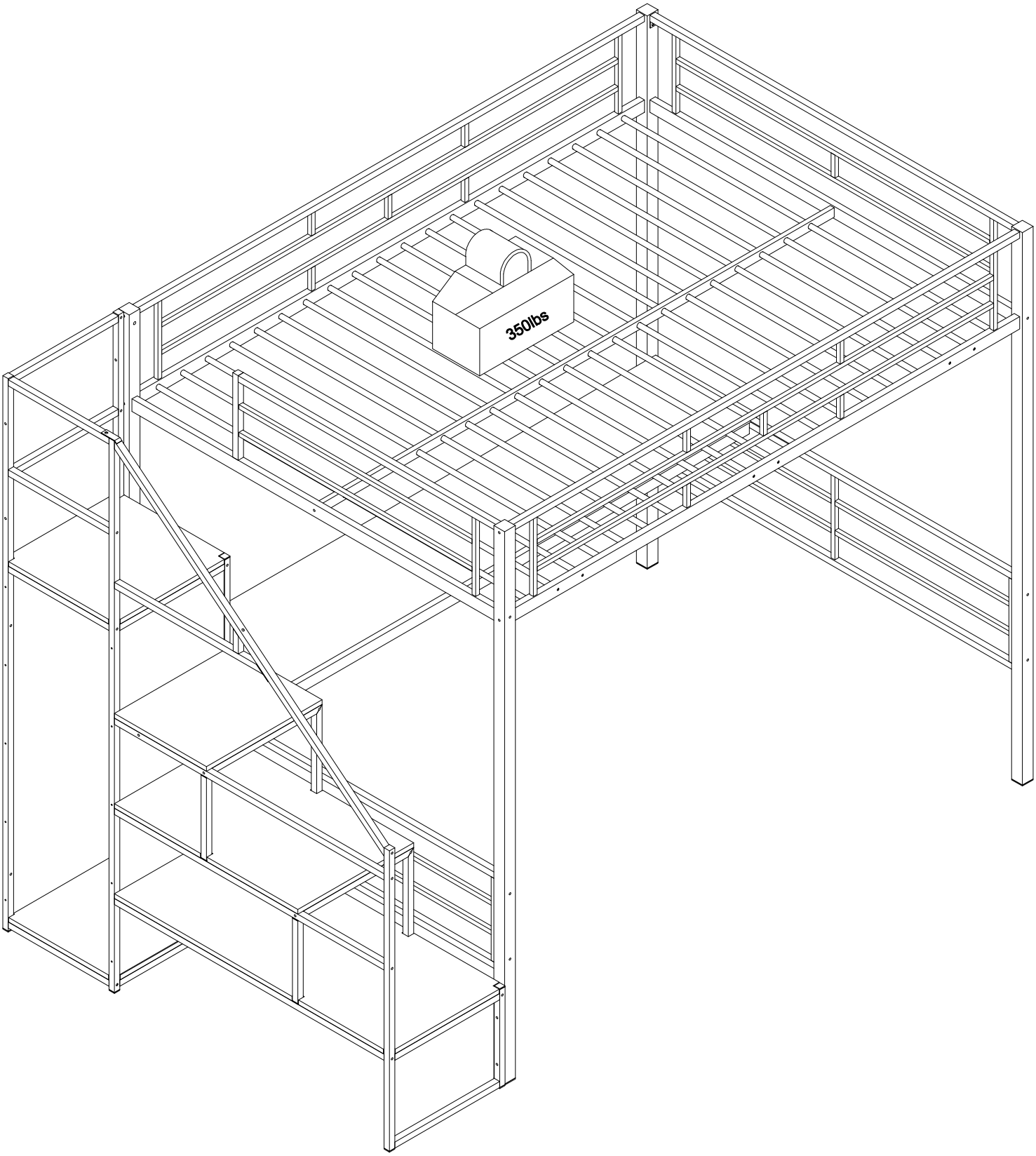
350lbs

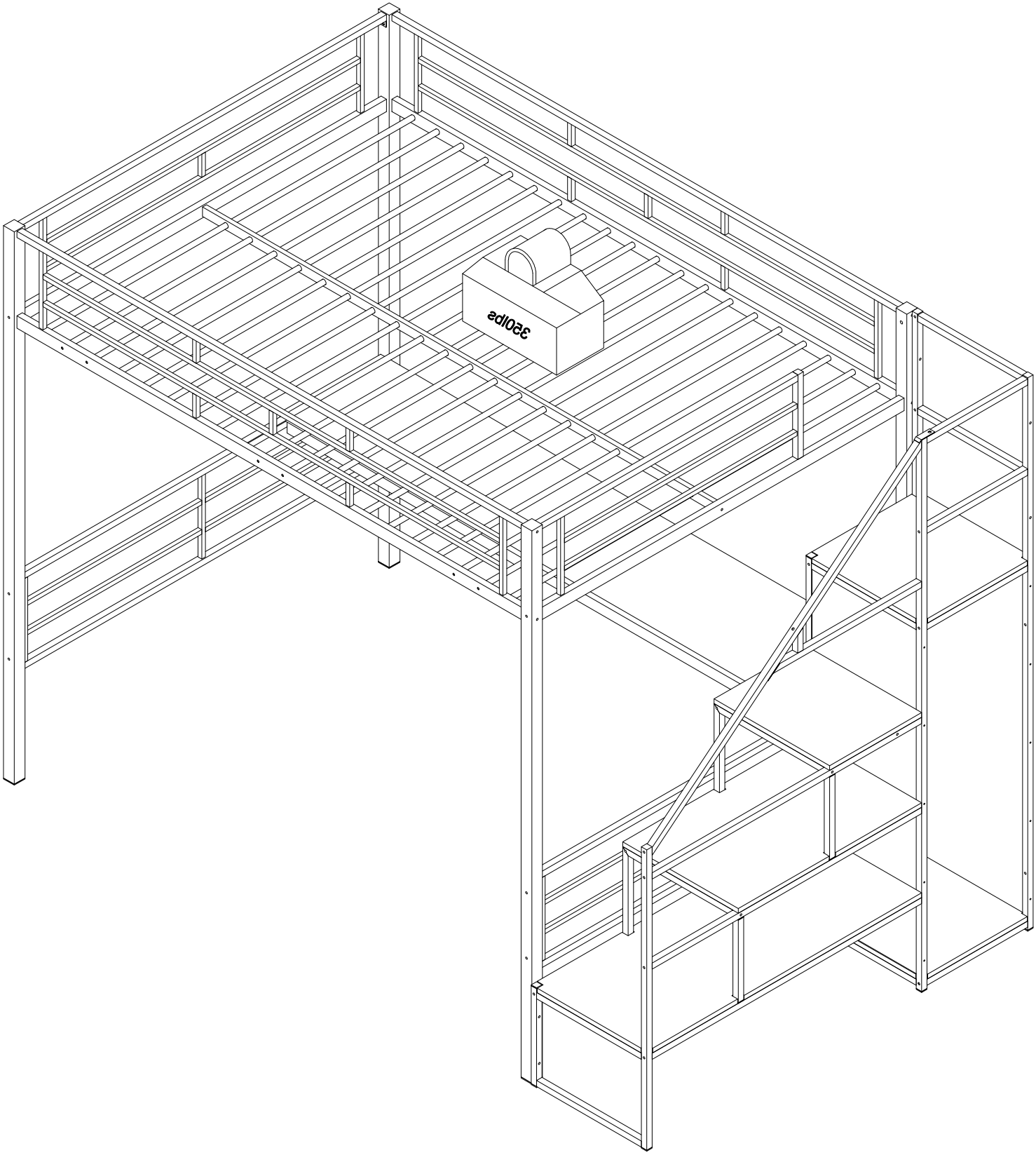
350lbs