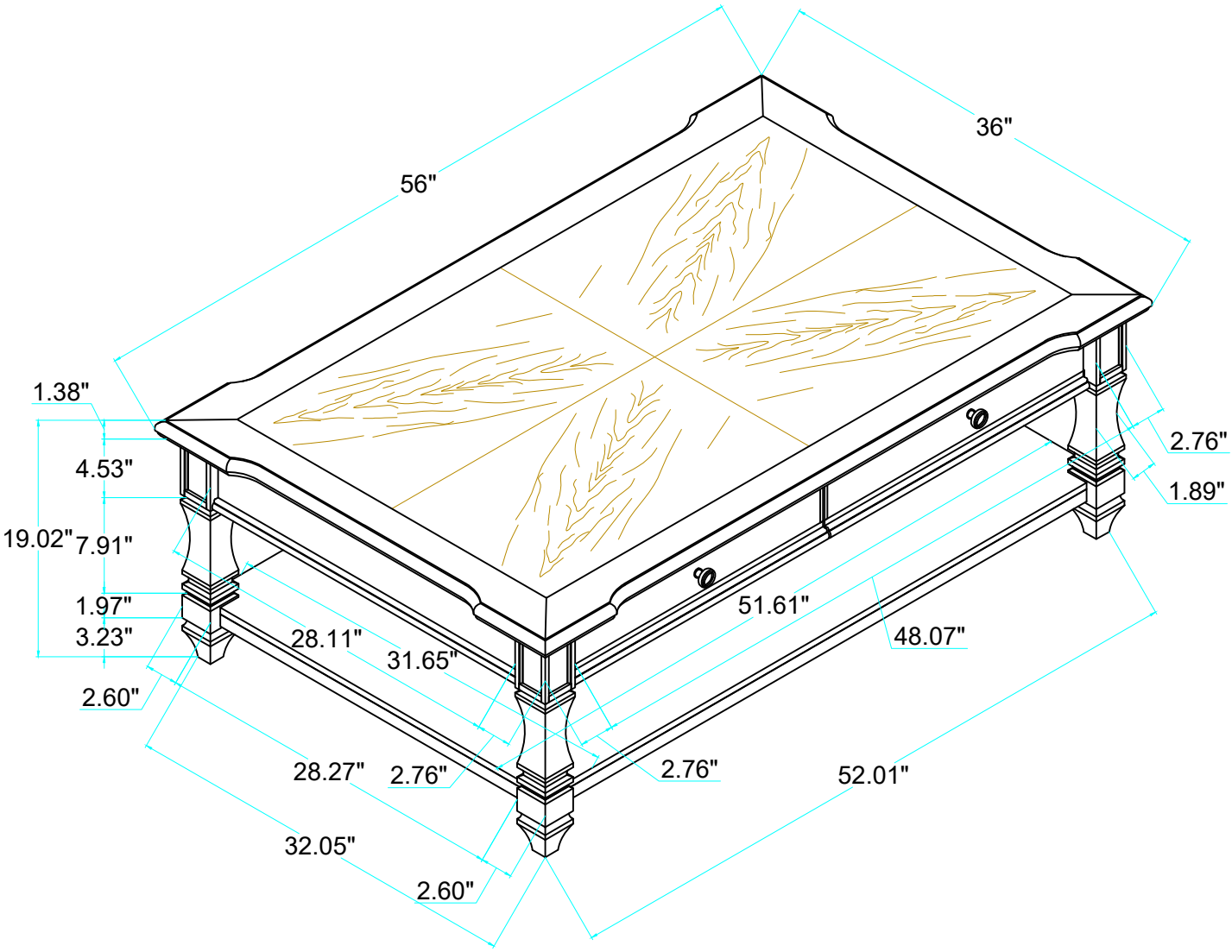
56"
36"
1.38"
4.53"
19.02"
7.91"
1.97"
3.23"
2.60"
28.11"
31.65"
51.61"
48.07"
2.76"
1.89"
28.27"
2.76"
2.76"
52.01"
32.05"
2.60"

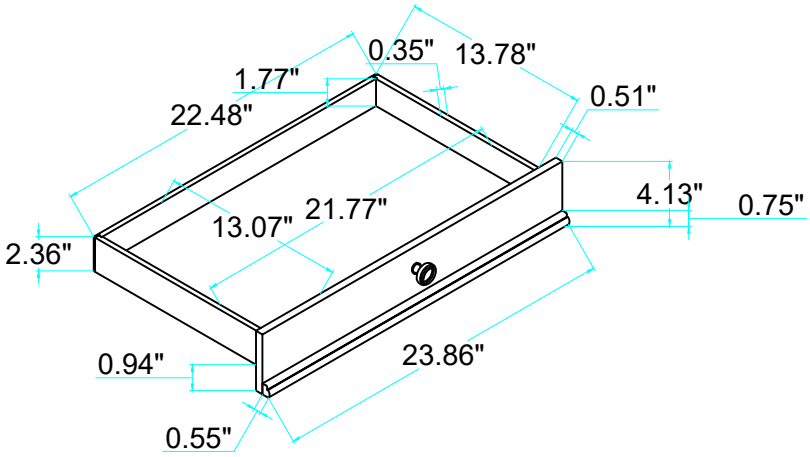
0.35"
13.78"
1.77"
0.51"
22.48"
4.13"
0.75"
21.77"
13.07"
2.36"
0.94"
23.86"
0.55"