INSTALLATION
Product Manual

Version: 740029US-01-26A-PF

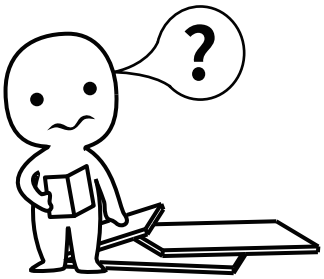

IMPORTANT INFORMATION!

please read the entire manual before starting to assemble and/or using this product.follow the manual thoroughly and keep it for further reference.

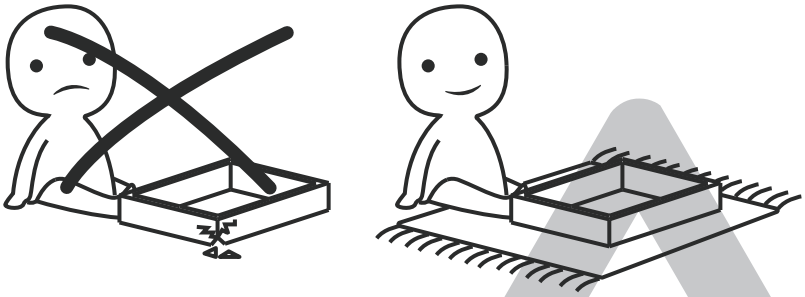

AVOID SCRATCHES!

In order to avoid scratching this furnuture should be assembled on a soft layer-could be a rug.

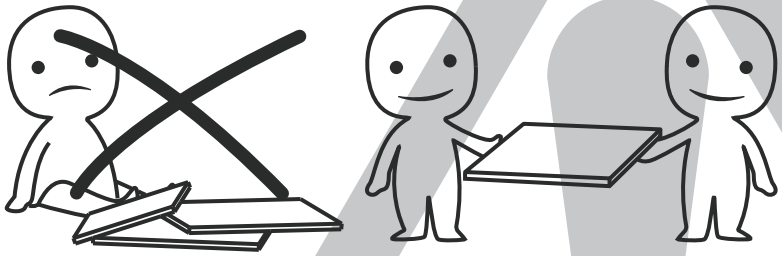

IMPROVE EFFICIENCY !

Try to find a partner to install with you, which can speed up the installation efficiency and shorten the time.

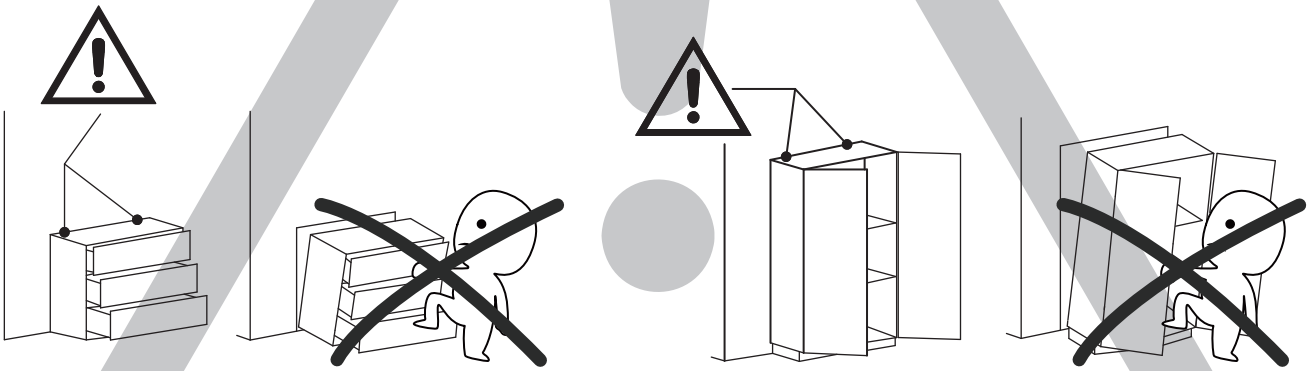

ANTI-TOPPLE WARNING !

Overturned furniture can cause serious or fatal crush injuries. To prevent tipping over, be sure to use the wall attachment, if not included with this product. Please purchase the wall attachment that fit your wall. If unsure, seek professional advice. Please read and follow each step of the instructions carefully.

IMPORTANT !

It is important that any product which is assembled using any kind of screw is re-tightened 2 weeks after assembly,and once every 3 months - in order to assure stability through-out the lifespan of the product.

For regular maintenance and cleaning of the product, for the frame, please use a rag dipped in neutral detergent to fully wipe it, and then dry it with a clean rag.For glass materials, wipe with a rag dampened with water glass cleaner, and then dry with a dry rag.

Do not use an electric screwdriver, and do not use too much force when installing, because the board is easy to break.

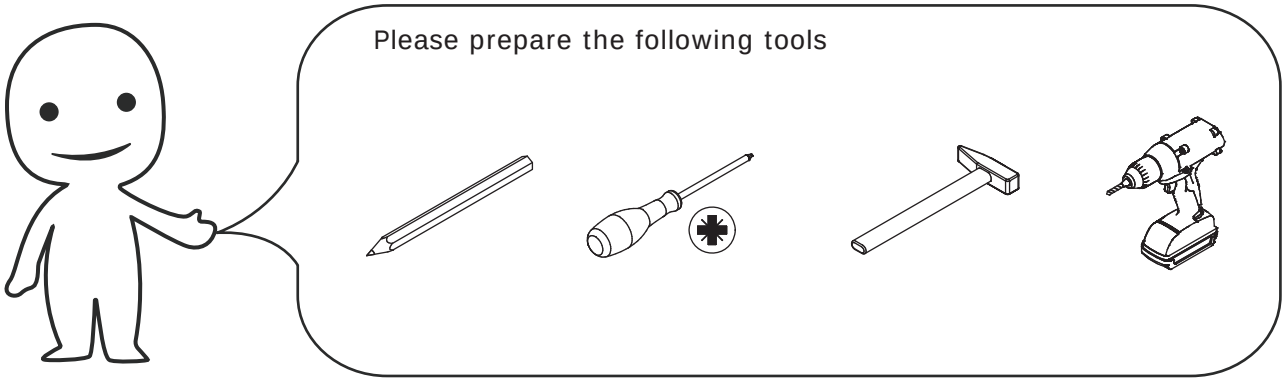

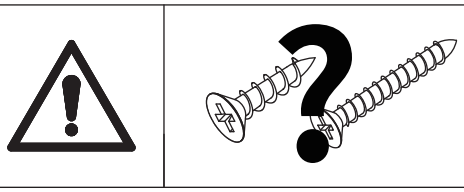

When installing, please carefully confirm whether each screw corresponds to the manual, accessories with similar shapes can be distinguished by size

A x 76	B x 76	C x 35	D x 4
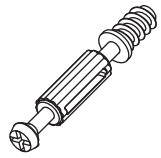 M5 x 42 mm	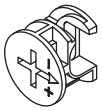 ∅15 x 12 mm	 ∅8 x 30 mm	 M7 x 50 mm
E x 84	**F x 12**	**G x 4**	**H x 4**
 M3.5 x 14 mm	 M5 x 40 mm	 M4 x 20 mm	 M6 x 40 mm
J x 4	**K x 4**	**L x 2**	**M x 34**
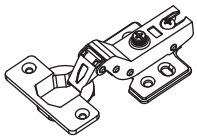 15mm-DW	 6018	 ∅8 x 60 mm M5 x 55 mm	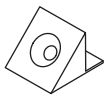
N x 2	**O x 20**	**x 1**	
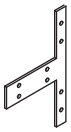	 ∅21 mm	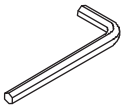 #4	

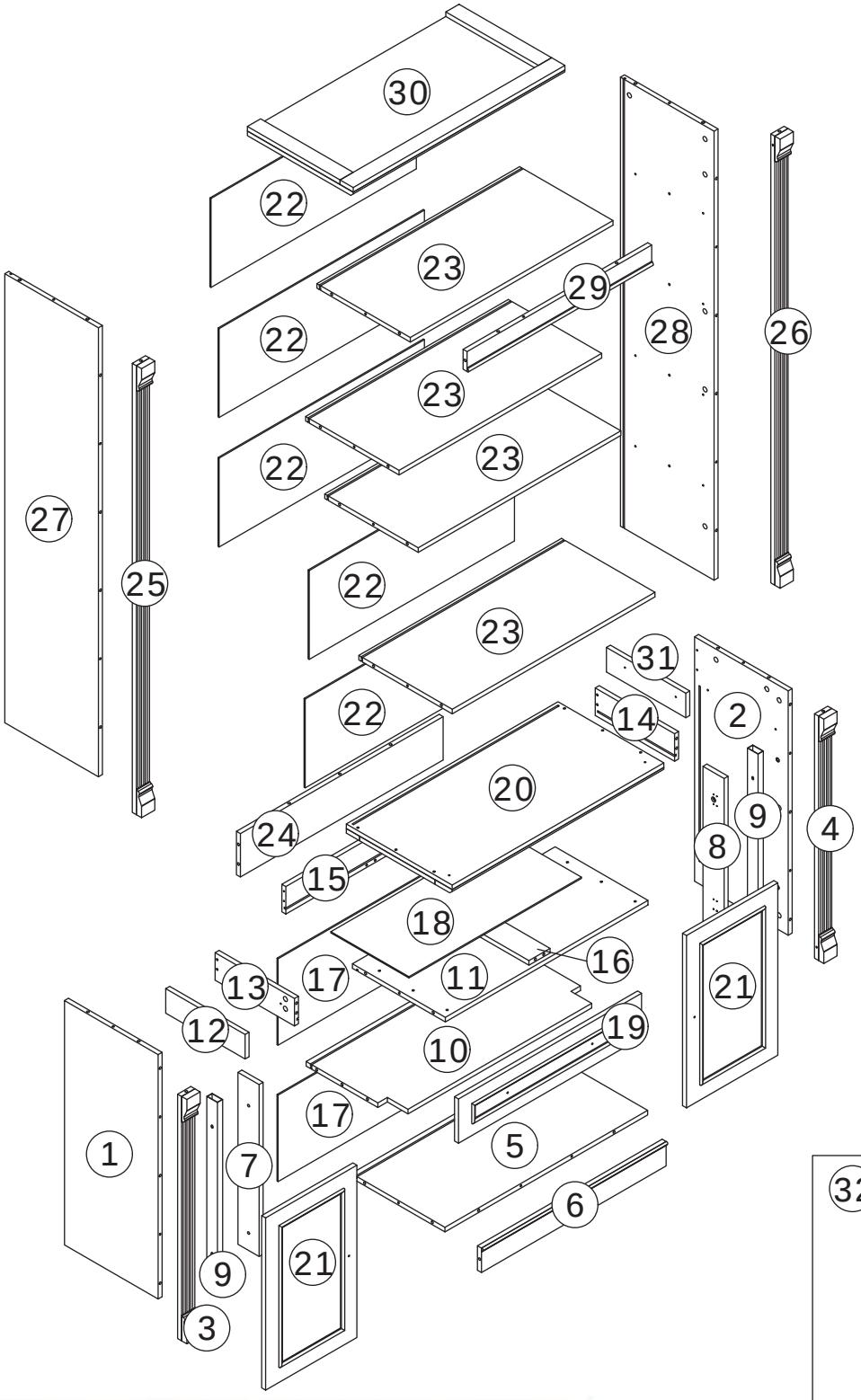

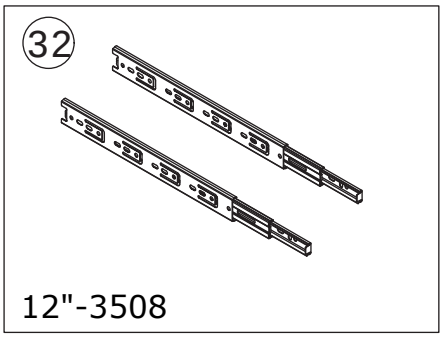

⚠WARNING





Children have died from furniture tipover.To reduce the risk of furniture tipover:

- ALWAYS install Anti-tip device provided.
- NEVER put a TV on this product.
- NEVER allow children to stand,climb or hang on drawers,doors,or shelves.
- NEVER open more than one drawer at a time.
- Place heaviest items in the lowest drawers.

This is a permanent label.
Do not remove!

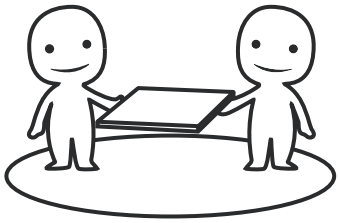

ASSEMBLED BY 2 ADULTS

SIIdes Must Be Separated Before Assembly.
After Separated, Set Aside Until Needed for Assembly.

Las diapositivas deben separarse antes del montaje.
Después de la separación, déjelo a un lado hasta que sea necesario.

Les glissières doivent être séparées avant l'assemblage.
Après la séparation, mettez de côté jusqu'au moment de l'assemblage.

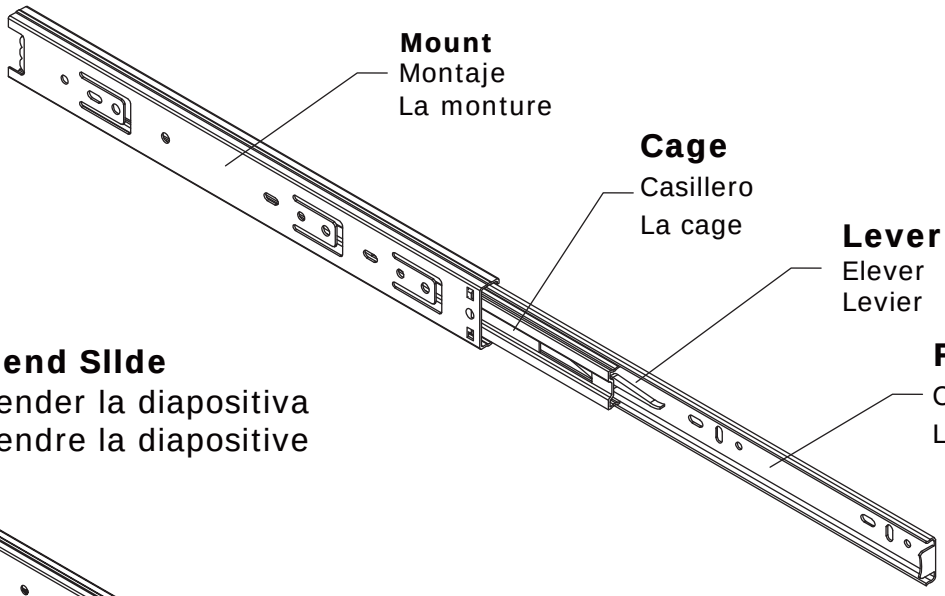

STEP 1: Extend SIIde
Extender la diapositiva
Extendre la diapositive

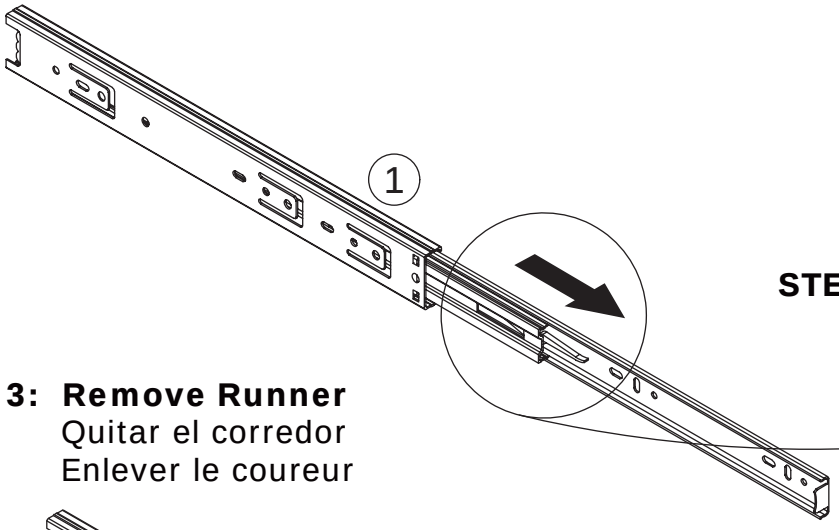

STEP 2: Push Lever UP
Empujar hacia arriba
Lever le levier

STEP 3: Remove Runner
Quitar el corredor
Enlever le coureur

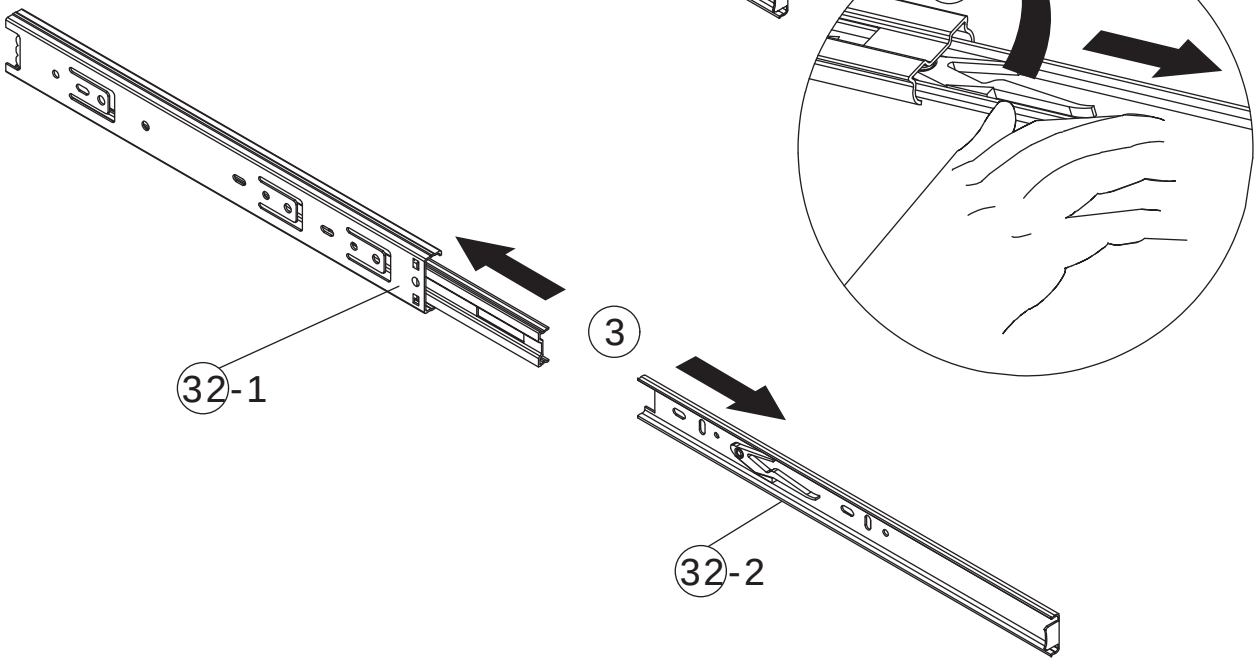

1

A x 6



M5 x 42 mm

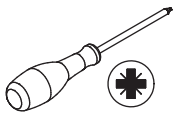

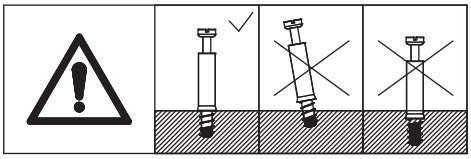

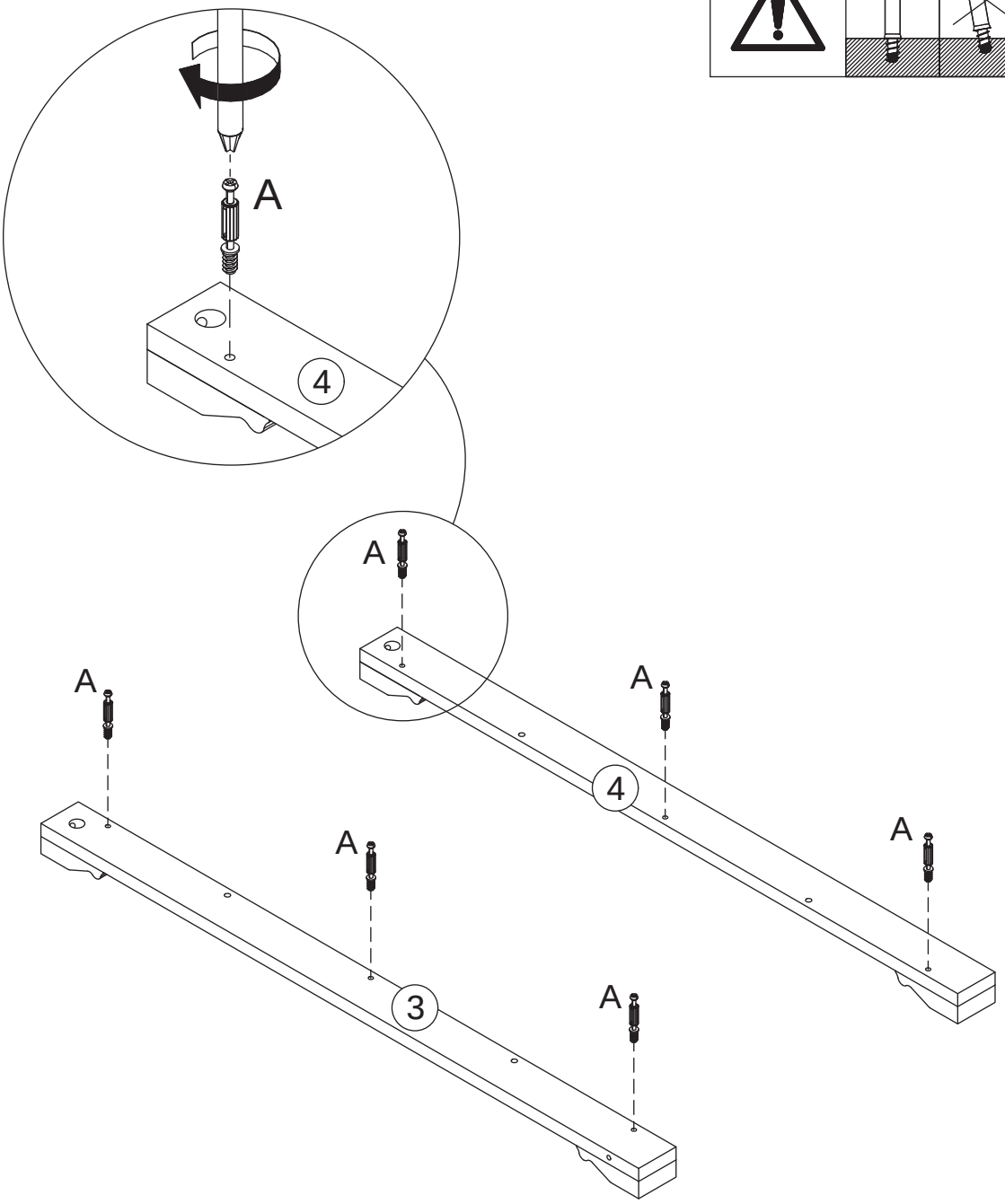

Fasten cam screws (A) to Panels 3 and 4.

2

B x 6	C x 4	
		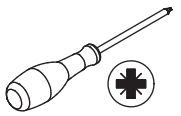
∅15 x 12 mm	∅8 x 30 mm	

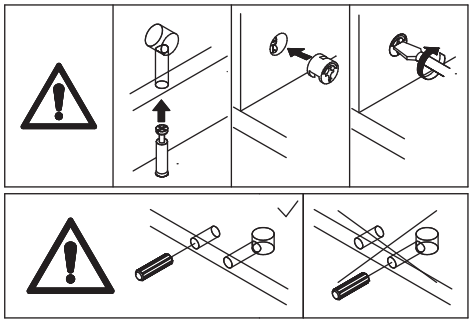

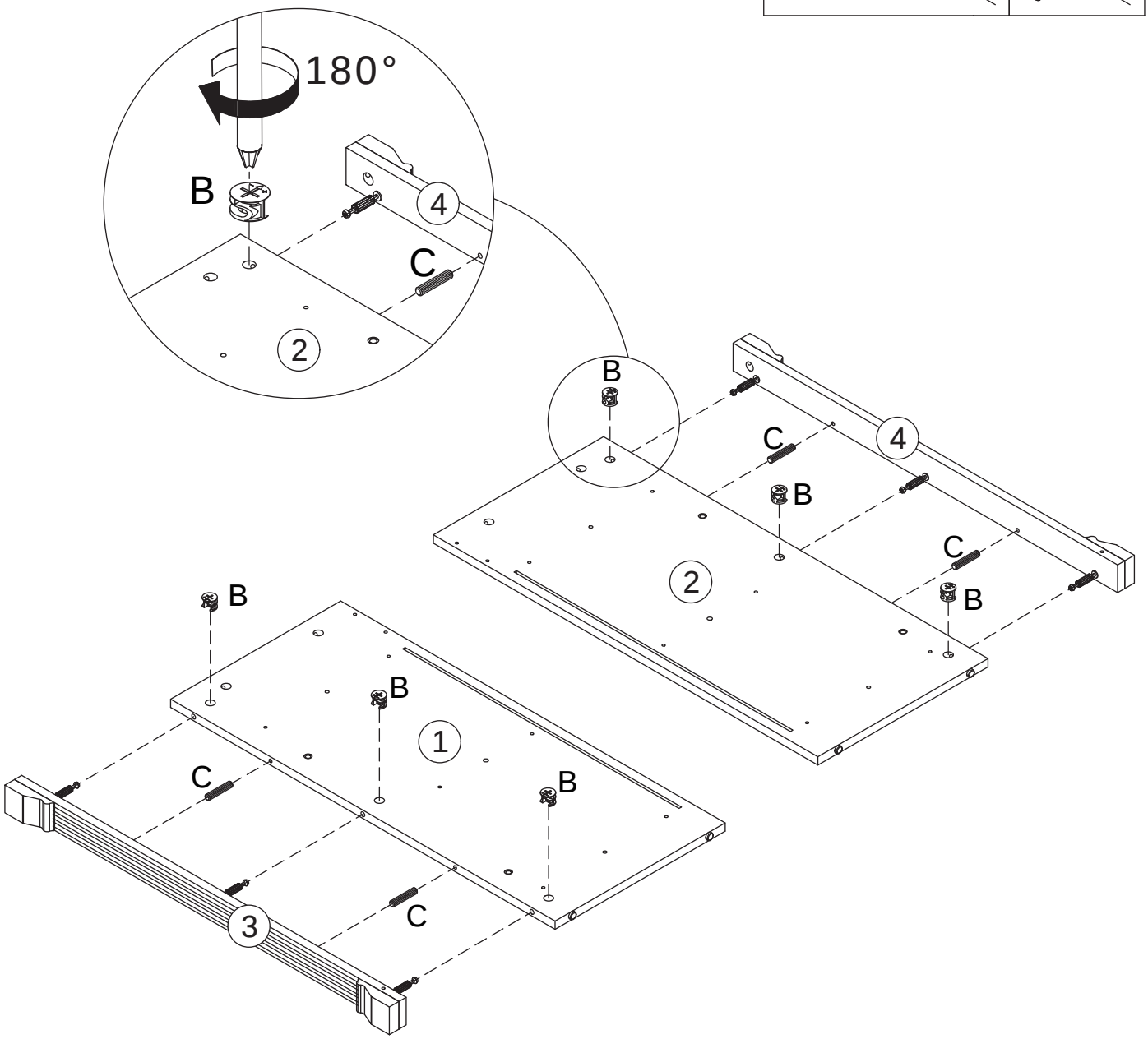

Connect Panels 1 and 2 to Panels 3 and 4 respectively with dowel pins (C), fit cam lock (B) into position, then turn it clockwise to tighten.

3

A x 2



M5 x 42 mm

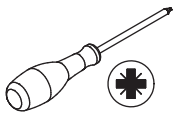

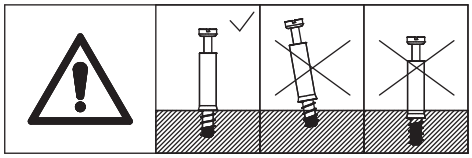

Fasten cam screws (A) to Panel 6.

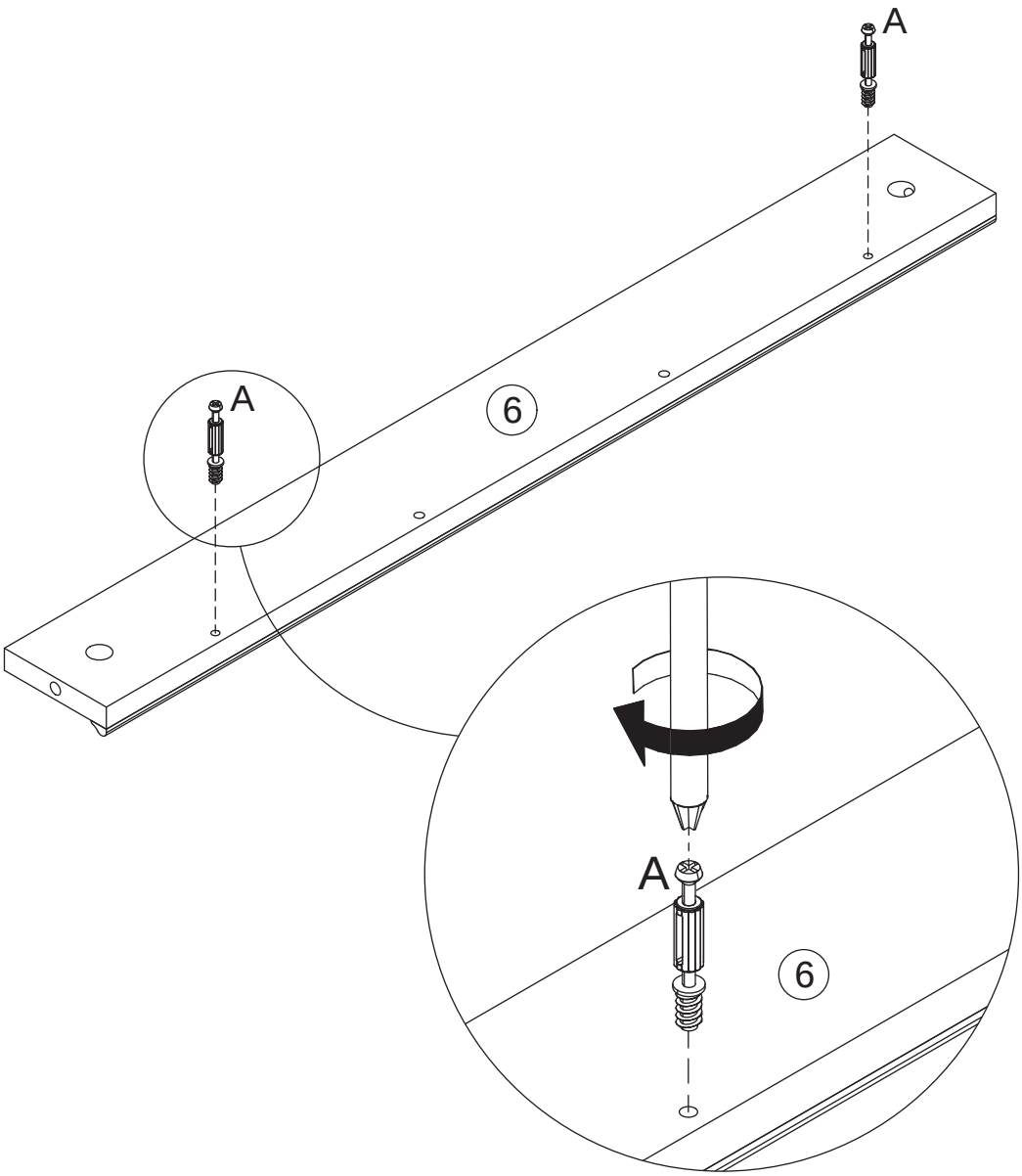

4

B x 2	C x 2	
		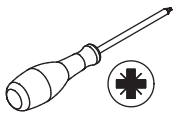
∅15 x 12 mm	∅8 x 30 mm	

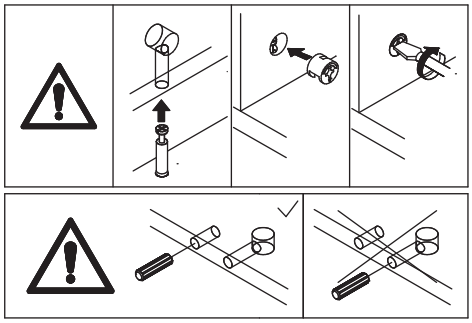

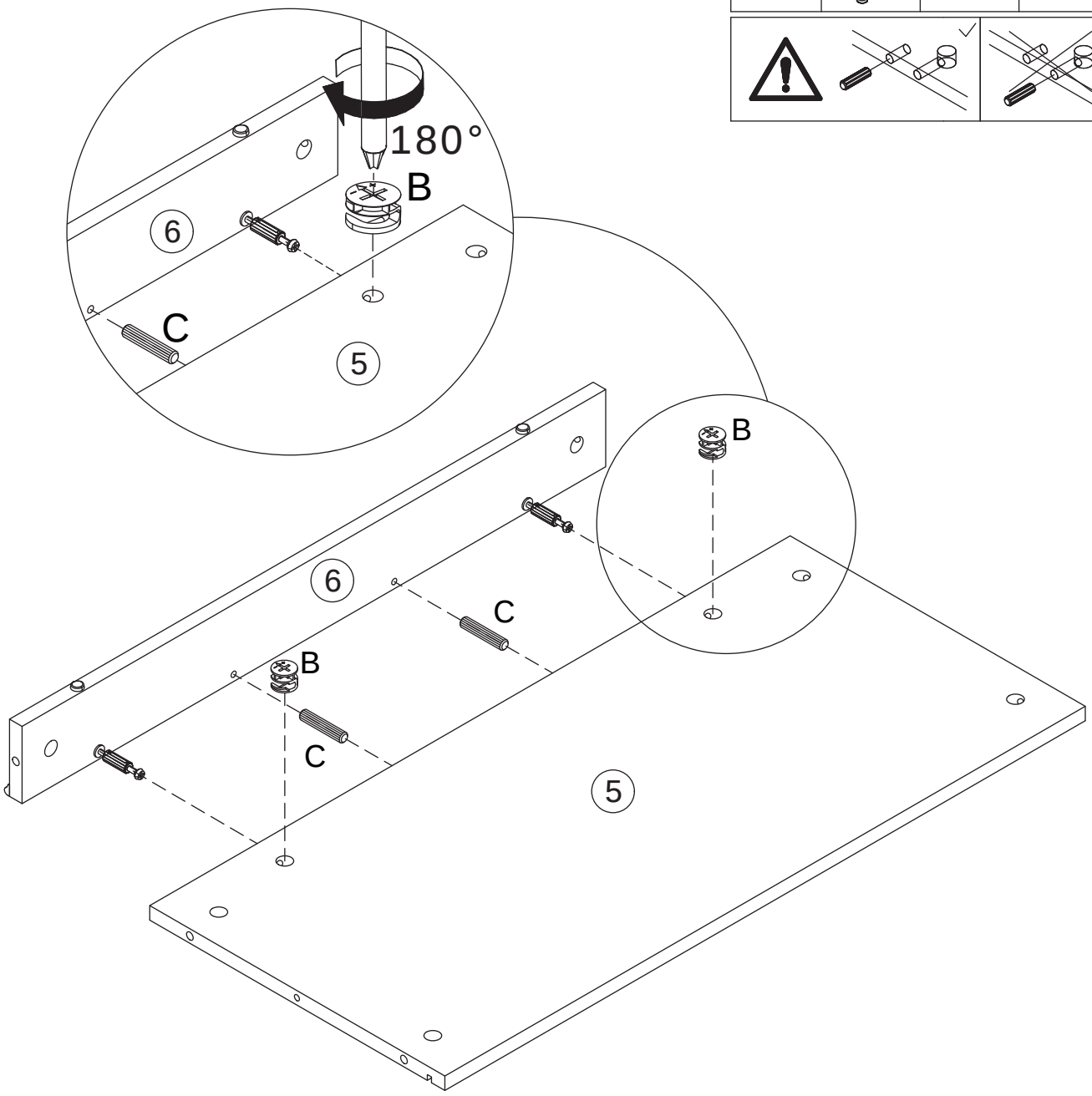

Connect Panel 5 to Panel 6 with dowel pins (C), fit cam lock (B) into position, then turn it clockwise to tighten.

5

H x 4	x 1	
	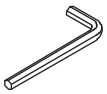	
M6 x 40 mm	#4	

Secure Panel 7 and Part 9 to Panel 1 with screws (H).
Secure Panel 8 and Part 9 to Panel 2 with screws (H).

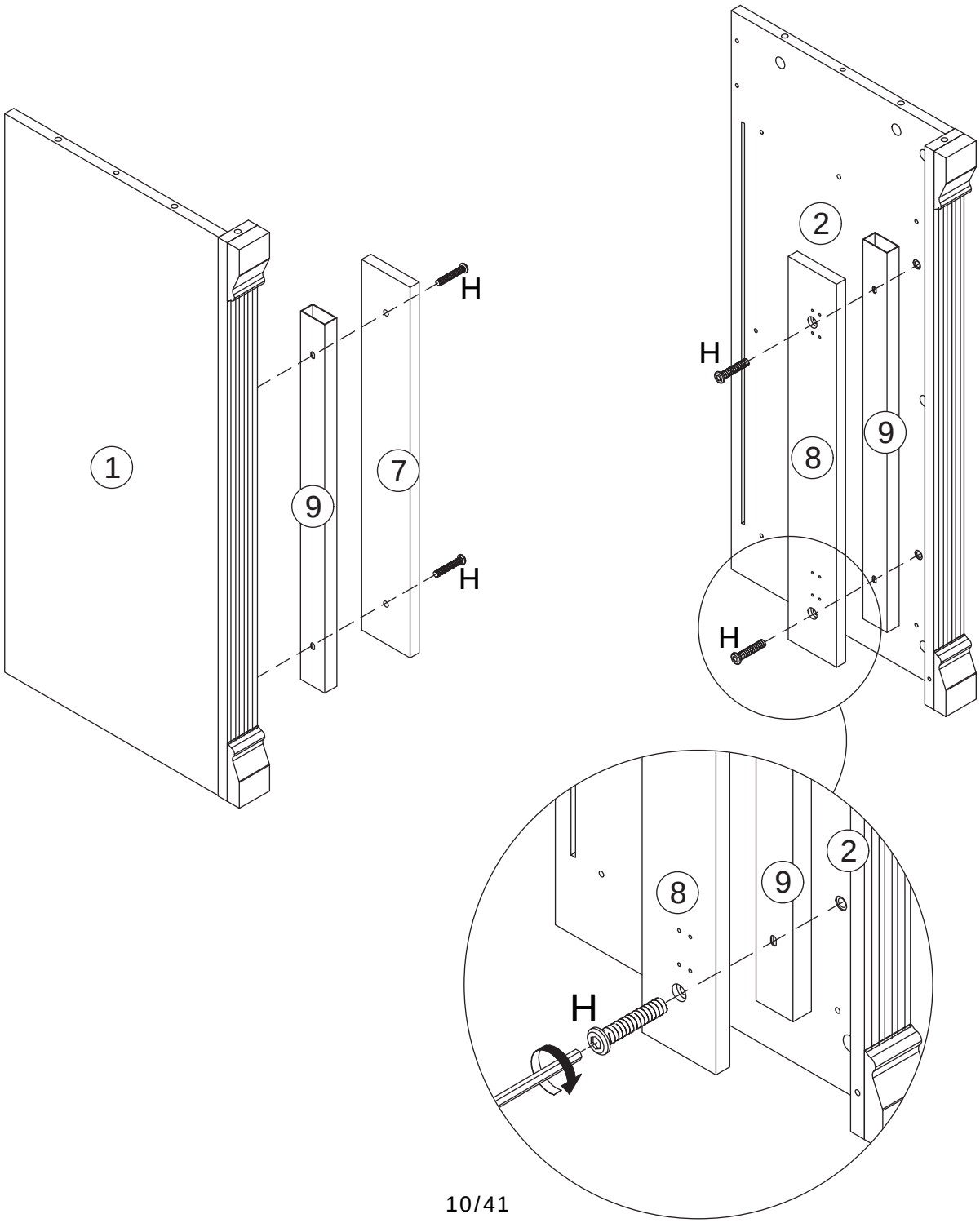

6

A x 18



M5 x 42 mm

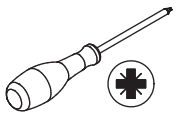

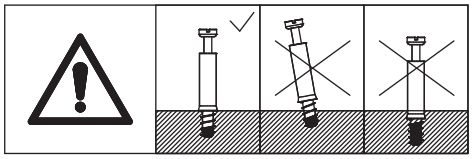

Fasten cam screws (A) to Panels 1 and 2.

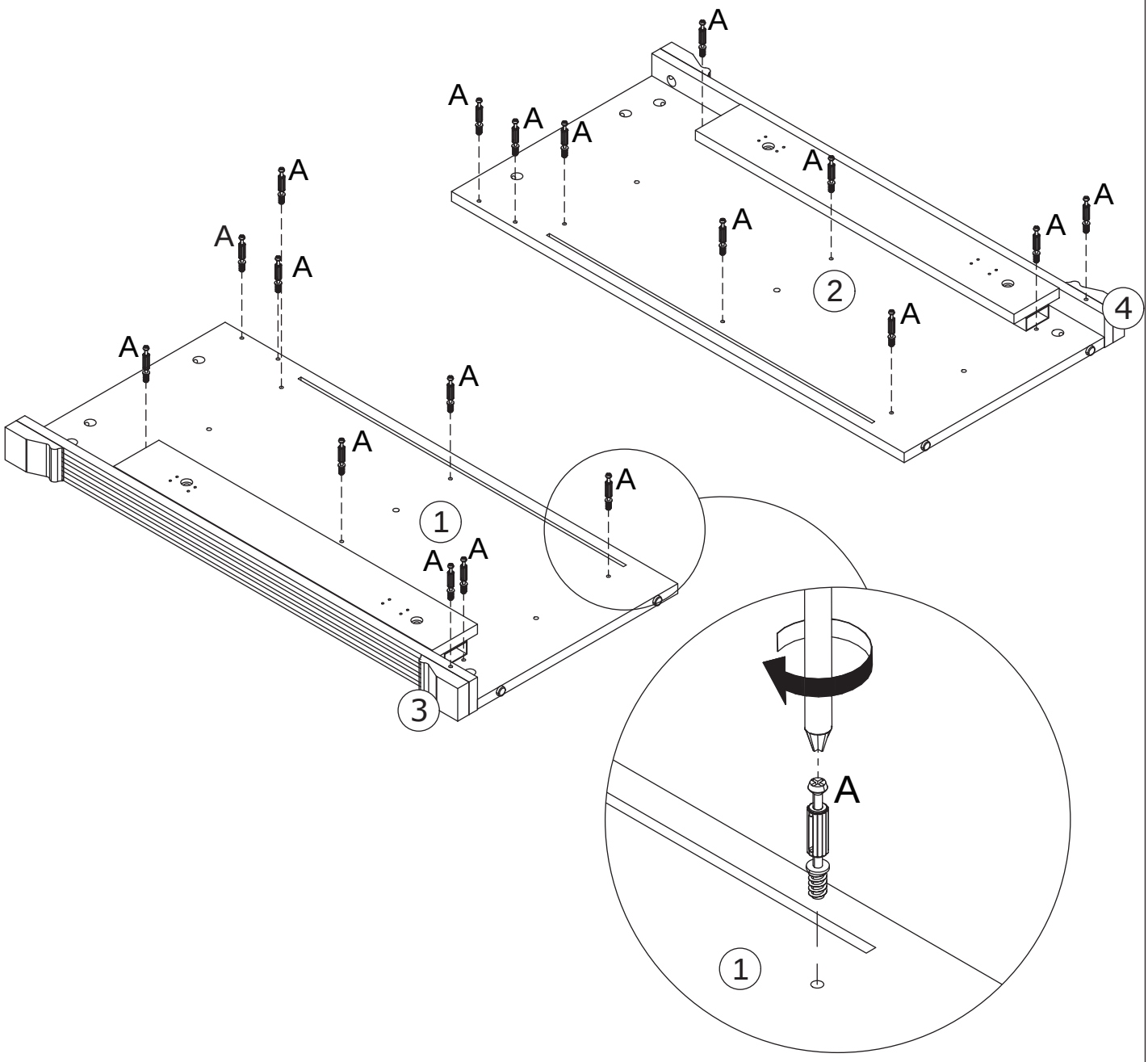

7

E x 4



∅3.5 x 14 mm

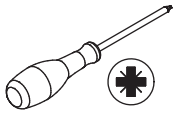

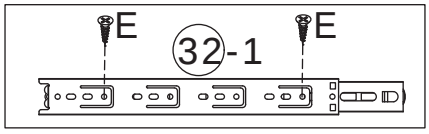

Secure drawer slides (32-1) to Panels 31 and 12 with screws (E). **Note the hole orientation of Panels 12 and 31.**

8

C x 2	F x 6	
		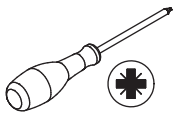
∅8 x 30 mm	M5 x 40 mm	

Connect Panel 11 to Panels 12, 24 and 31 with dowel pins (C), and secure with screws (F).

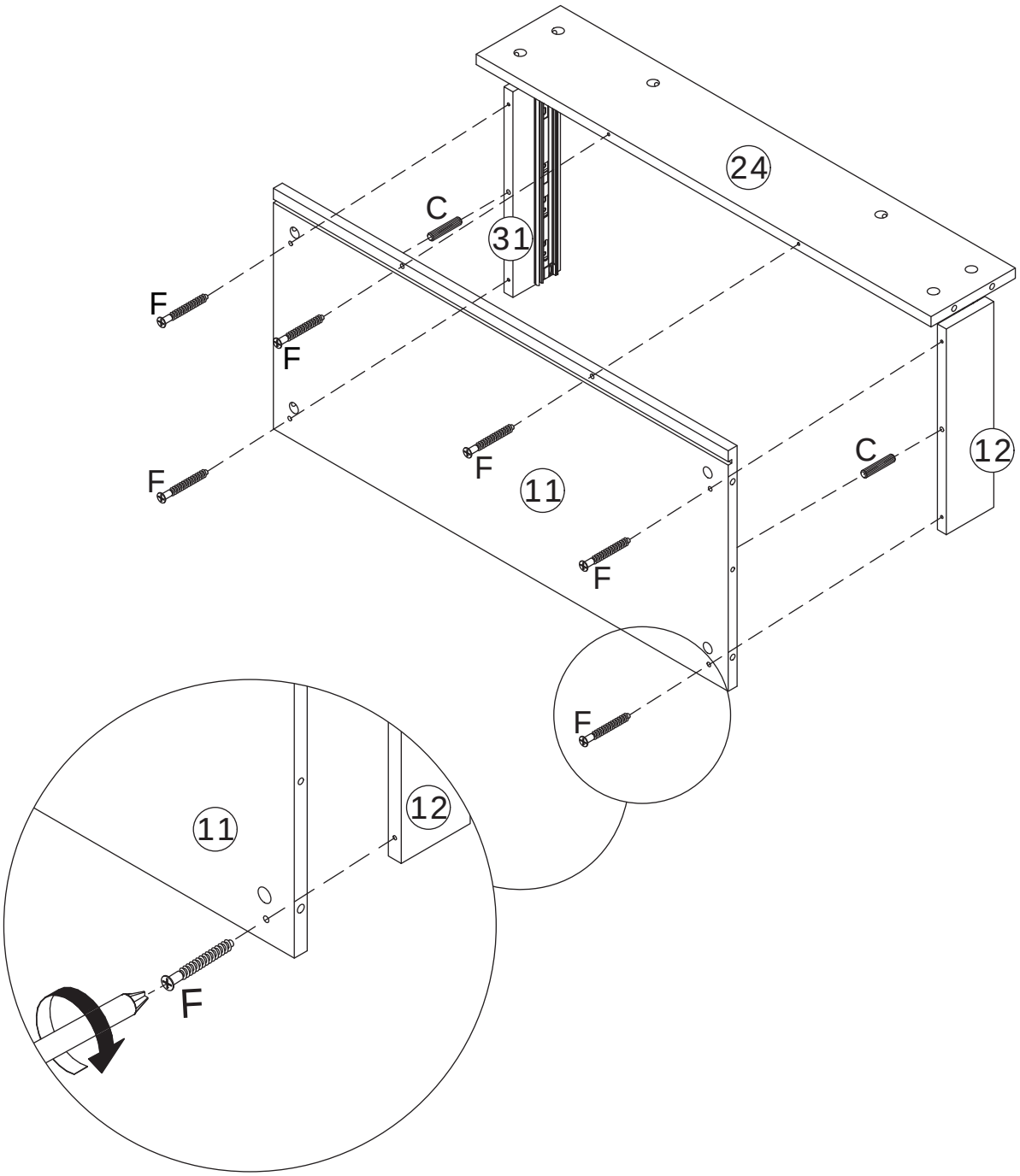

9

B x 4	C x 1	
		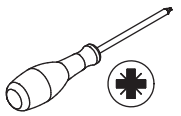
∅15 x 12 mm	∅8 x 30 mm	

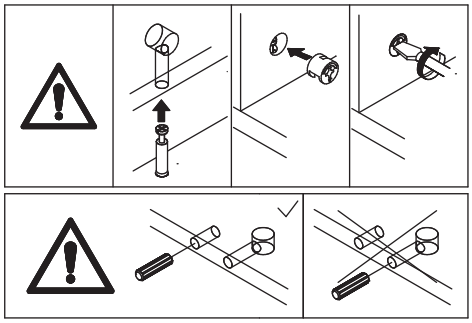

Connect Panels 11 and 24 to Panel 2 with dowel pins (C), fit cam lock (B) into position, then turn it clockwise to tighten.

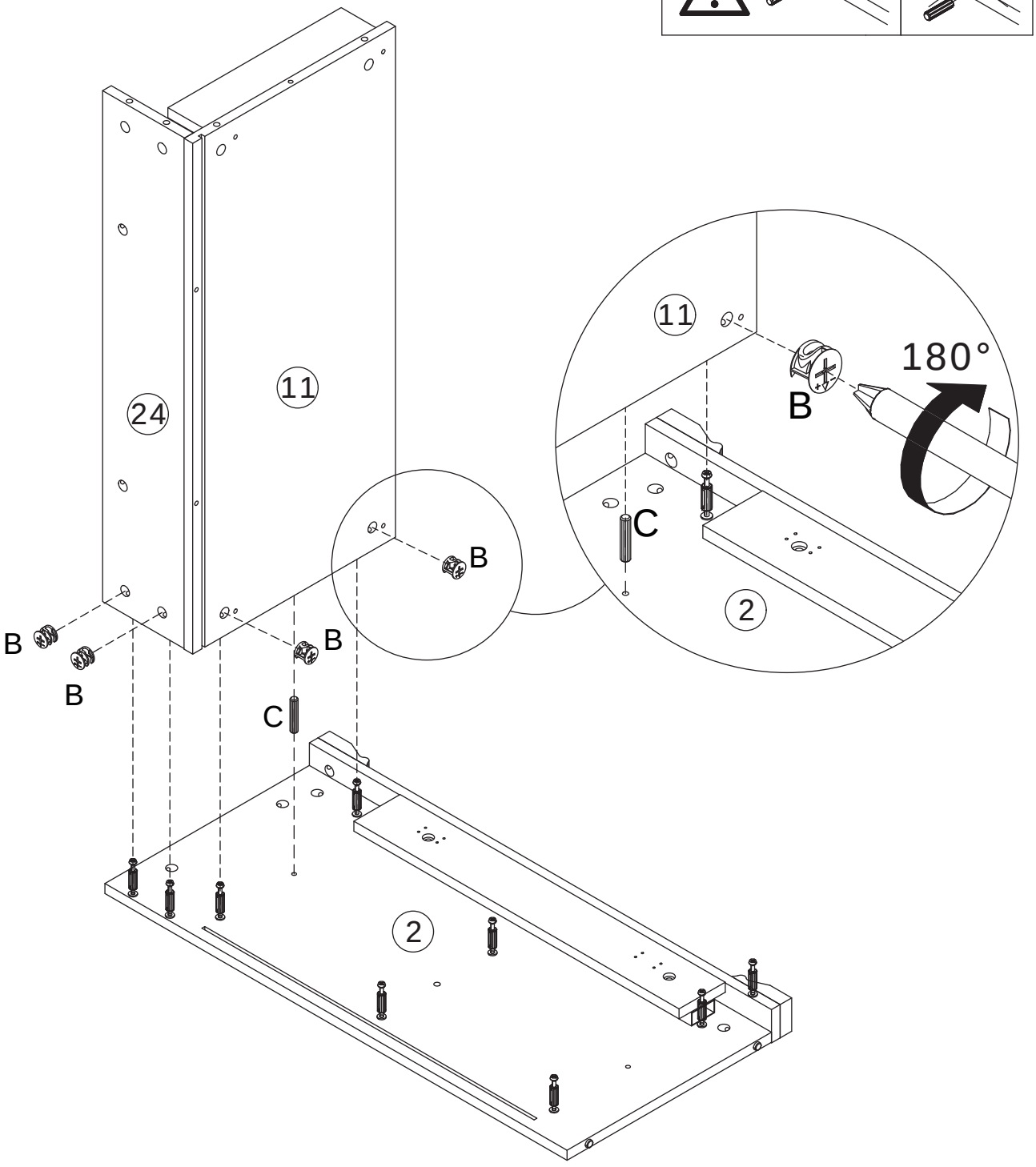

10

B x 2	C x 1	
		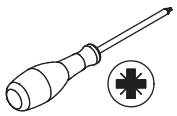
∅15 x 12 mm	∅8 x 30 mm	

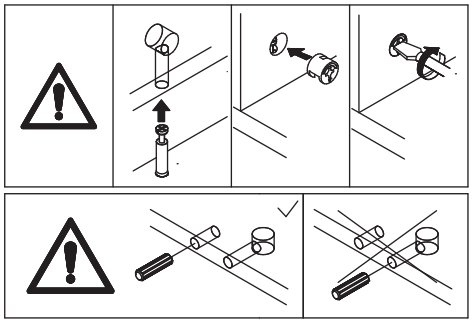

Connect Panel 10 to Panel 2 with dowel pins (C), fit cam lock (B) into position, then turn it clockwise to tighten.

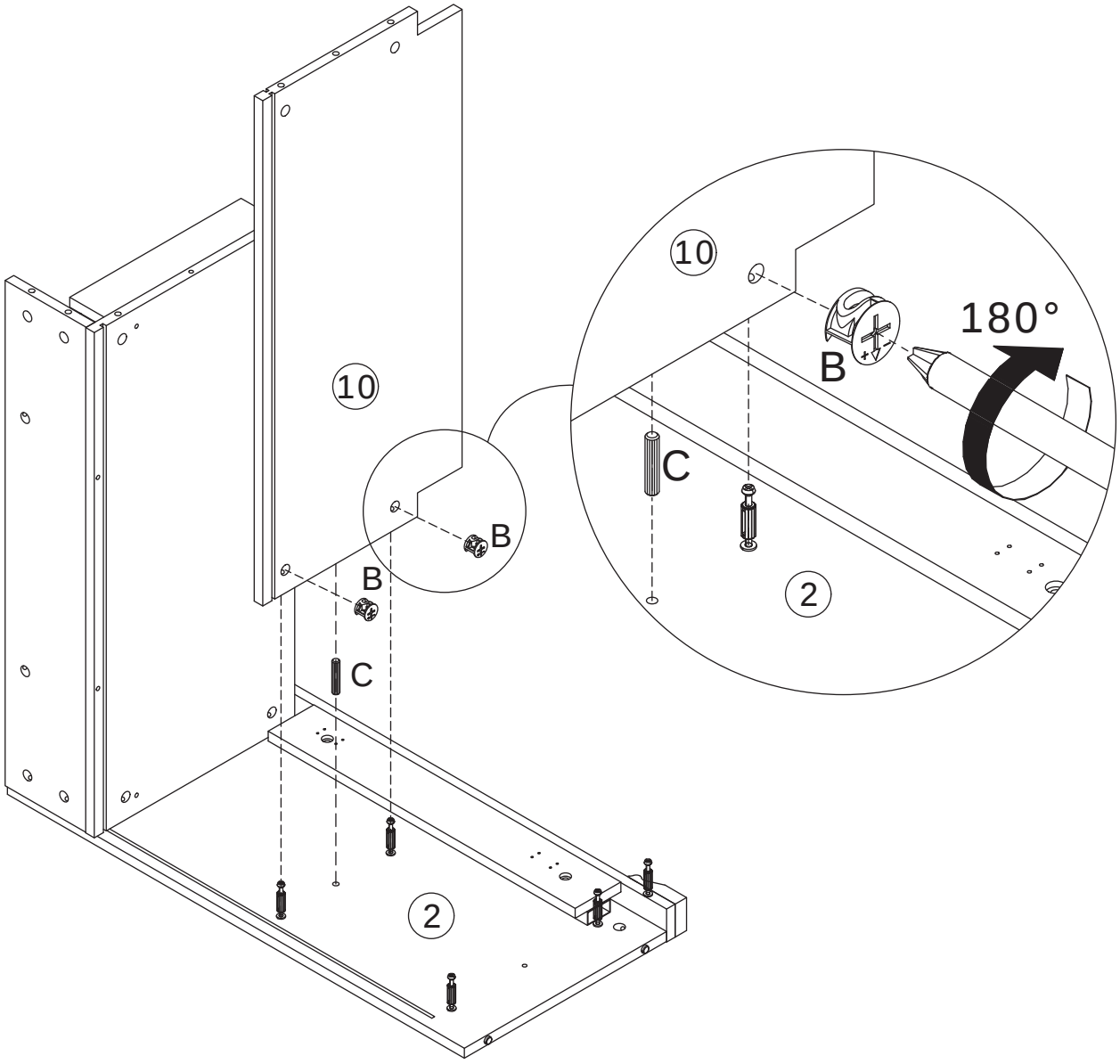

11

B x 3	C x 1	
		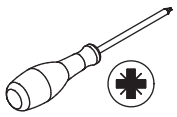
∅15 x 12 mm	∅8 x 30 mm	

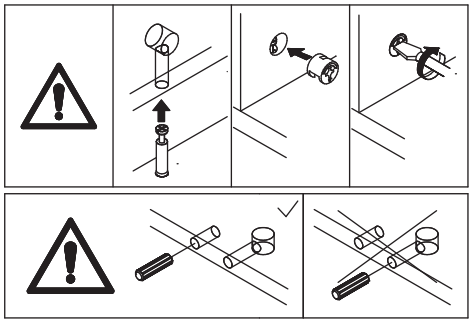

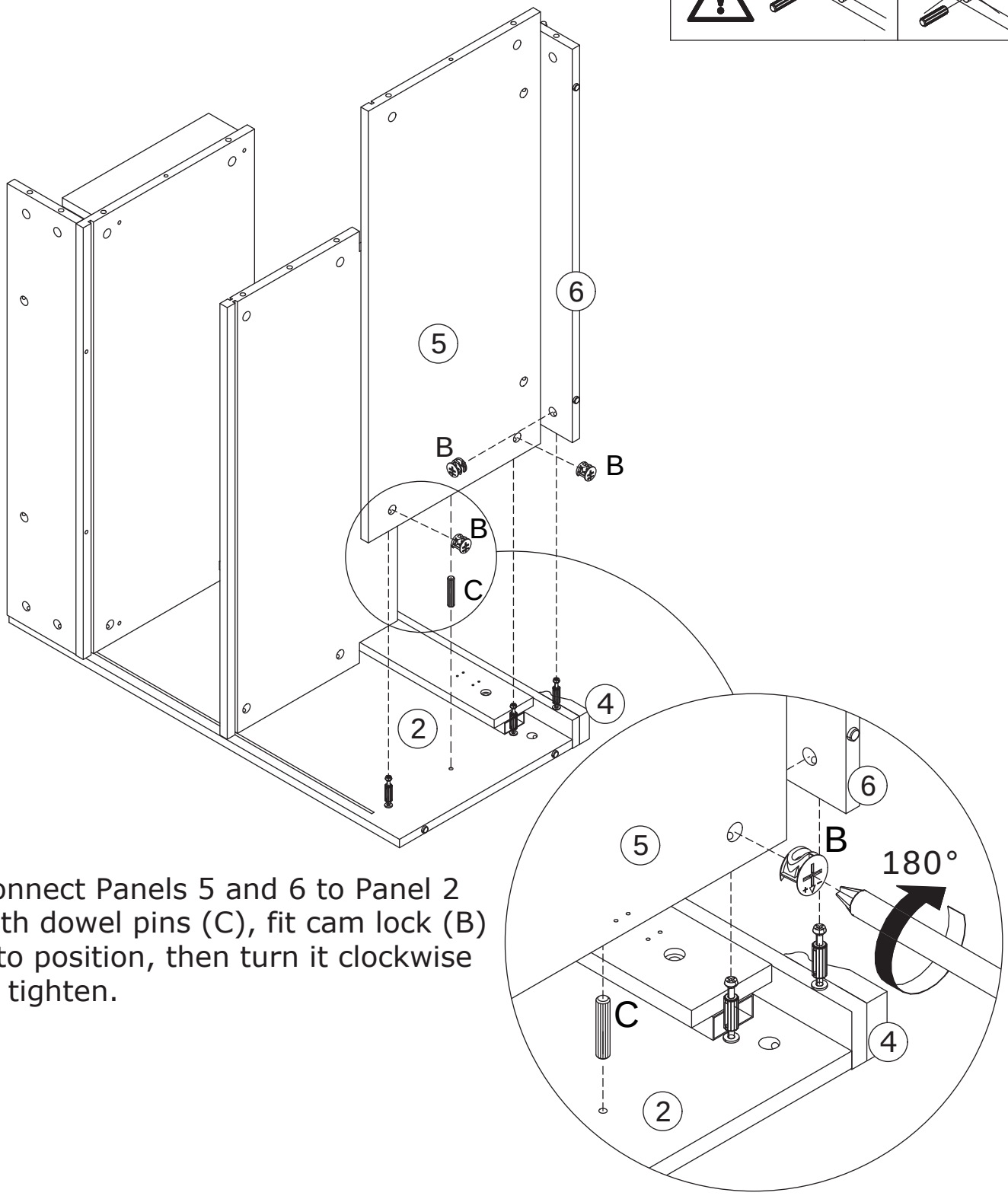

Connect Panels 5 and 6 to Panel 2 with dowel pins (C), fit cam lock (B) into position, then turn it clockwise to tighten.

12

Insert Panel 17 along the reserved slots.

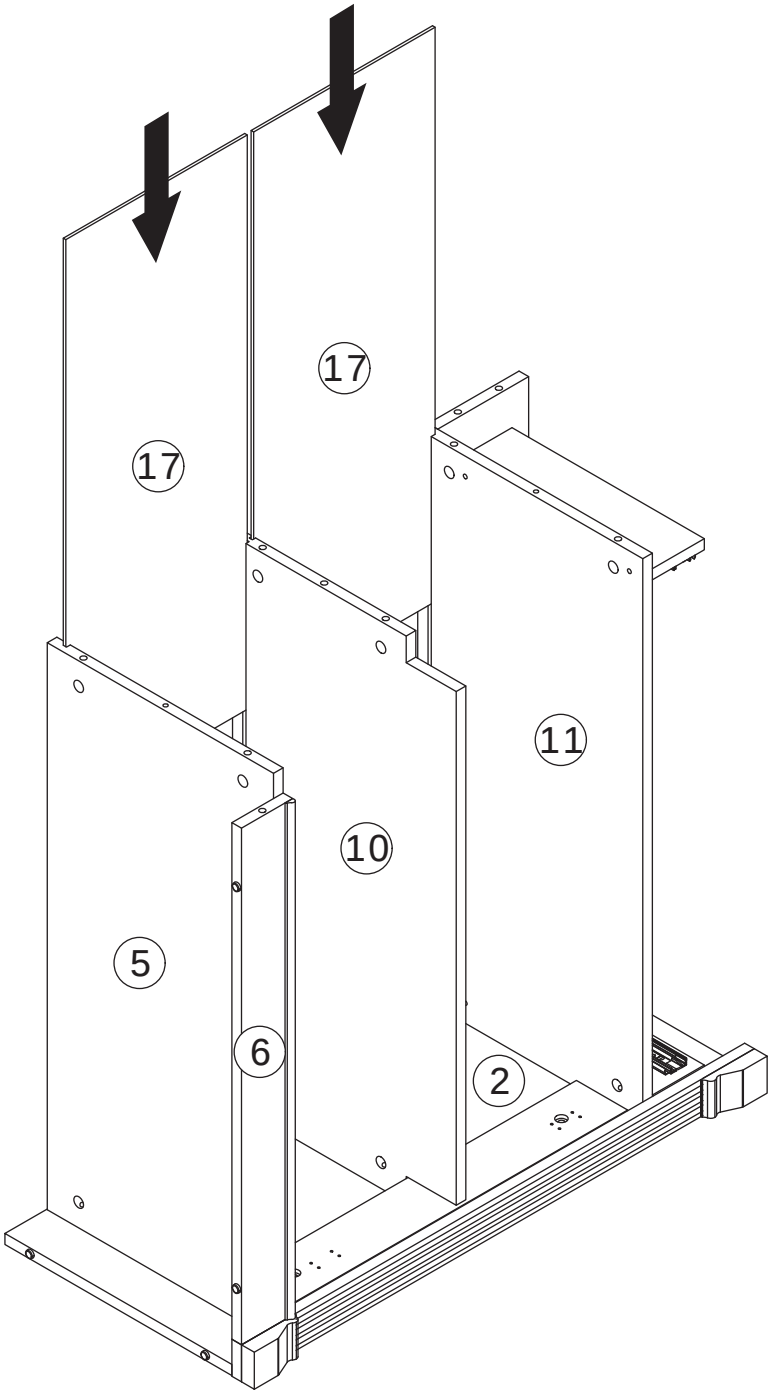

13

B x 9	C x 3	
		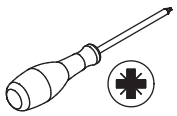
∅15 x 12 mm	∅8 x 30 mm	

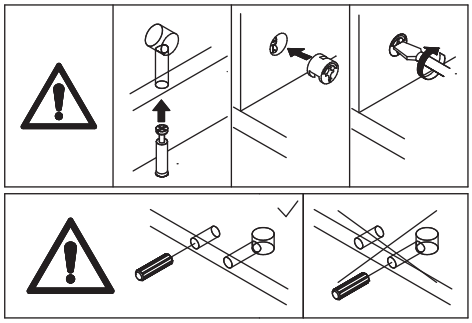

Connect Panel 1 to Panels 5, 10 and 11 with dowel pins (C), fit cam lock (B) into position, then turn it clockwise to tighten.

14

A x 16



M5 x 42 mm

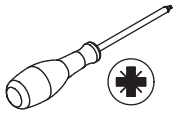

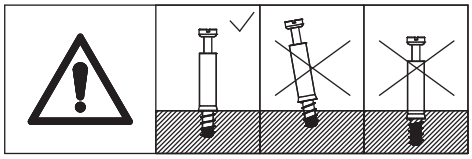

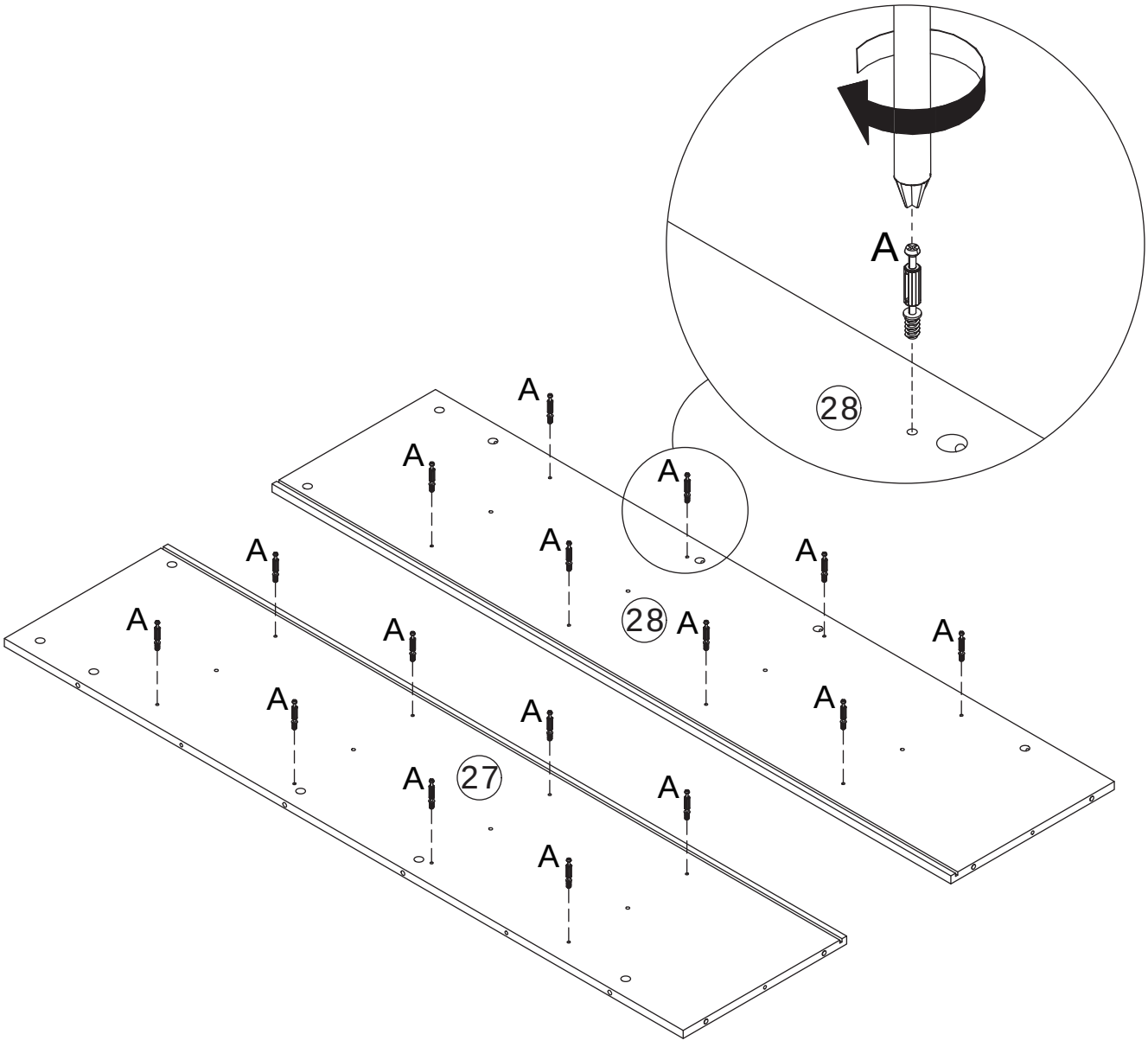
A
28
A
A
A

15

B x 4	C x 2	
		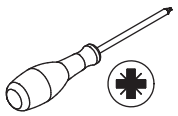
∅15 x 12 mm	∅8 x 30 mm	

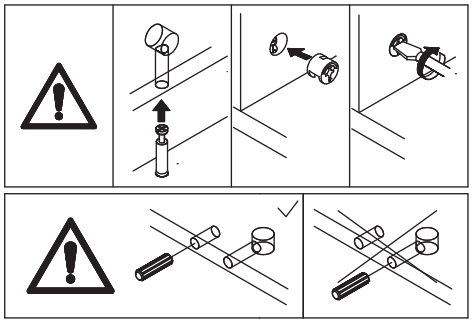

Connect Panel 23 to Panel 28 with dowel pins (C), fit cam lock (B) into position, then turn it clockwise to tighten.

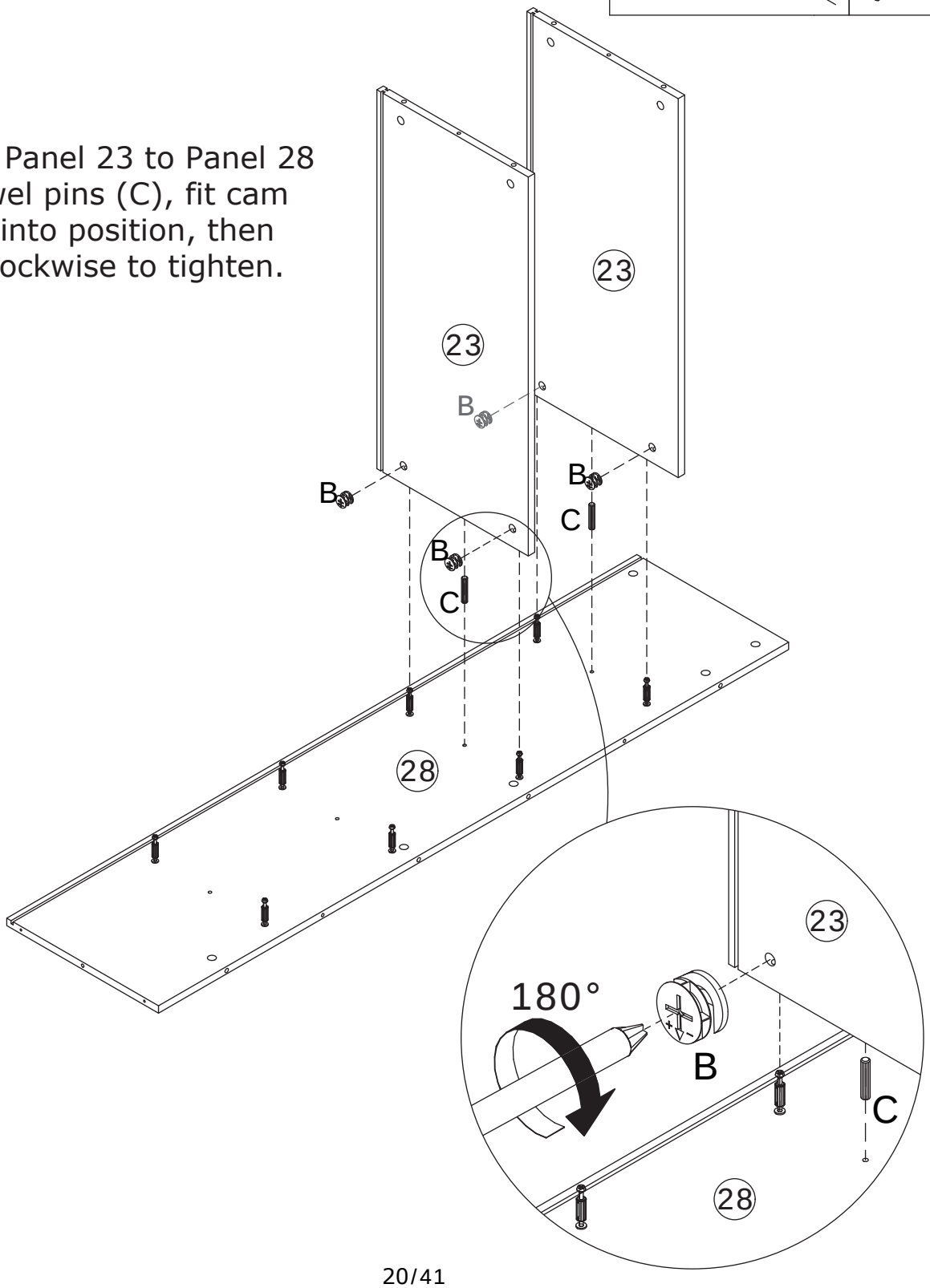

16

B x 4	C x 2	
		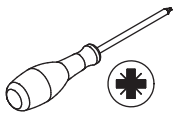
∅15 x 12 mm	∅8 x 30 mm	

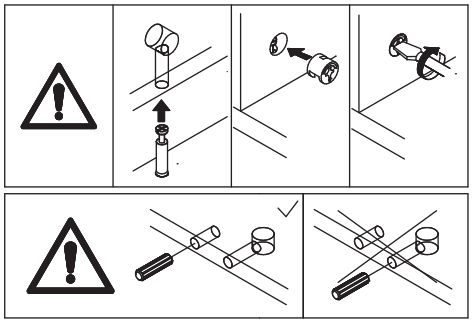

Connect Panel 23 to Panel 28 with dowel pins (C), fit cam lock (B) into position, then turn it clockwise to tighten.

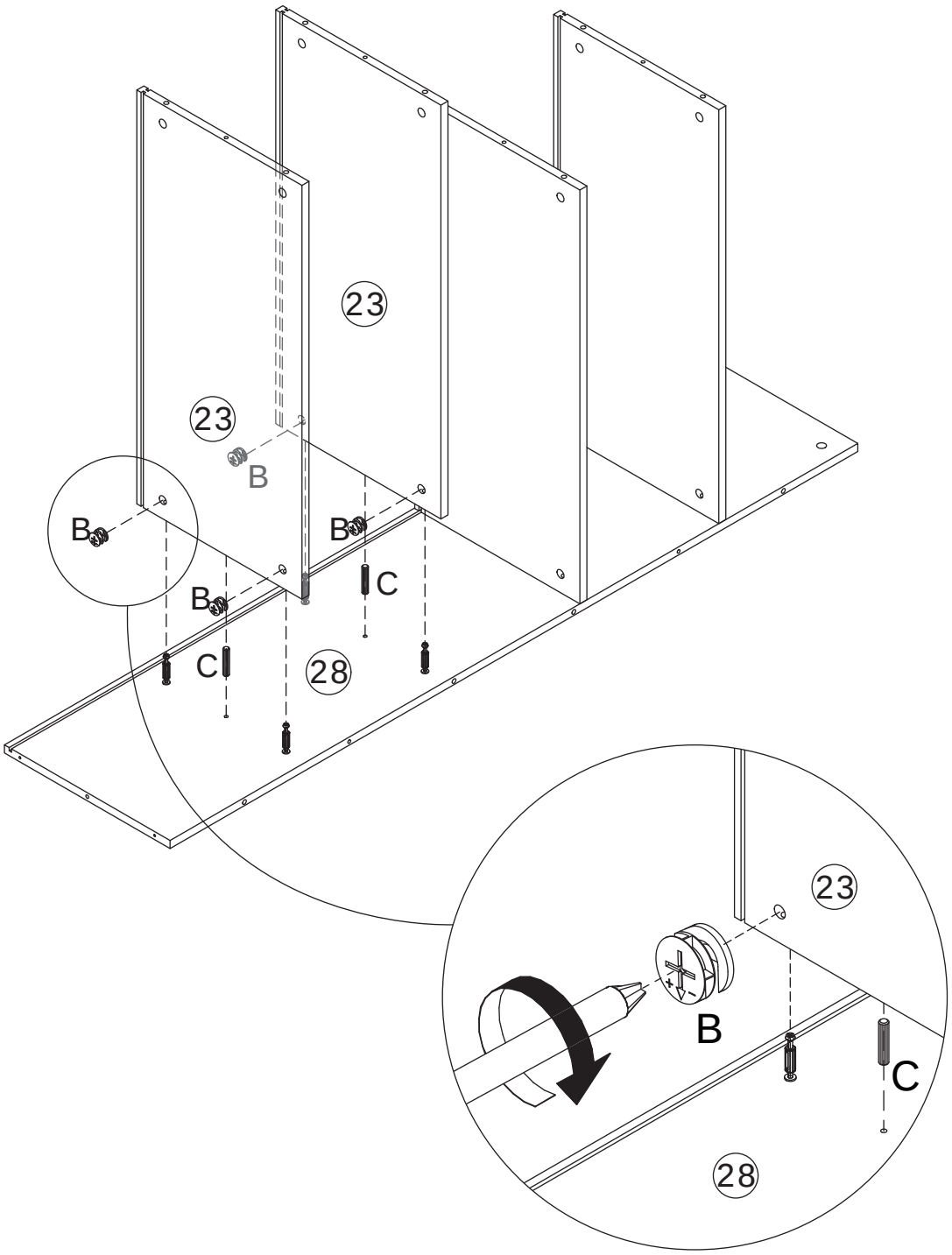

17

Insert Panel 22 along the reserved slots.

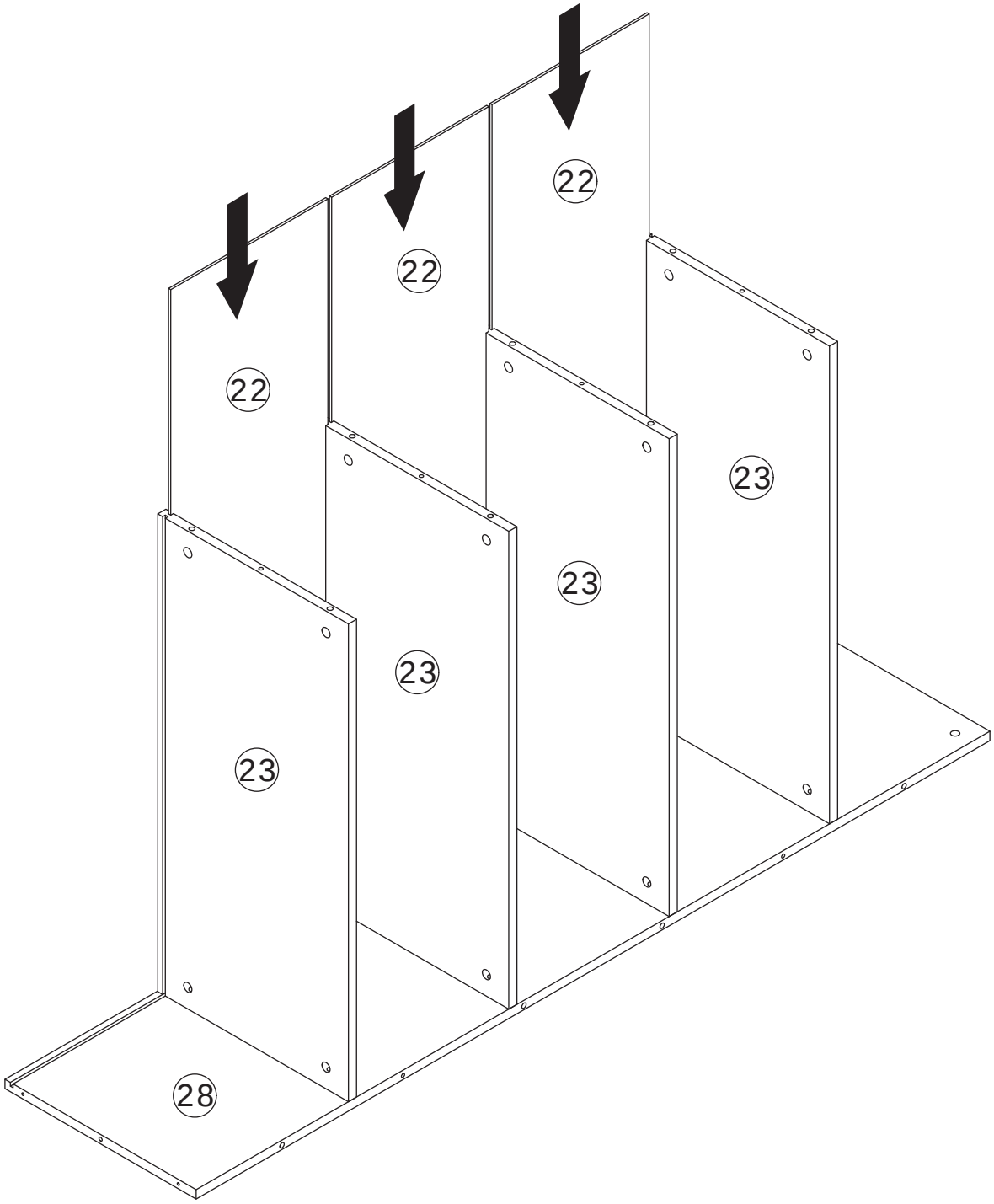

18

B x 8	C x 4	
		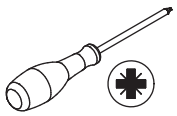
∅15 x 12 mm	∅8 x 30 mm	

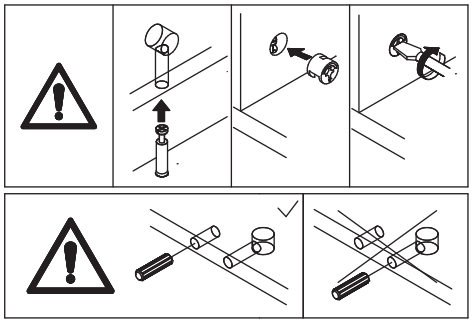

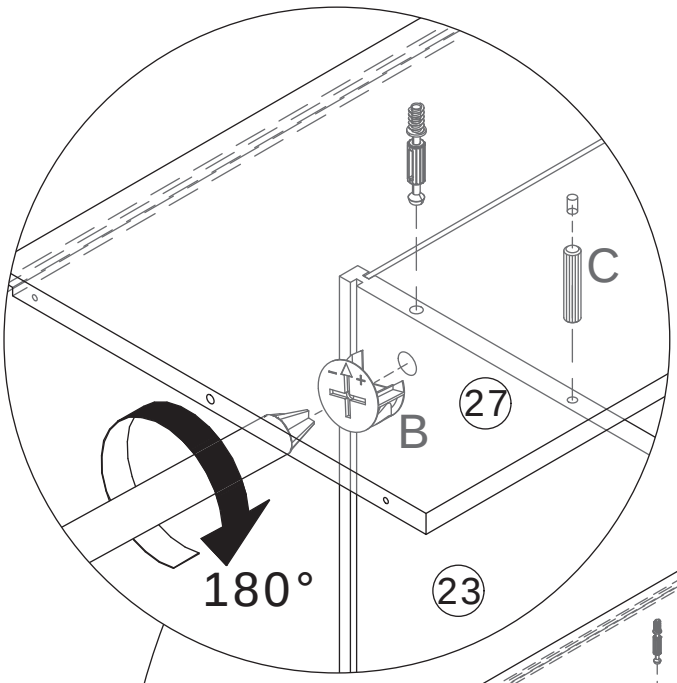

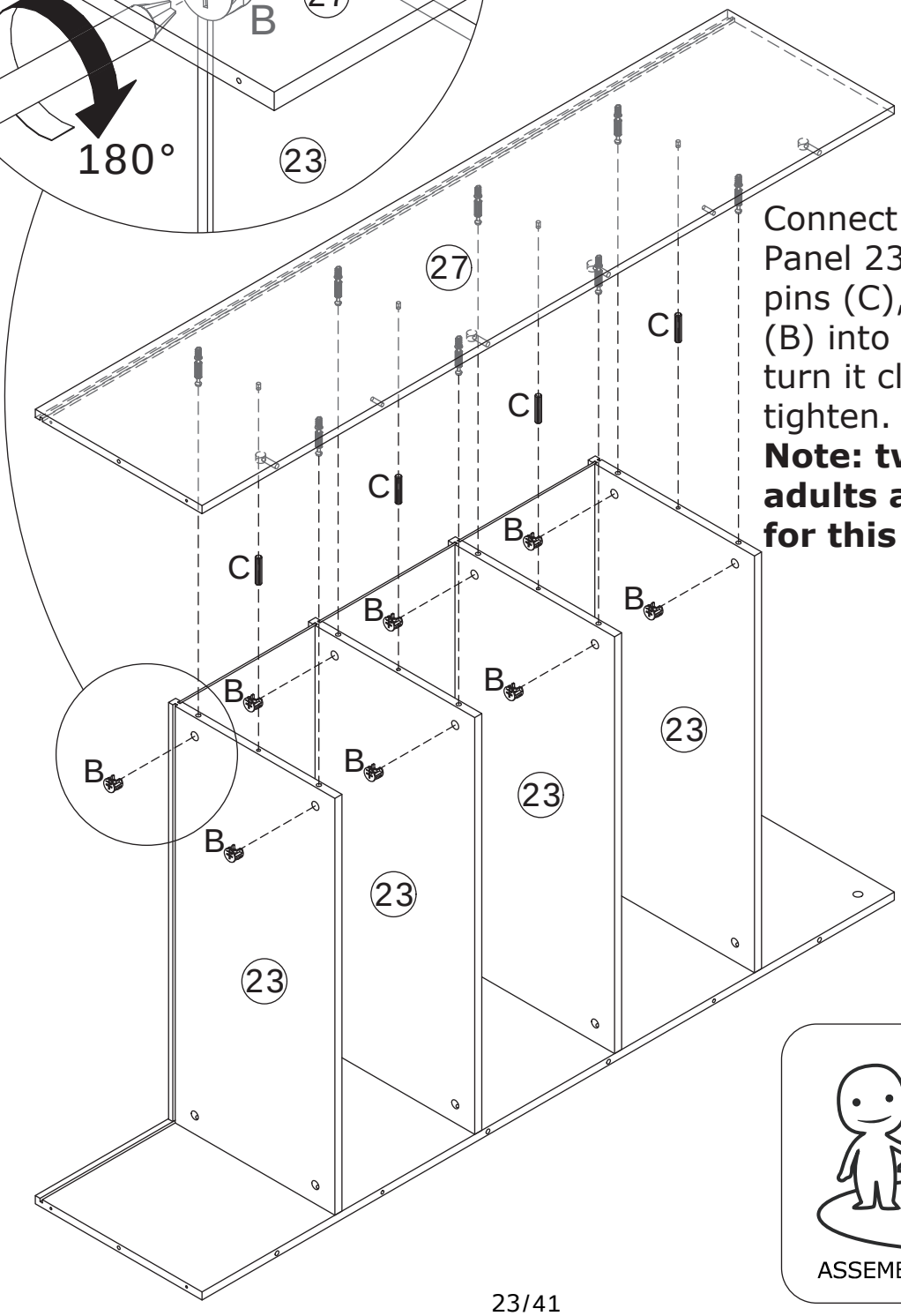

Connect Panel 27 to Panel 23 with dowel pins (C), fit cam lock (B) into position, then turn it clockwise to tighten.

Note: two or more adults are required for this step.

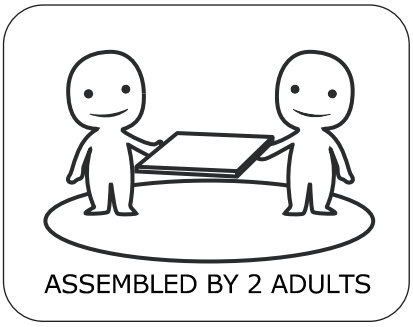

19

A x 2



M5 x 42 mm

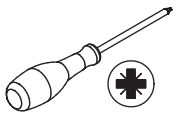

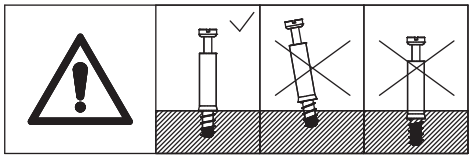

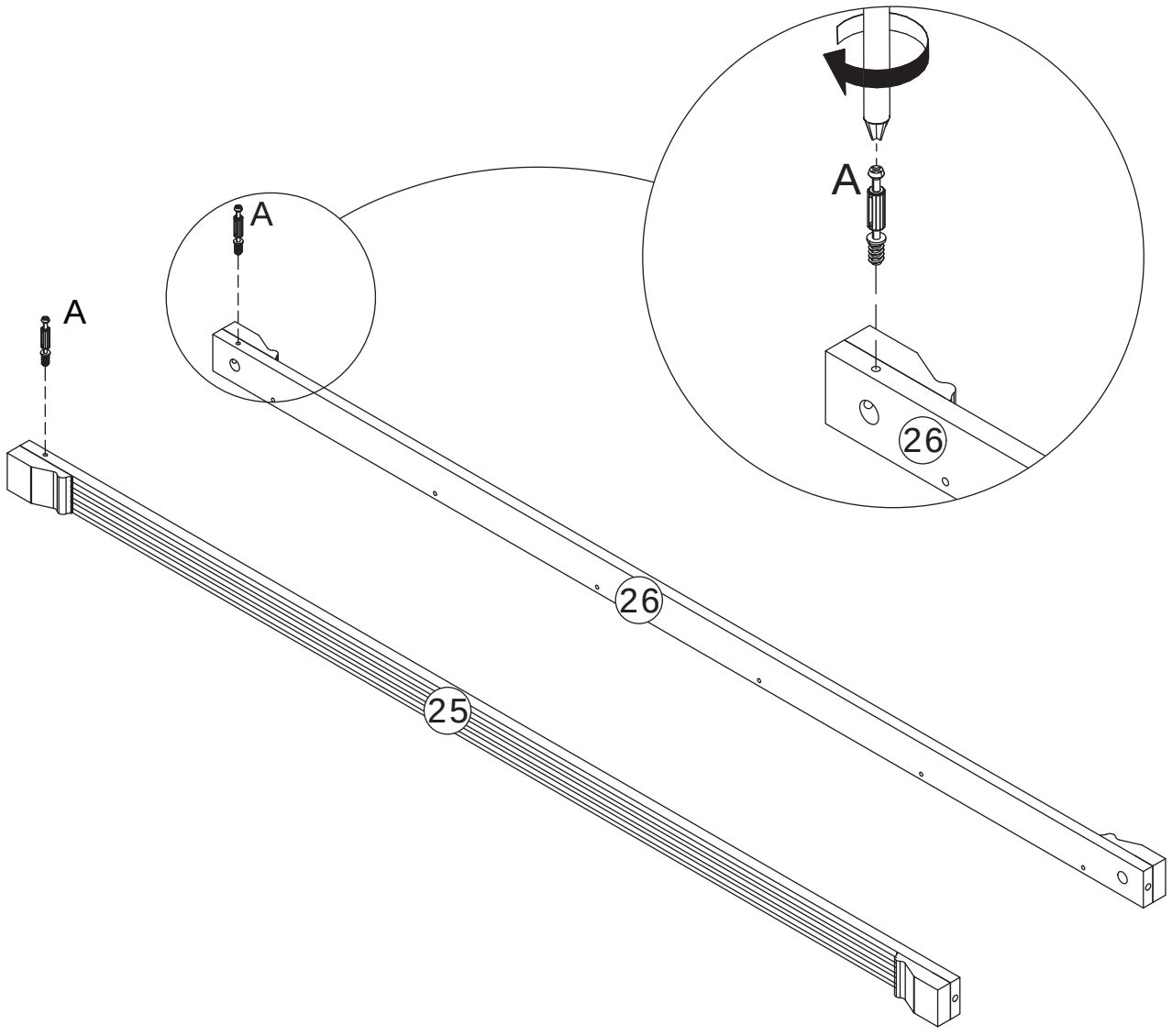

Fasten cam screws (A) to Panels 25 and 26.

20

A x 8	B x 2	
 M5 x 42 mm	 ∅15 x 12 mm	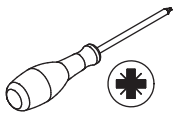

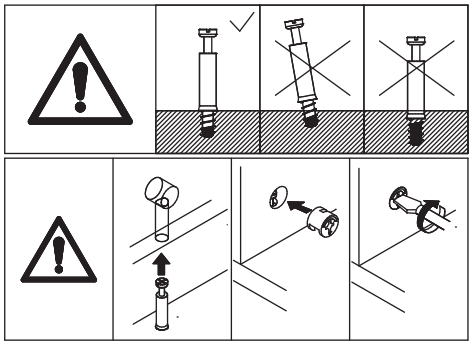

Fasten cam screws (A) to Panels 25 and 26.
Connect Panels 25 and 26 to Panel 29, fit cam lock (B) into position, then turn it clockwise to tighten.

21

B x 8	C x 4	
		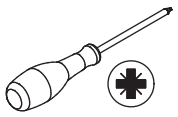
∅15 x 12 mm	∅8 x 30 mm	

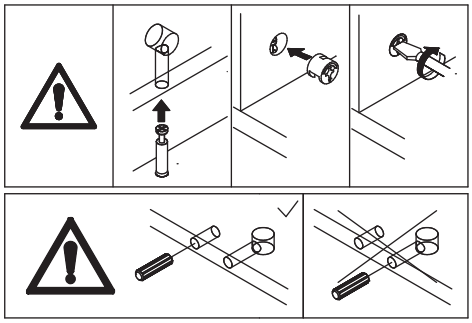

Connect Panels 25, 26 and 29 to Panels 27 and 28 with dowel pins (C), fit cam lock (B) into position, then turn it clockwise to tighten.

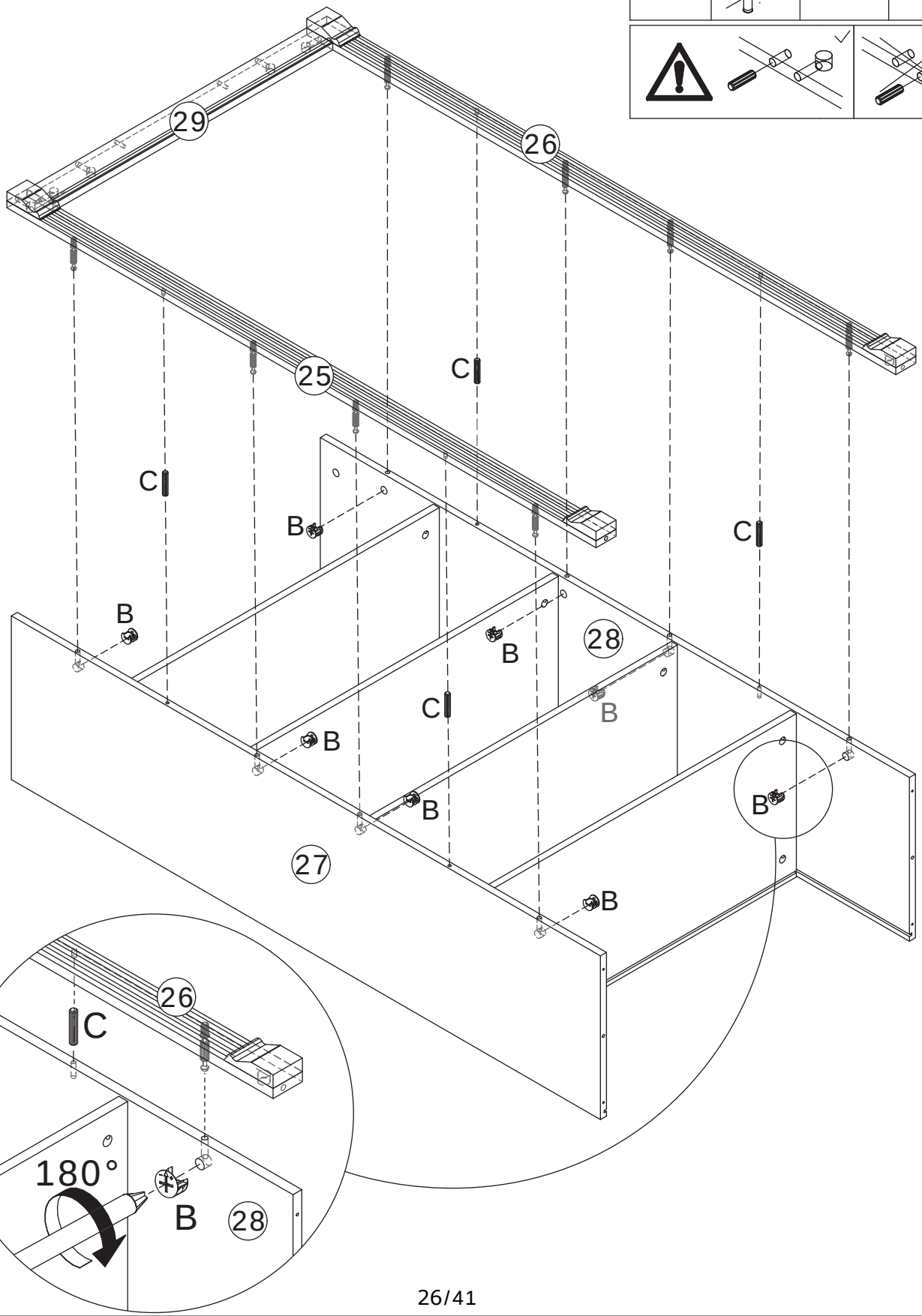

22

A x 18



M5 x 42 mm

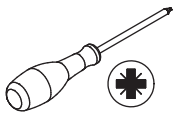

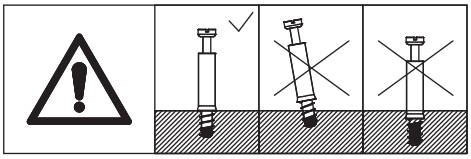

Fasten cam screws (A) to Panels 20 and 30.

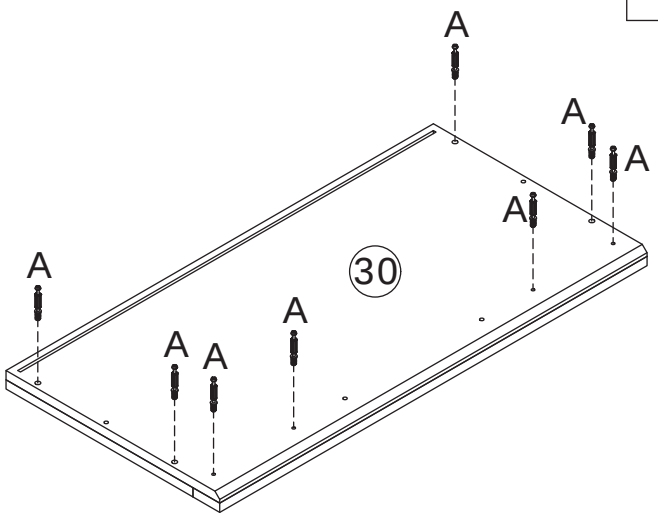

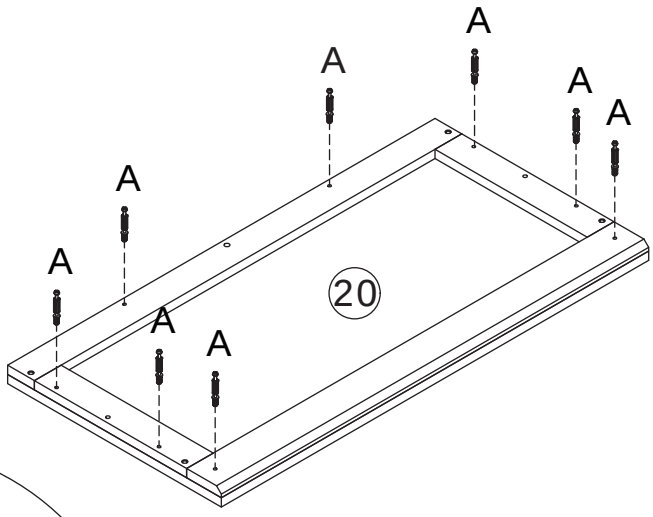

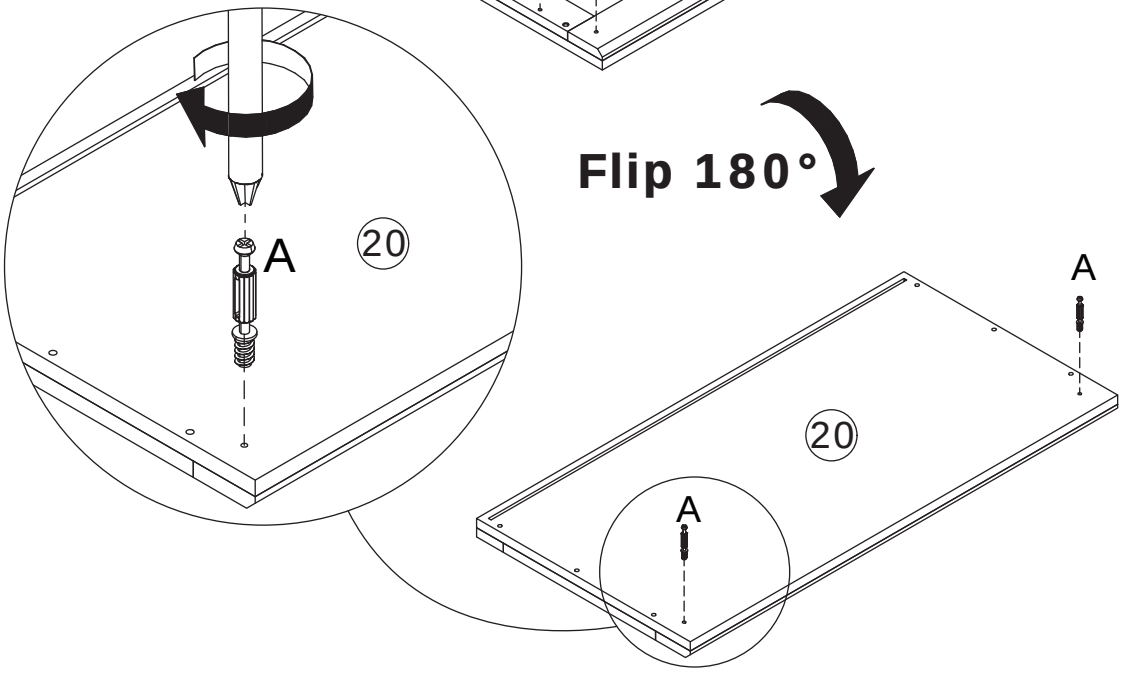

23

Insert Panel 22 along the reserved slots.

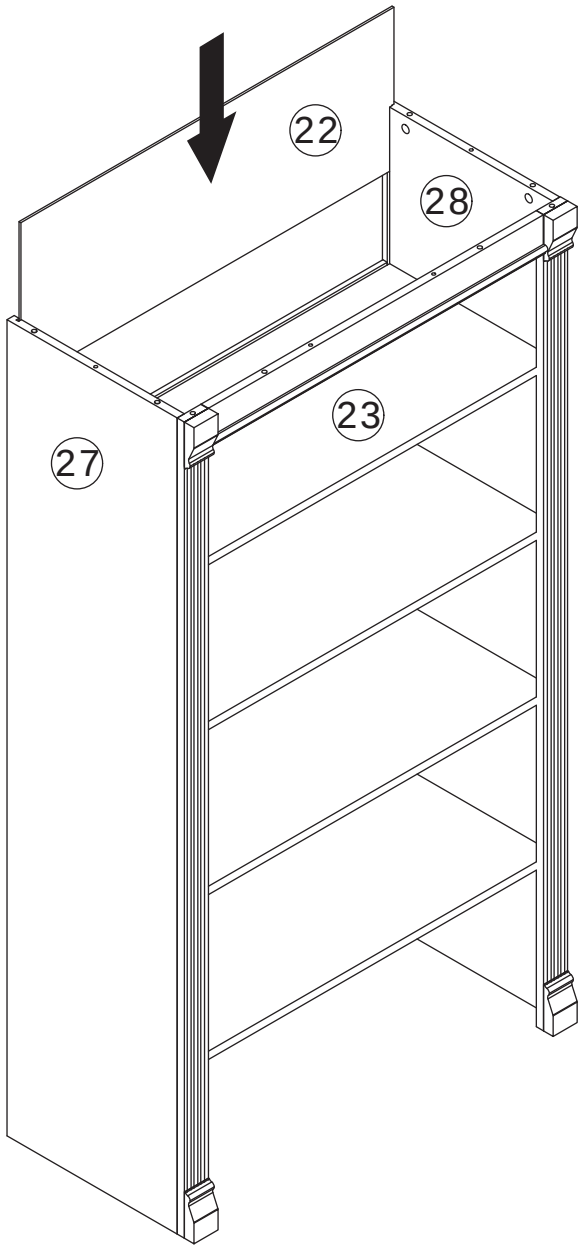

24

B x 8	C x 4	
		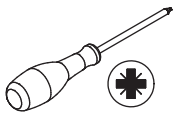
∅15 x 12 mm	∅8 x 30 mm	

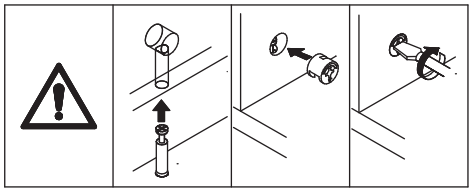

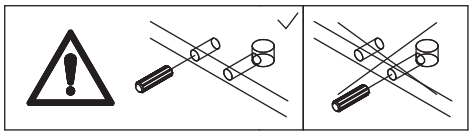

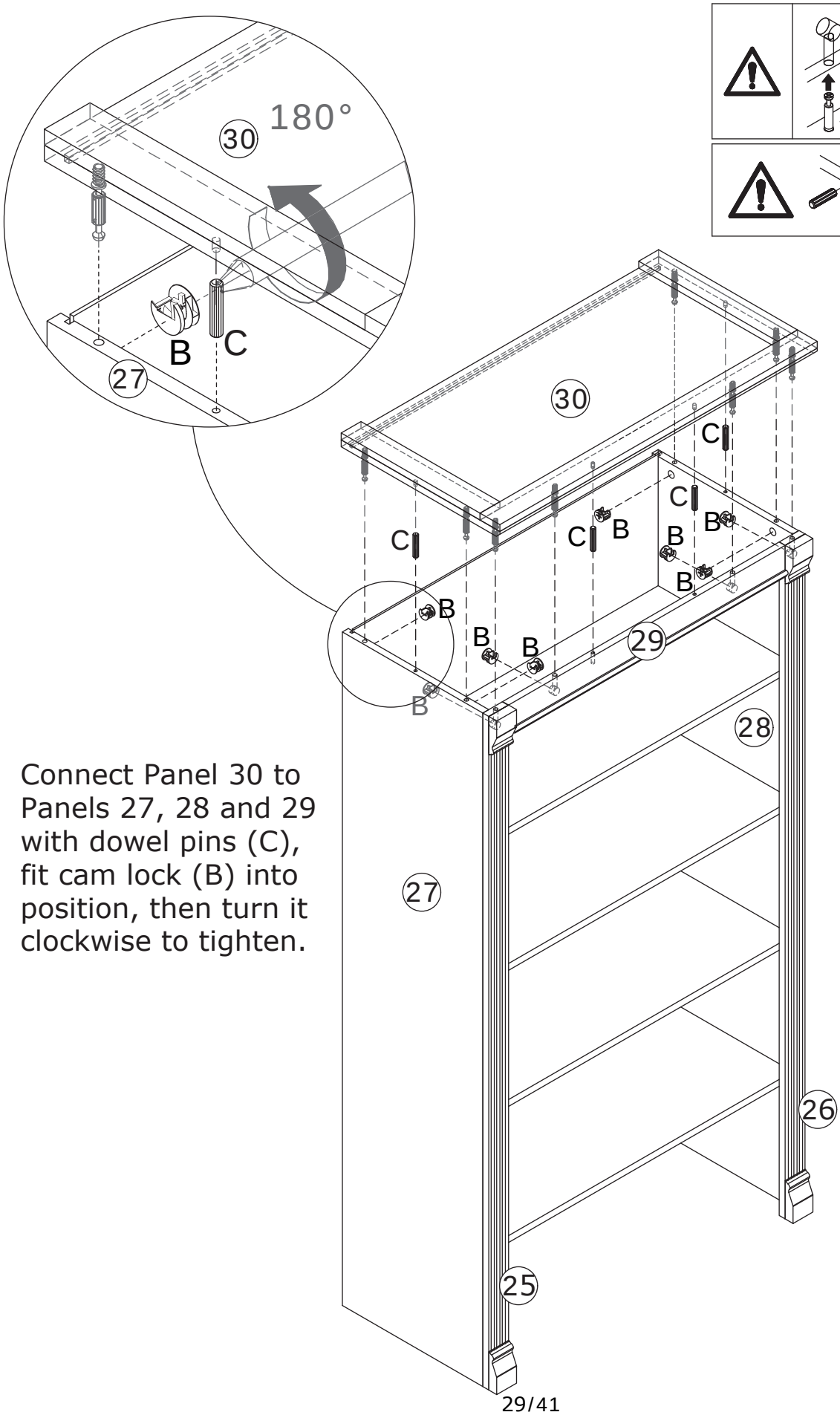

Connect Panel 30 to Panels 27, 28 and 29 with dowel pins (C), fit cam lock (B) into position, then turn it clockwise to tighten.

25

Flip 180°

Flip the combined unit over,then insert Panel 22 along the reserved slots.
Note: two or more adults are required for this step.

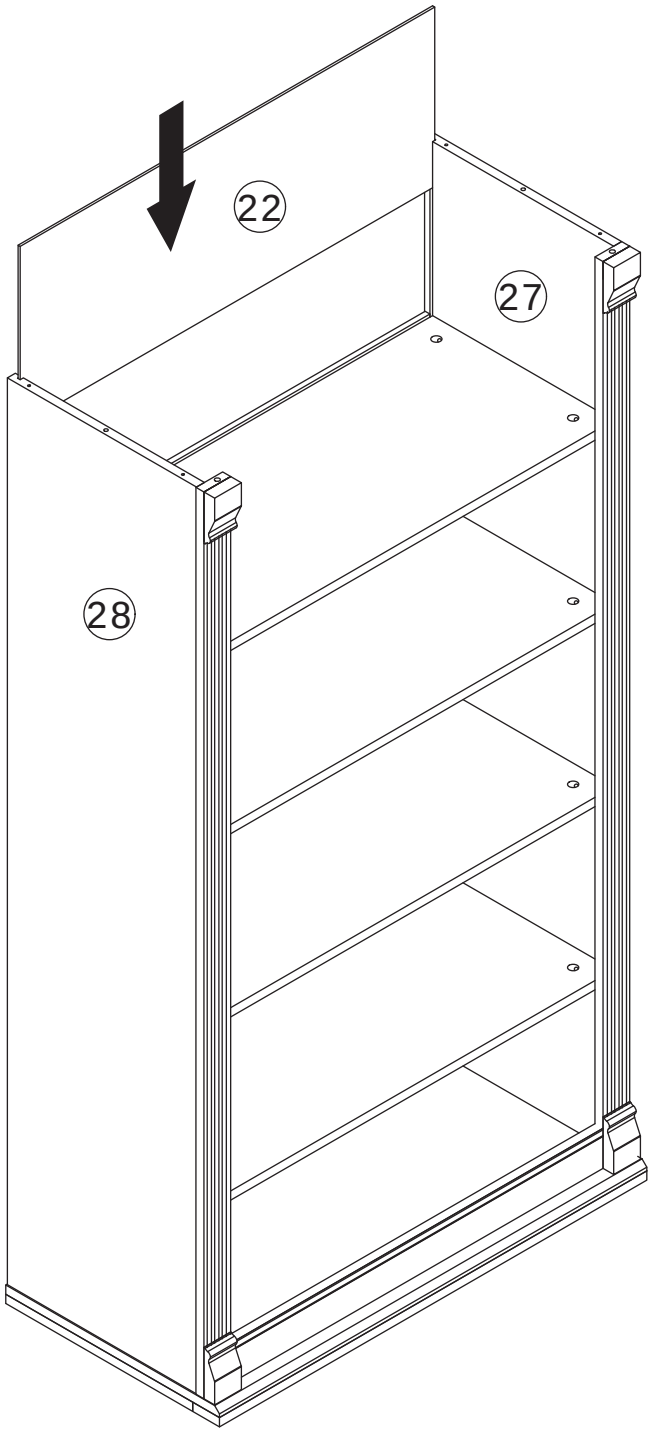

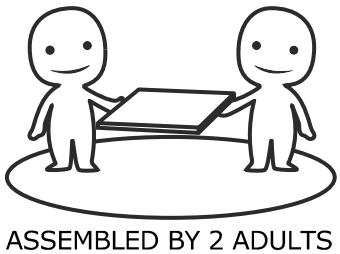

26

B x 2	C x 2	D x 4	
			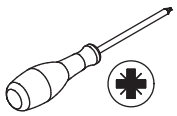
∅15 x 12 mm	∅8 x 30 mm	M7 x 50 mm	

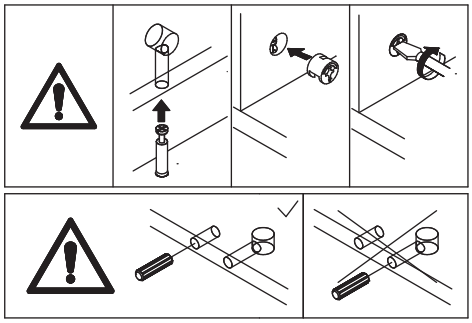

Connect Panel 20 to Panels 25, 26, 27 and 28 with dowel pins (C), fit cam lock (B) into position, then turn it clockwise to tighten. Then secure it to Panels 27 and 28 with screws (D).

27

B x 8	C x 3	
		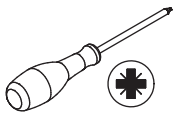
∅15 x 12 mm	∅8 x 30 mm	

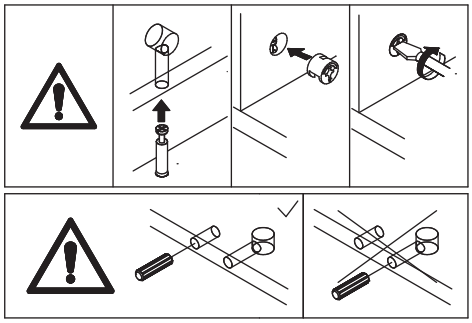

Connect Panel 20 to Panels 1, 2, 3, 4 and 24 with dowel pins (C), fit cam lock (B) into position, then turn it clockwise to tighten.

28

F x 6



M5 x 40 mm

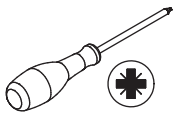

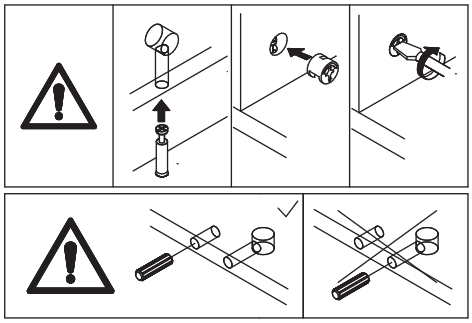

Secure Panels 13, 14 and 16 to Panel 15 with screws (F).
Insert Panel 18 along the reserved slots.

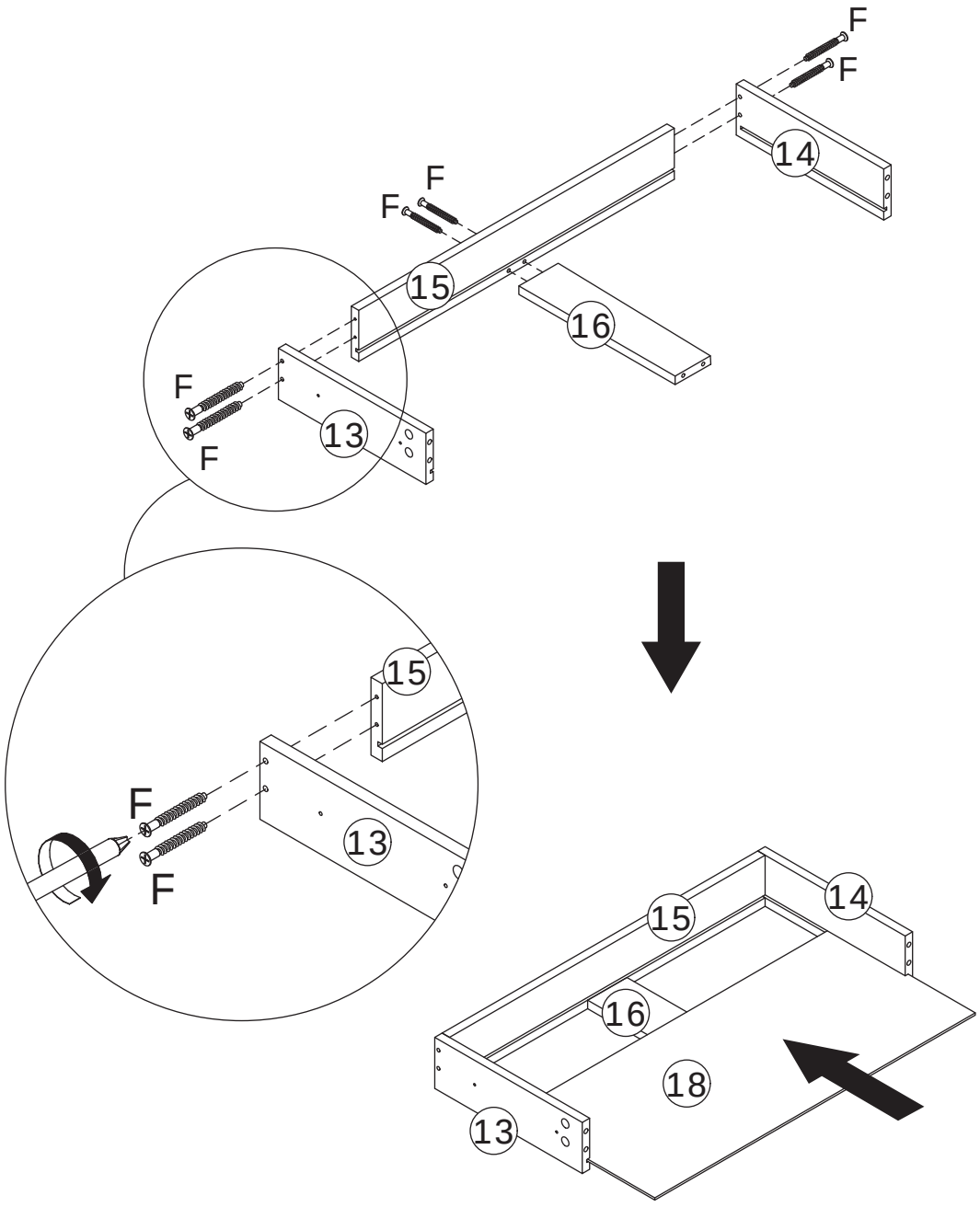

29

A x 6	B x 6	G x 2	K x 2	
				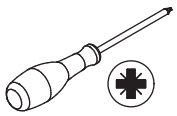
M5 x 42 mm	∅15 x 12 mm	M4 x 20 mm	6018	

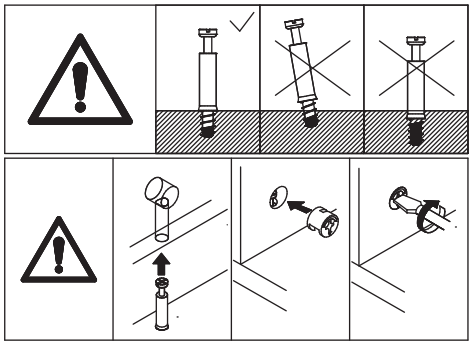

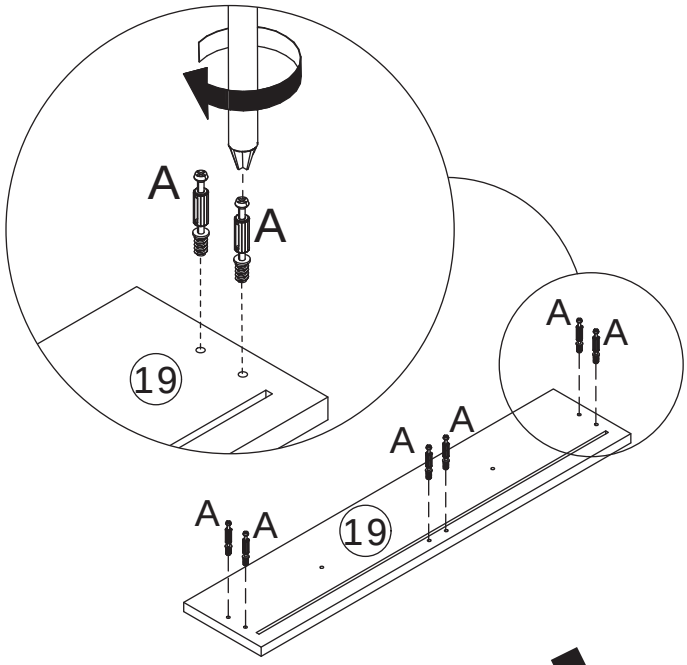

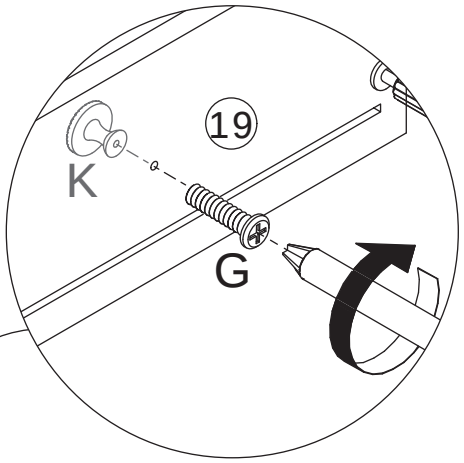

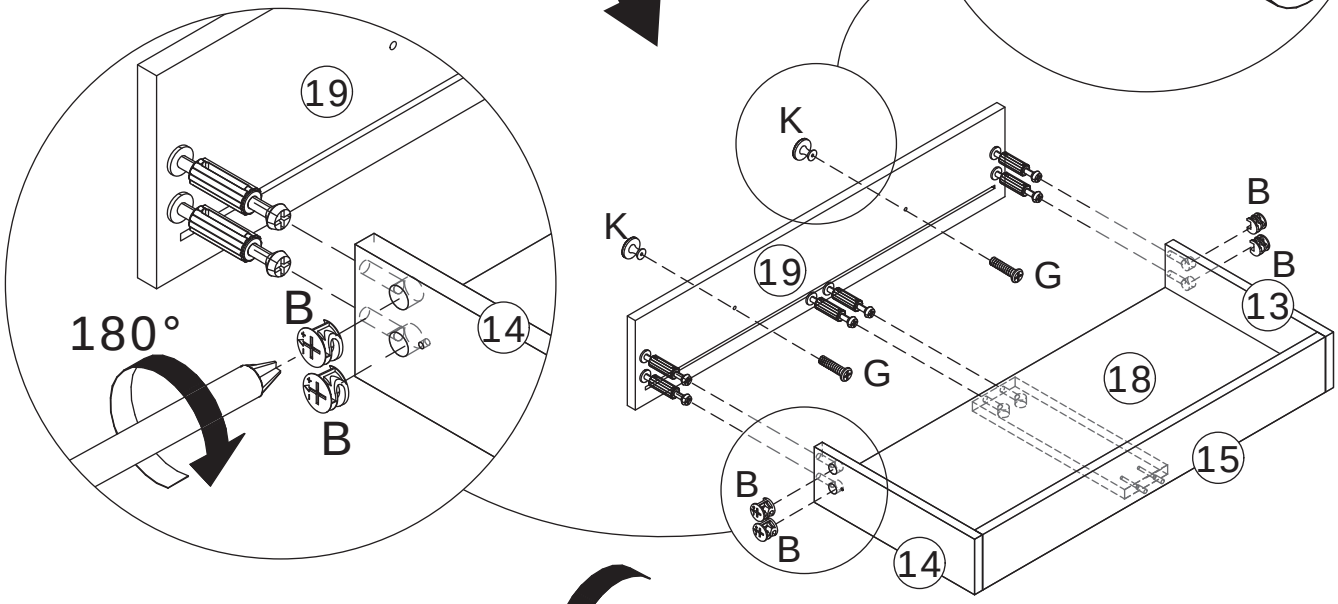

Flip 180°

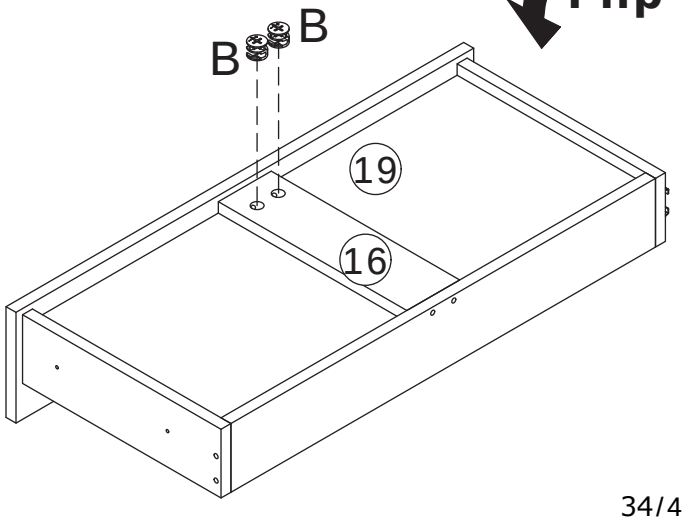

Fasten cam screws (A) to Panel 19. Connect Panel 19 to Panels 13 and 14, fit cam lock (B) into position, then turn it clockwise to tighten. Secure knobs (K) to Panel 19 with screws (G).
Flip the combined unit over, insert cam locks (B) into Panel 16 and tighten clockwise.

30

E x 4



M3.5 x 14 mm

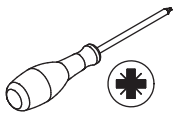

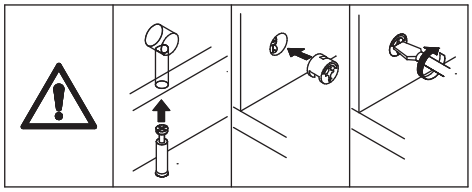

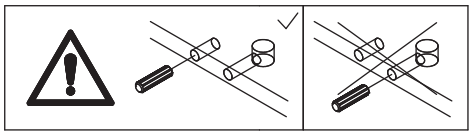

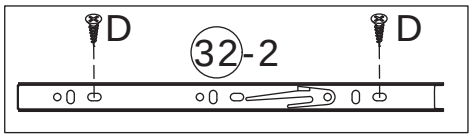

Secure drawer slides (32-2) to Panels 13 and 14with screws (D).
Install the drawer into the combined unit as shown.

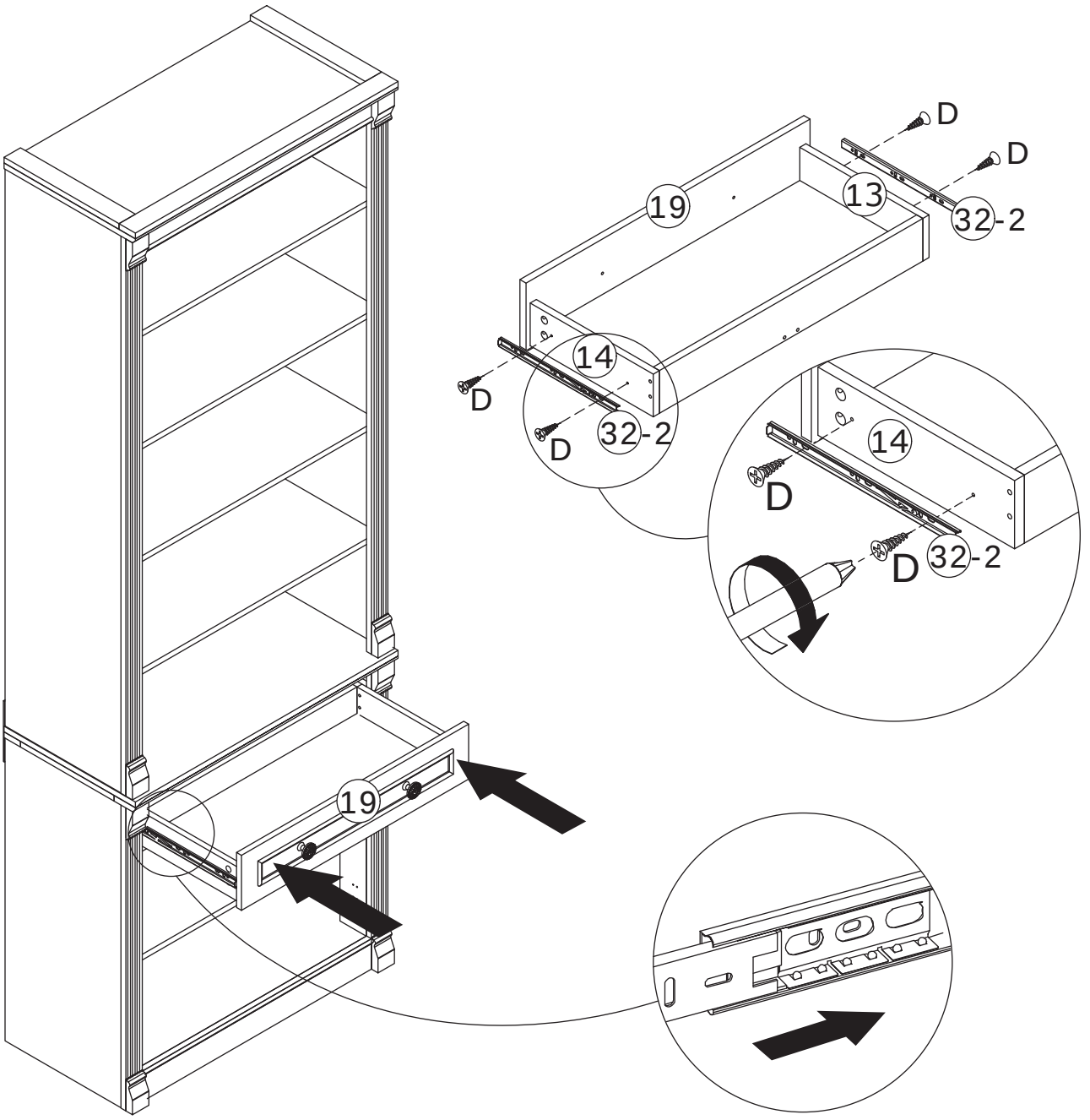

31

E x 8	G x 2	J x 4	K x 2	
		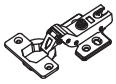		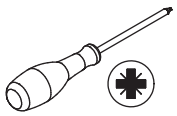
M3.5 x 14 mm	M4 x 20 mm	15mm-DW	6018	

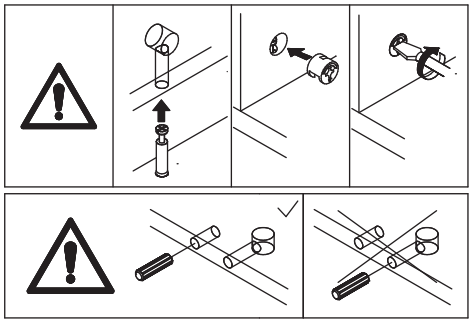

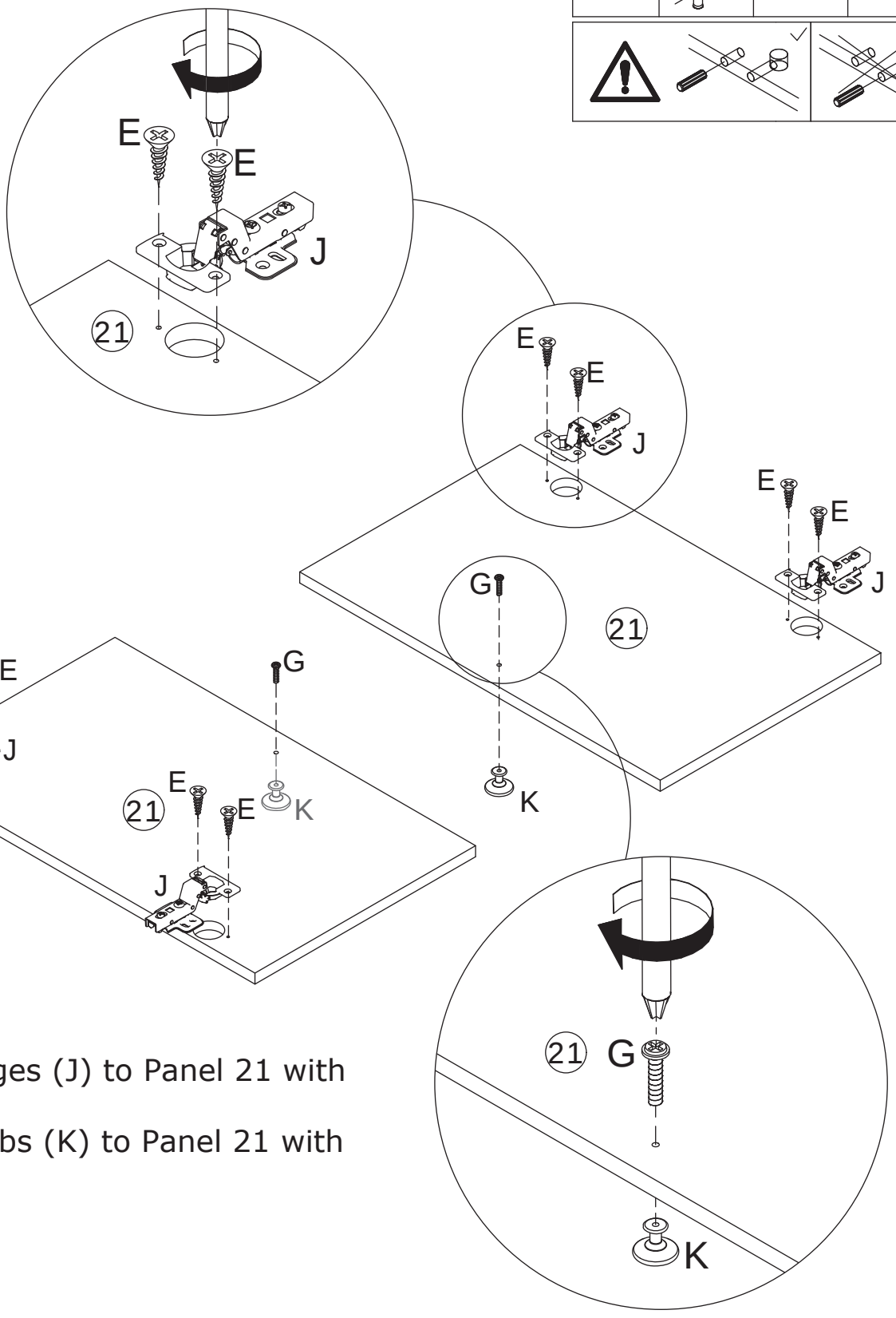

Secure hinges (J) to Panel 21 with screws (E).
Secure knobs (K) to Panel 21 with screws (G).

32

E x 16



M3.5 x 14 mm

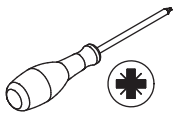

Secure Panel 21 to Panels 7 and 8 respectively via the hinges with screws (E).

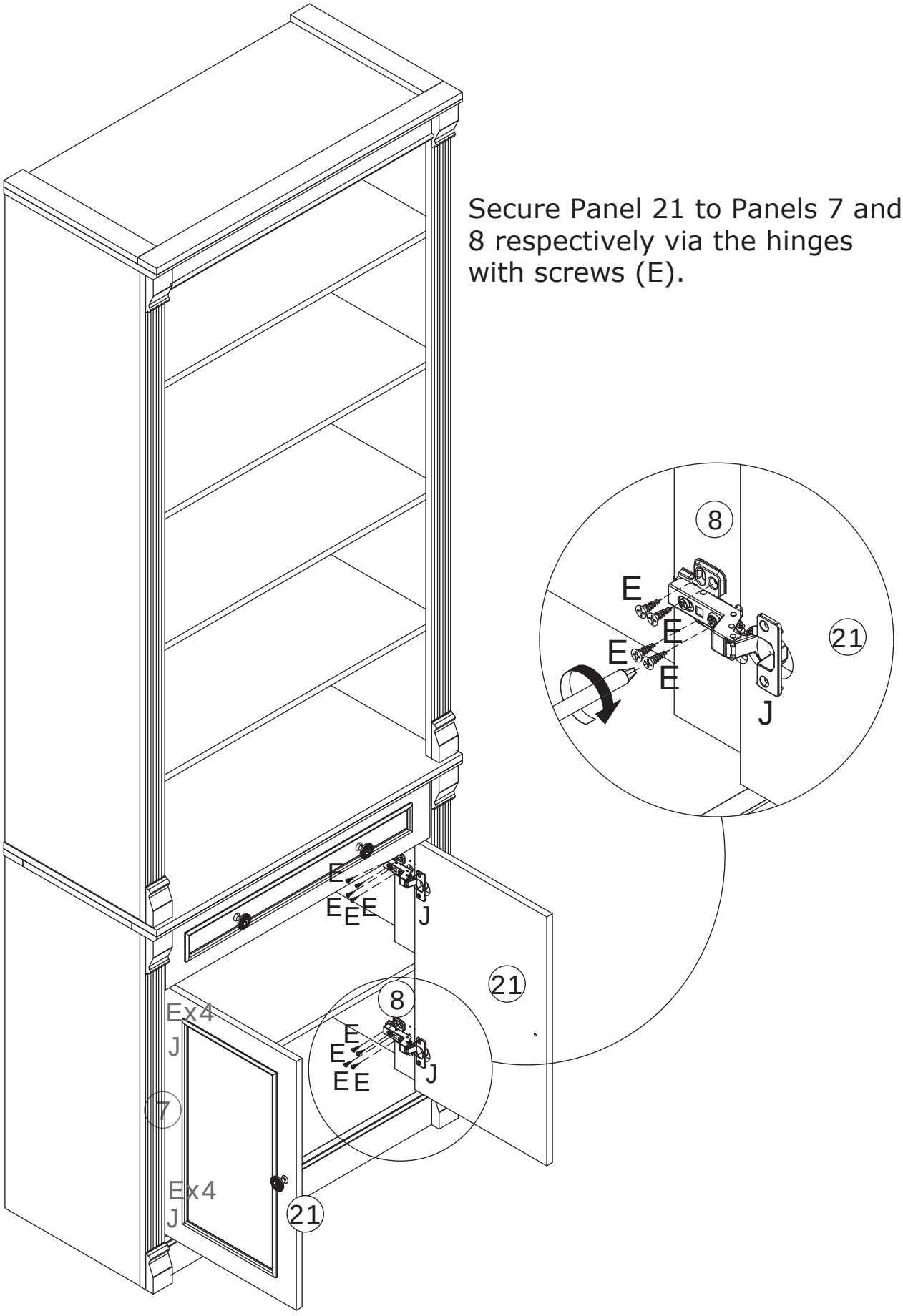

33

E x 16	N x 2	
 M3.5 x 14 mm	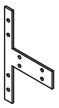	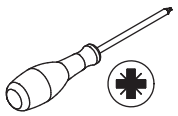

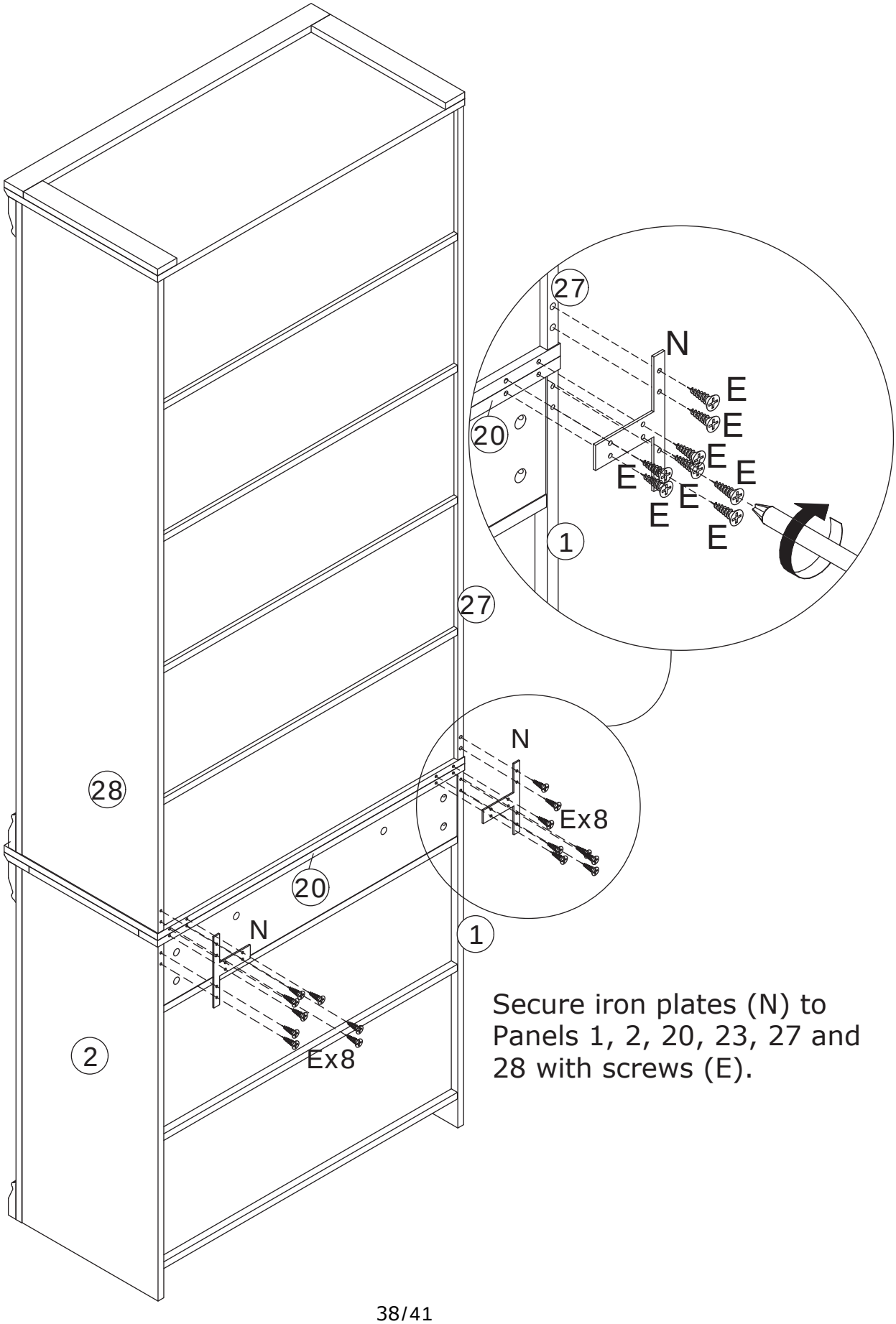

Secure iron plates (N) to Panels 1, 2, 20, 23, 27 and 28 with screws (E).

34

E x 34	M x 34	O x 20	
 M3.5 x 14 mm		 ∅21 mm	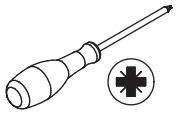

Insert clips (M) into the back panel slots, and secure with screws (E). Apply masking stickers (O) onto the cam locks.

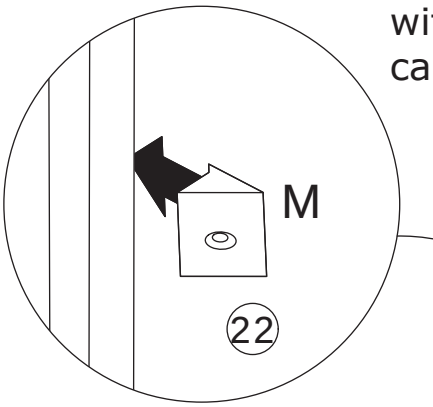

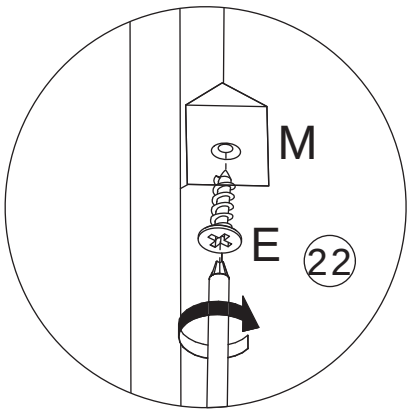

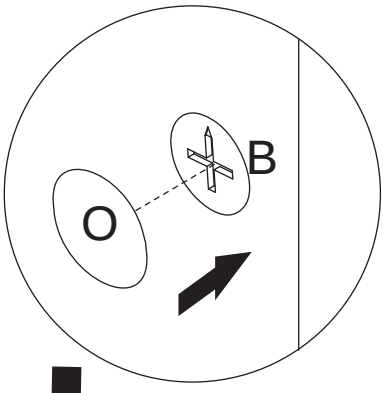

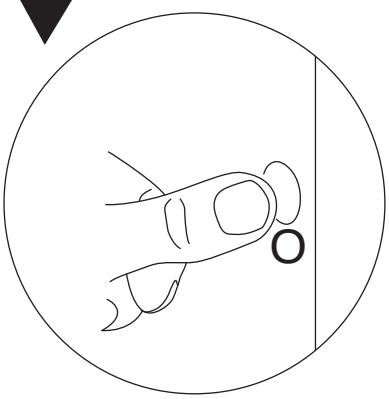

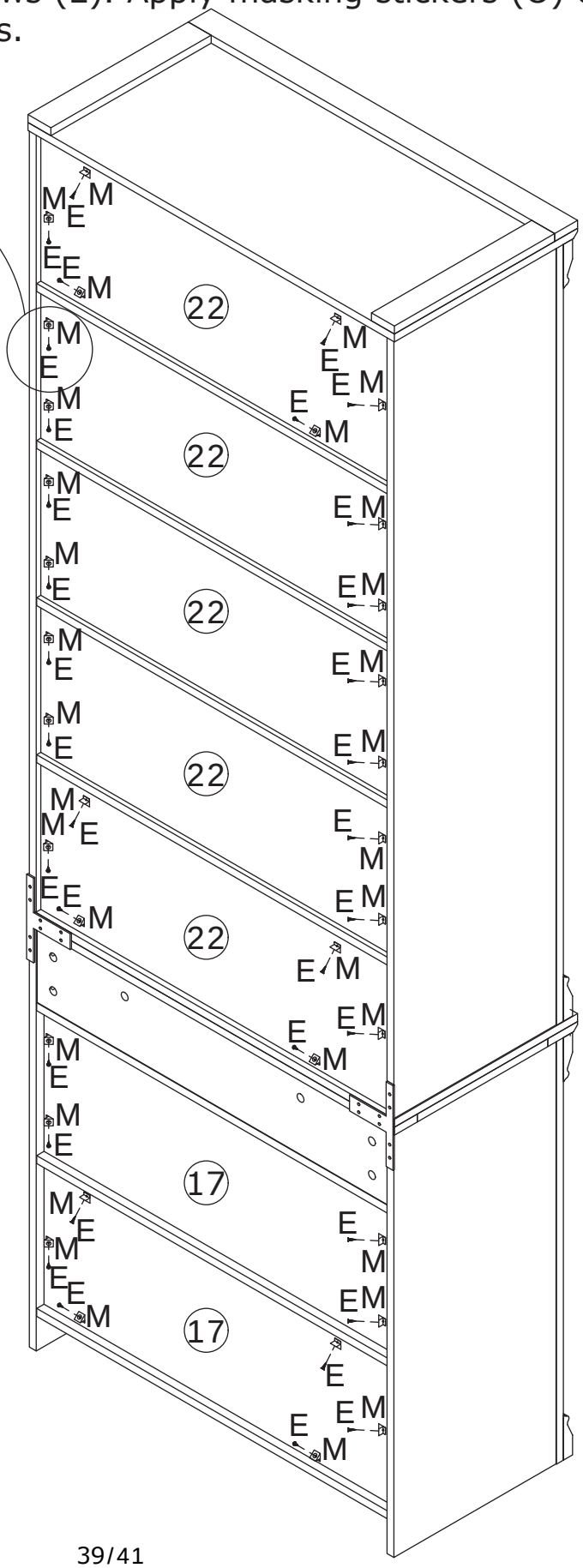

35

E x 2	L x 2	
 M3.5 x 14 mm	 ∅8 x 60 mm ∅M5 x 55 mm	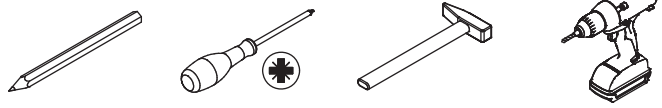

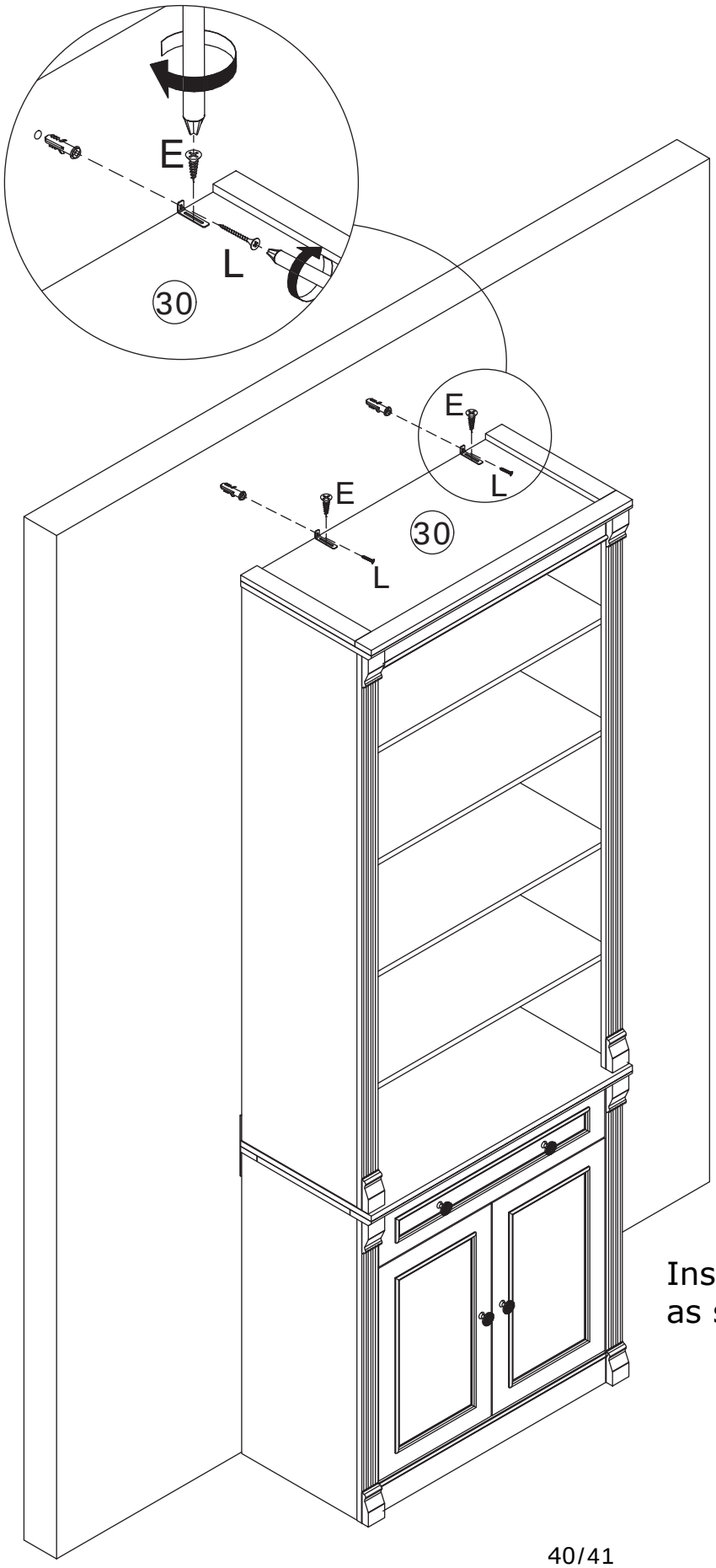

1.

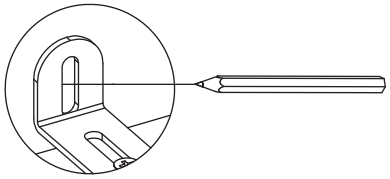

2.

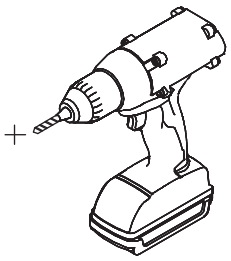

3.

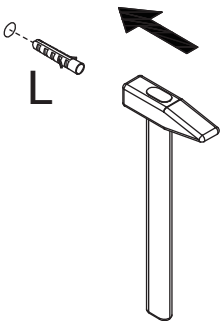

4.

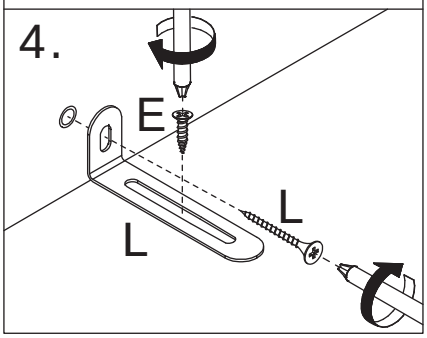

Install the anti-tip device as shown.

36

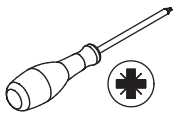

If the door panels are not aligned,
please adjust the screws on the
hinges according to the illustration.

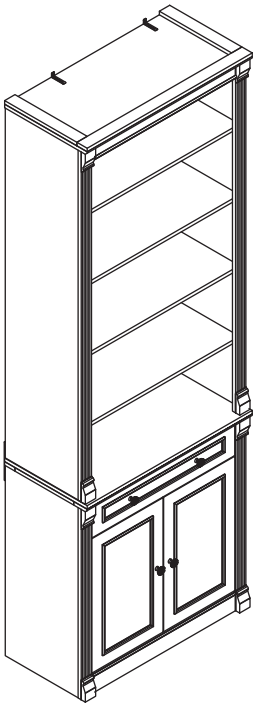

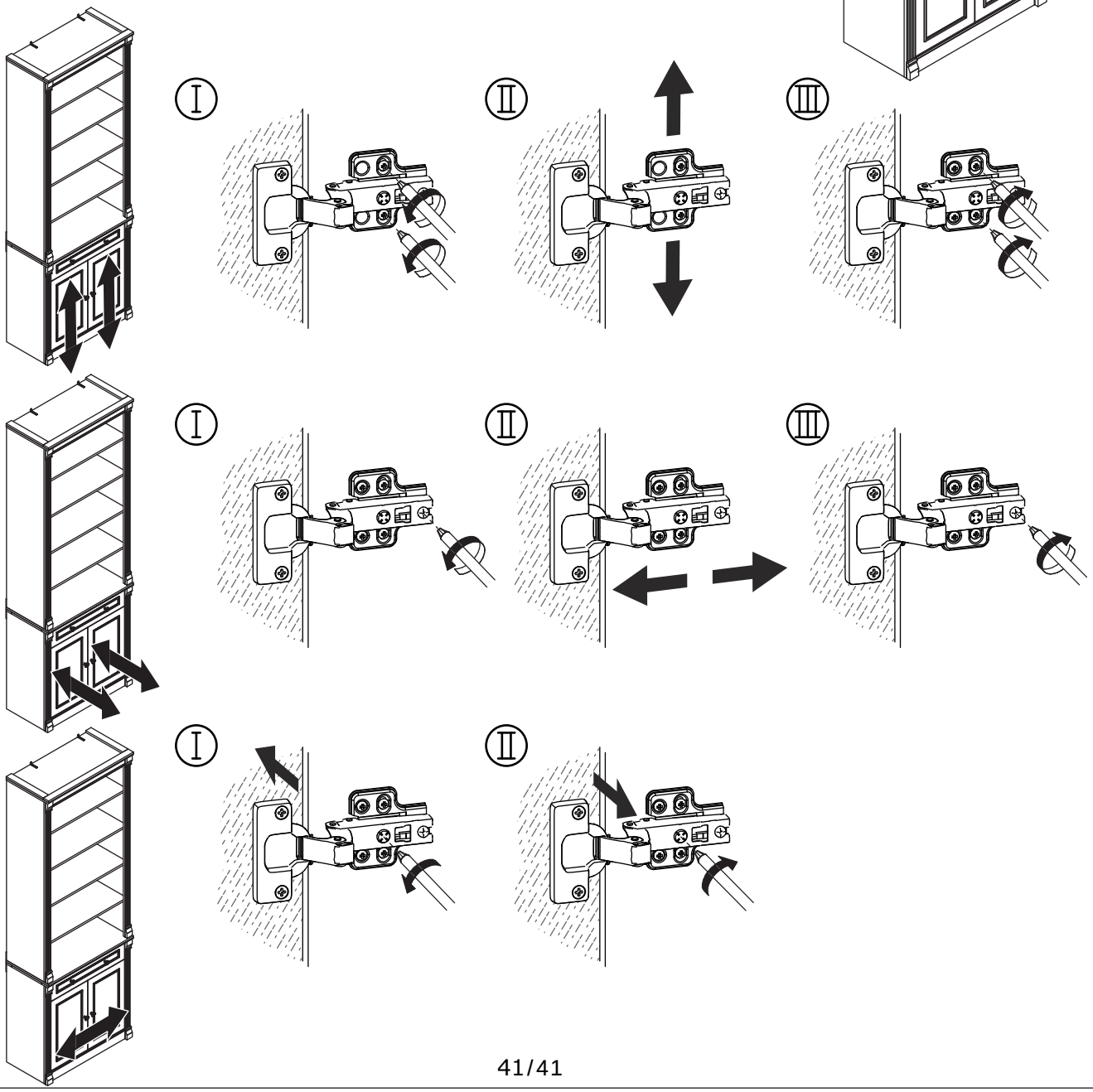

WARRANTY

WARRANTY CLAIMS

•There is a 30-day warranty for broken furniture or any other problems that do not work properly. The warranty will start from the date of purchase which must be verified by proof of purchase.

•Before making a claim, we may be able to answer your query, simply call us. Please leave your purchase order number, along with some details of the problem, if you want a replacement part. We will arrange within 48 hours. If there is out of stock, we will reply with a shipping date.

•The product must be used in accordance with the instructions provided. For health reasons.

•For other reasons, if the furniture needs to be returned, it must be cleaned and dried and operated within 30 days of receipt.

Type of Warranty Claim

•Failure to follow the furniture instructions will invalidate the warranty. Attention please.

•Does not include damage during installation, but includes damage during transportation.

Scope of responsibility

•Shall not bear any responsibility for misuse or user damage and / or loss of parts during the installation of furniture.

•After using, the damage and scratches of the furniture are not covered by the warranty.

The Warranty Relates to All Bought in The Us and Covers The Following Areas

•Sheet parts: 1 month from the date of purchase.

•Electrical parts: 1 month from the date of purchase.

RETURNS

CHANGED YOUR MIND AND NEED TO RETURN YOU ITEM?

PLEASE FOLLOW THE BELOW INSTRUCTIONS:

- If you have purchased and have simply changed your mind, follow the retailer's instructions for returns.

DEFECTIVE ITEMS

- If your item is defective in any way, i.e. it doesn't work but you can't identify why, in the first instance, please call us.

DAMAGED ITEMS

- If you receive an order with obvious shipping damage from the retailer, then we suggest the delivery is refused. If the delivery has been accepted and then shipping damage is found, please follow the specific instructions advised by the retailer.
  In all circumstances please save all packaging material and paperwork for the order.
  Please be aware that if you dispose of packaging material or attempt to return the merchandise without contacting the fulfiller, you jeopardise your chances of making a claim, and you may not receive a credit for the return.

AFTER-SALES CONTACT



