Assembly&installation Instructions

CAUTION: Read instructions carefully and turn electricity off at main circuit breaker panel before beginning installation.

HARDWARE LIST			
PARTS:	**QUANTITY:**	**PARTS:**	**QUANTITY:**
(**A**): 8/32*20MM SCREWS	2 PCS	(**D**): Rubber washer	2 PCS
(**B**): WIRE CAPS	3 PCS (1 pcs for sqare)		
(**C**): LOCK NUTS	2 PCS		

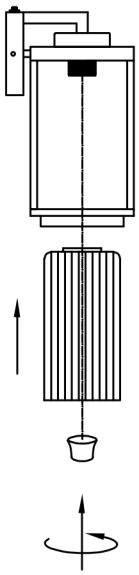

STEP 1: Place the glass into the lamp frame, and tighten it with a black screw ring to secure it

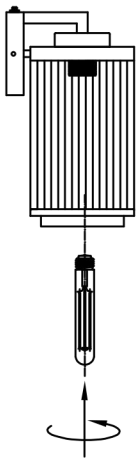

STEP 2: Twist E26 bulbs. (**Excluding**)

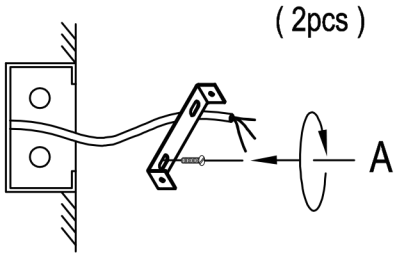

STEP 3: Install mounting plate by using 2pcs mounting screws **A** .

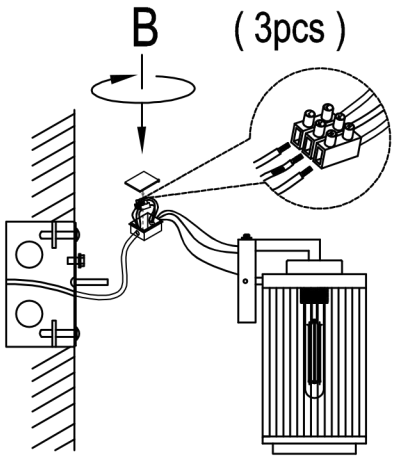

SENSOR
(Automatically turn off in the daytime and turn on at night)

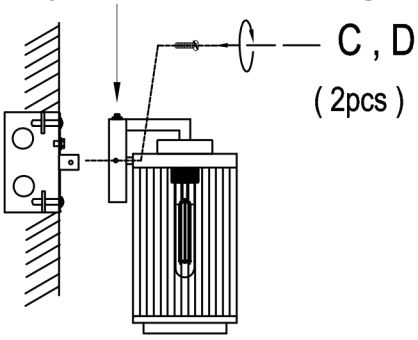

STEP 4:

Connect the Live, Neutral, a corresponding wires in the t

STEP 5: Install backplate by using 2 pcs lock nuts **C** and 2 pcs rubber washers **D**.