ASSEMBLING & INSTALLATION INSTRUCTIONS

The drawing shown may not exactly match the product enclosed. However, the installation instructions do apply to this product.

- **WARNING! SHUT POWER OFF AT FUSE OR CIRCUIT BREAKER.**
- **ATTENTION! COUPER LE COURANT AU FUSIBLE OU UN DISJONCTEUR.**

ASSEMBLING THE FIXTURE (Fig.1)

1. Shut off the power at the circuit breaker box. Remove old fixture and all hardware from Junction Box. Carefully unpack your new fixture and lay out all the parts on a clear area. Take care not to lose any small parts necessary for installation.
2. Attach the mounting plate to the junction box using two junction box screws as shown. The side of the mounting plate marked “GND” must face out. **The junction box is not included.**
3. Guide fixture wires through hole in center of mounting plate.
4. Follow wiring instructions carefully (see fig.2)
5. Place the lamp body (B) onto the mounting plate，aligning the backplane holes with screw hole of the mounting plate in side, then lock it securely with mounting screws.
6. Install the light bulbs(not included) in accordance with the fixture’s specifications. **DO NOT EXCEED THE MAXIMUM WATTAGE RATING!**
7. Raise the glass shades(A) insert the lamp holder and turn it until tighten.

CONNECTING THE WIRES (Fig.2)

1. Connect the electrical wires as follows. Connect the Black wire from the fixture to the black house (hot) Wire. Connect the white wire from the fixture to the white (neutral) house wire. Make sure all wire nuts are secured. You may wrap the connections with electrical tape. If your junction box has a ground wires (green or bare copper) connect fixture’s ground wire to it. Otherwise attach the bare copper fixture wire to the green ground screw on the mounting plate.
2. Tuck the wire connections neatly into the wall junction box.

Your installation is now complete. Return power to the junction box the fixture.

FIG.1

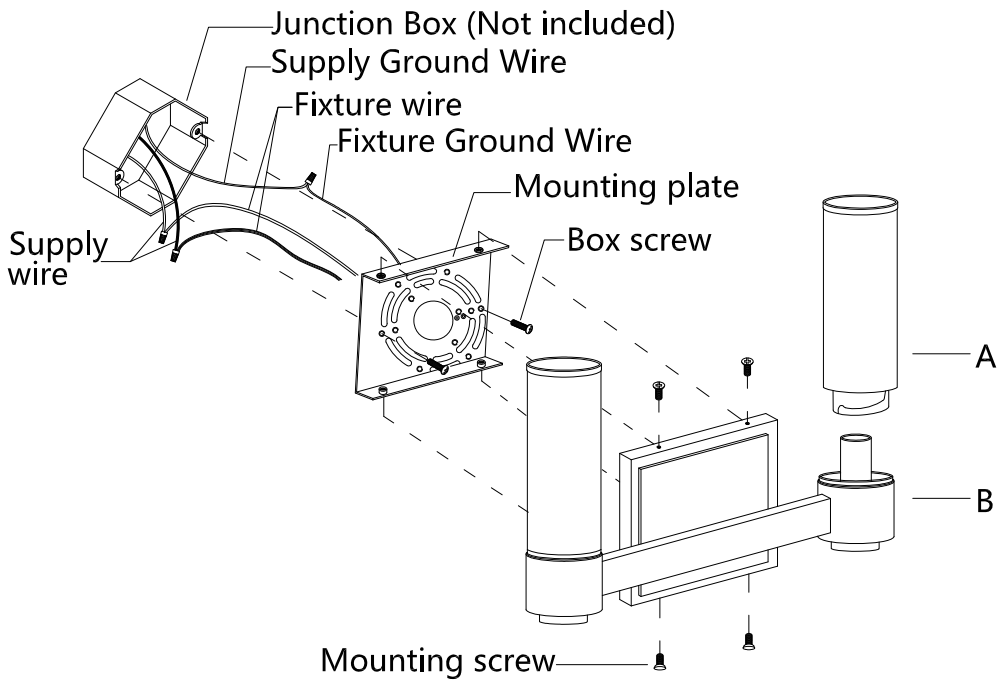

FIG.2

