Saddle Stool Chair

OWNER'S MANUAL

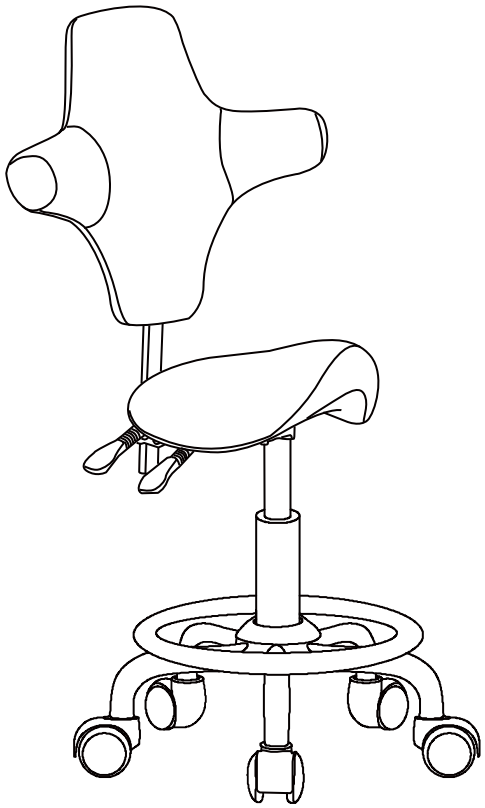

Warm Reminder

If you experience any issues with our product (including missing parts, damage, installation issues, or not meeting expectations), please contact us. We'll ensure satisfactory assistance within 24 hours.

Email: dslimited@163.com

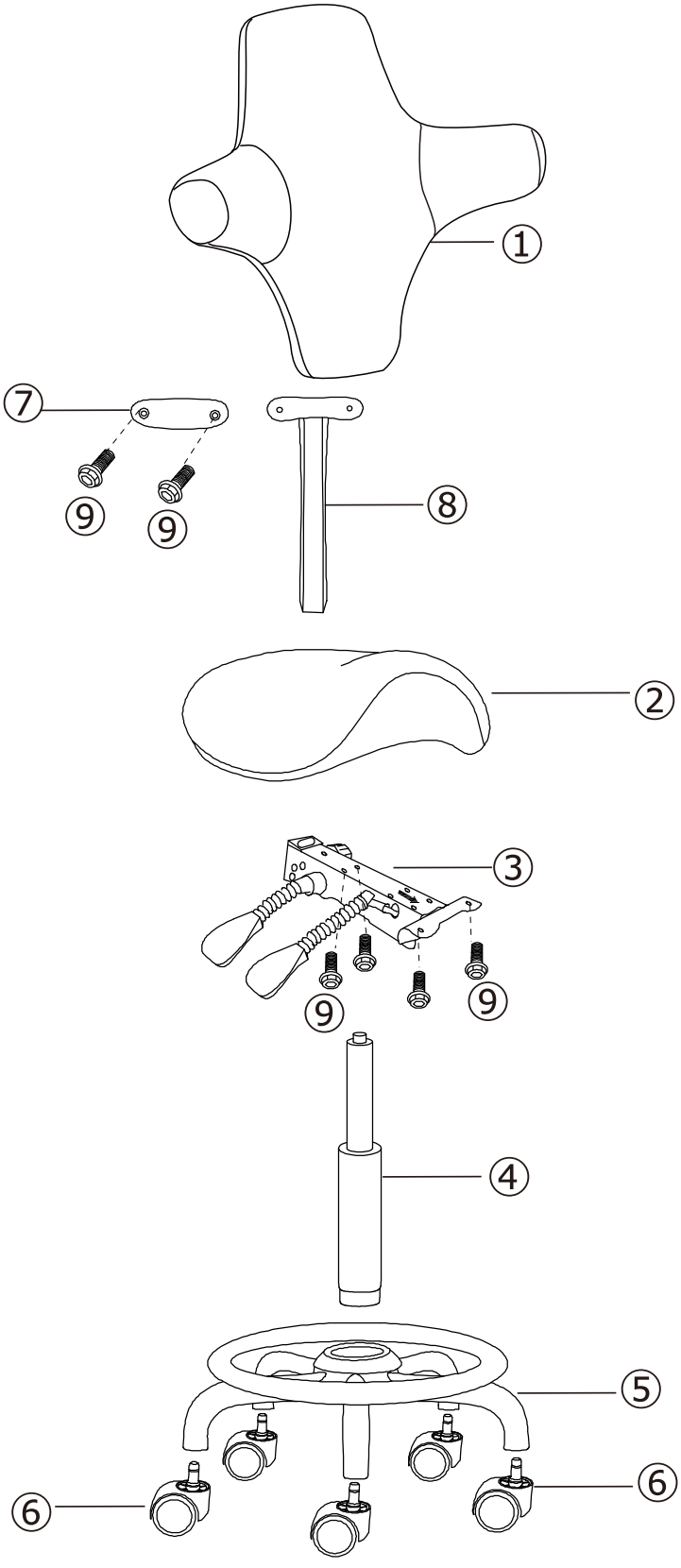
①
⑦
⑨
⑨
⑧
②
③
⑨
⑨
④
⑤
⑥
⑥

Parts

Code	Image	Parts Name	Qty(Pcs)	Code	Image	Parts Name	Qty(Pcs)
1	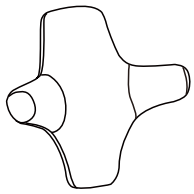	Backrest	1	*2*		Seat	1
3	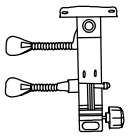	Mechanism	1	*4*		Gaslift	1
5	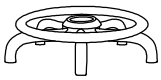	Leg	1	*6*		Caster	1
7		Plastic Cover	1	*8*		Back Connecting Rod	1
9		Hex Screw M6*20	6	***10***		Allen Key	1

Installation Diagram

Step One:

Insert 5pcs of Caster ⑥ into the leg⑤

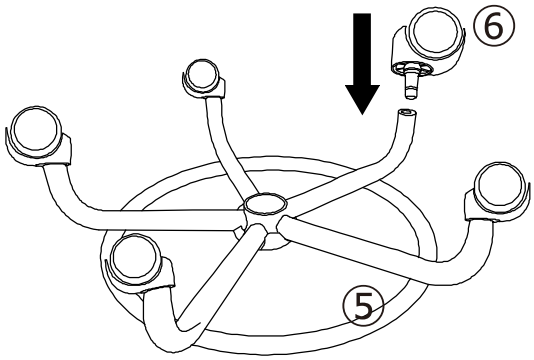

Step Two:

Put gaslift④ into the leg⑤

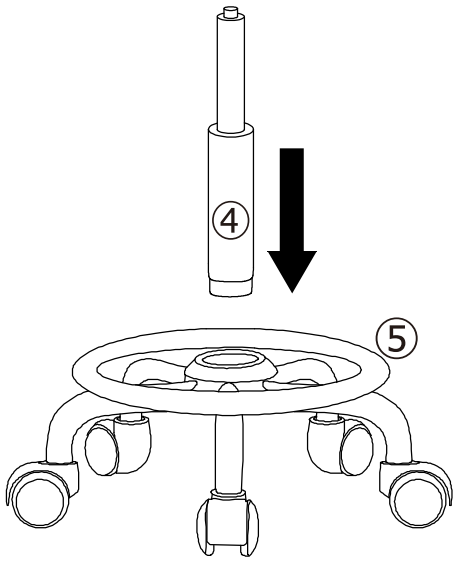

Step Three:

Attach mechanism③ on the seat②
by using 4pcs of screw⑨

⑨ x4

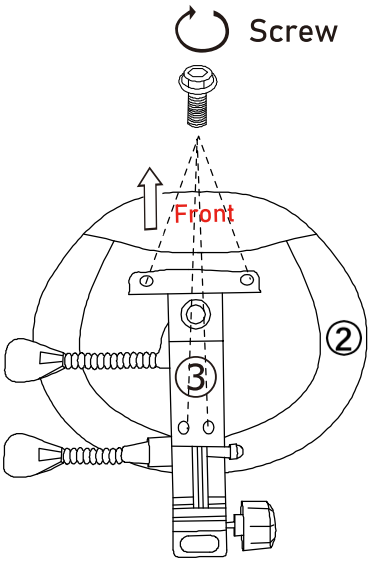

Step Four:

Turn the stool over and place it on the gaslift

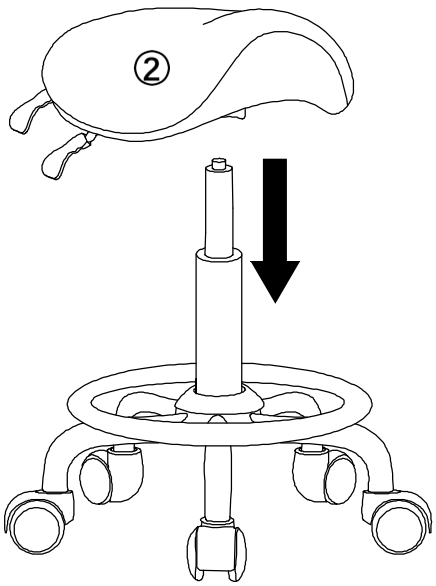

Step Five:

Attach the Back Connecting Rod on the back①
put the plastic cover on the metal
then tighten by screw⑨

⑨ x 2

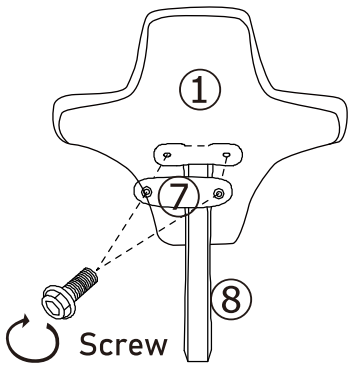

Step Six:

Insert the backrest into the mechanism

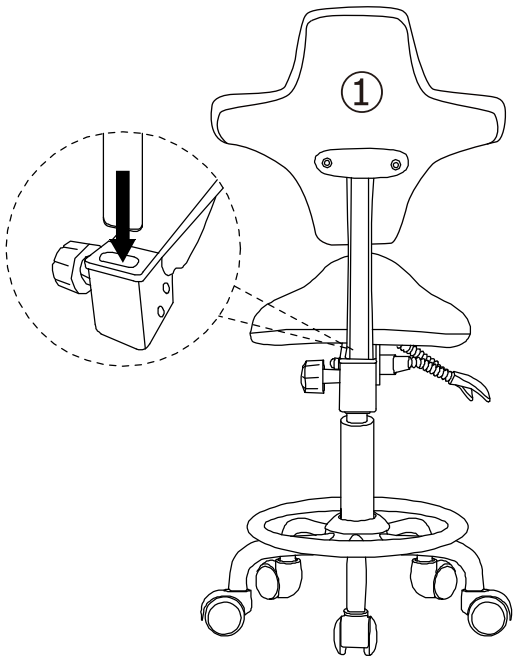

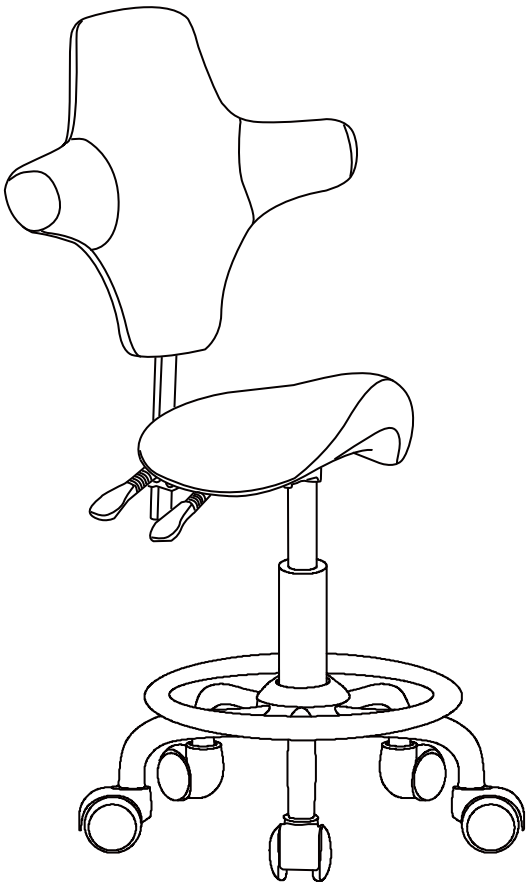

Instruction for use

Push the handle upwards and the chair can be raised or lowered

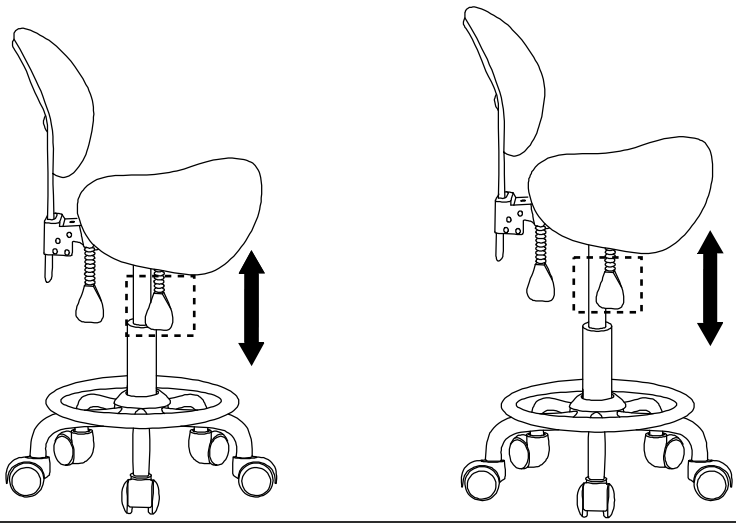

Push the handle upwards to tilt the backrest to any angle.
Push the handle downwards to fix the backrest in the position you need.

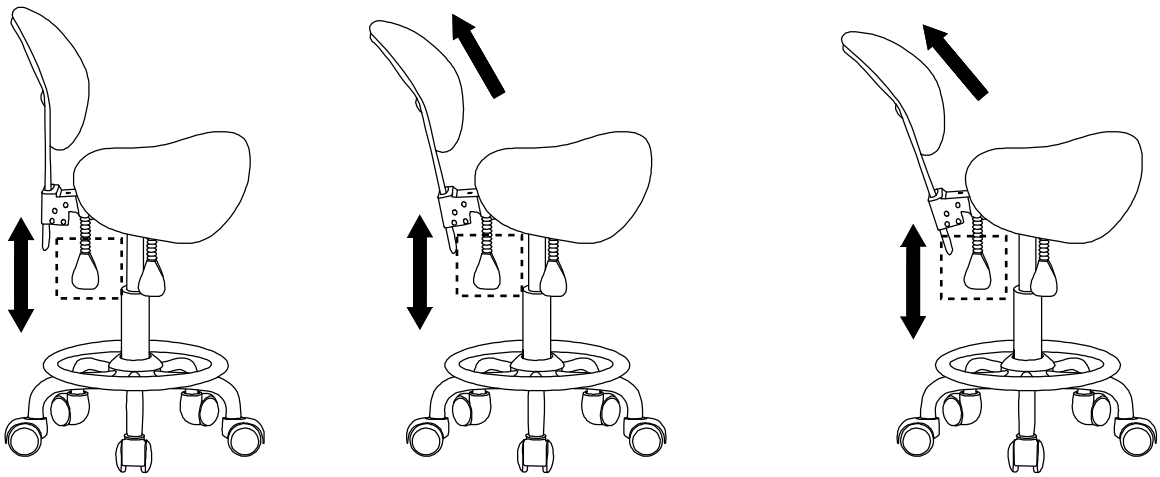

Rotate the knob counterclockwise to adjust the backrest height.
Rotate clockwise to lock the backrest at the height you need.

