Upholstered Platform Bed

INSTRUCTION MANUAL

Safety Information

DANGER

- Keep small parts away from children during assembly.
- Read and follow instructions carefully.

WARNING

- TO GUARANTEE THE SAFE USE OF THIS PRODUCT, FOLLOW THE WARNINGS, GUIDELINES AND RECOMMENDATIONS IN THIS MANUAL.
- Adult assembly required.
- Small parts may present choking hazard prior to assembly.

CAUTION

- Do not use power tools to assemble your furniture. Power tools may strip or damage parts/product.
- Do not overtighten connectors (screws, bolts, etc.). Overtightening can lead to product damage.
- Be sure to check all packing materials carefully for small parts that may have come loose inside the carton during shipment. If parts are missing, contact THE HOME DEPOT to obtain any missing parts.
- DO NOT USE SUBSTITUTE PARTS.
- This product should only be used on a flat, level surface.
- Read these instructions carefully and retain them for future use. If this product is passed to a third party, then these instructions must be included.
- Assembly requires two people; assembly alone may cause injury.
- Before using the product be sure that it is completely and properly assembled.
- During assembly children should be kept away from the product to avoid possible risk of injury.
- Regularly check screws to ensure they are tightened securely .

Pre-assembly

PLANNING ASSEMBLY

- Remove all Packaging materials , staples and packing straps from the carton .
- Refer to Parts List and Hardware List , and ensure parts and hardware are correct before assembly .
- Contact customer service for missing parts .
- Place all wooden parts on a clean , flat , and soft surface (e.g.carpet or rug) to prevent scratch and damage to parts .

TOOLS REQUIRED

Safety goggles

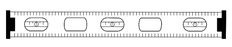

Level

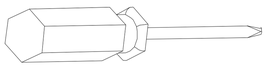

Cross Screwdriver

A 1pc

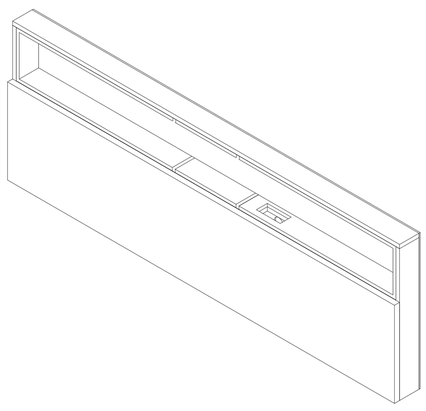

A1 2pcs

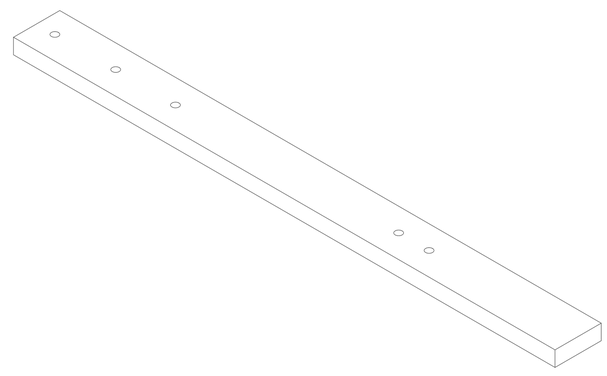

A2 2pcs

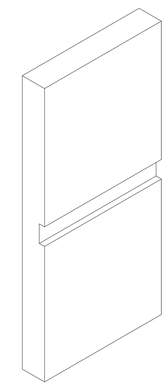

A3 1pc

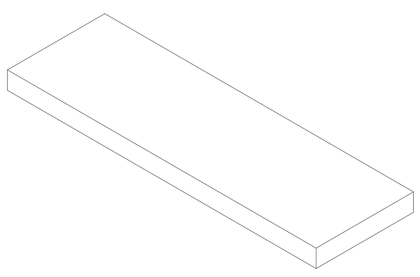

B 1pc

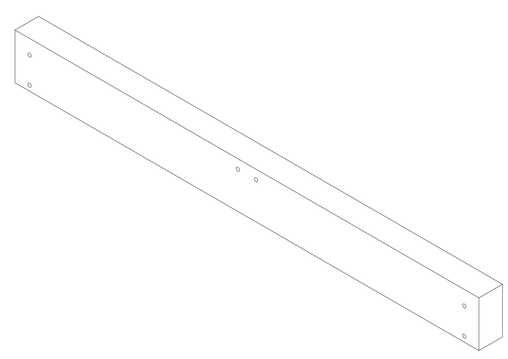

C 2pcs

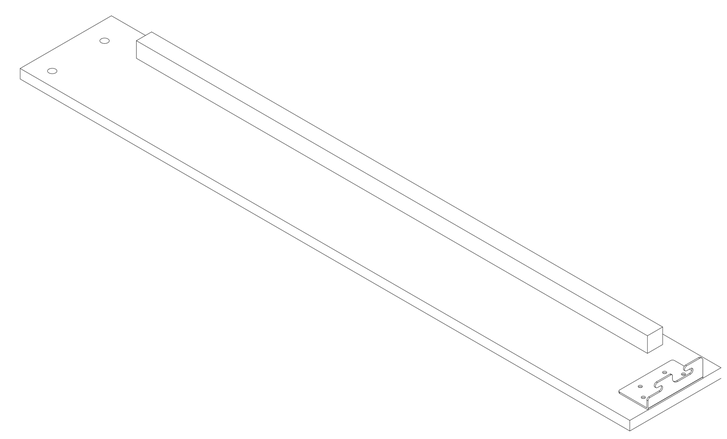

D 2pcs

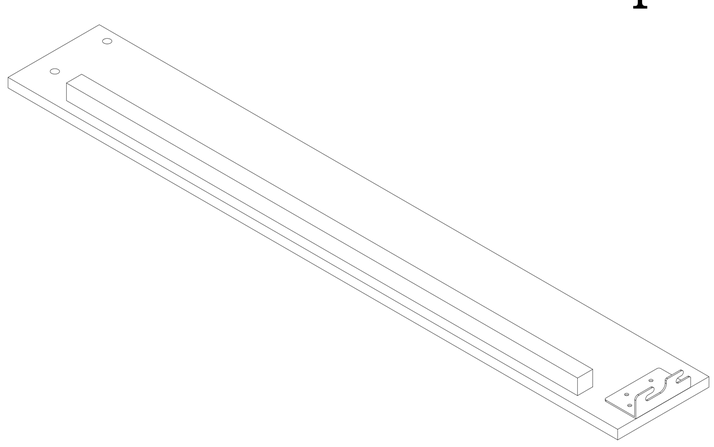

E 2pcs

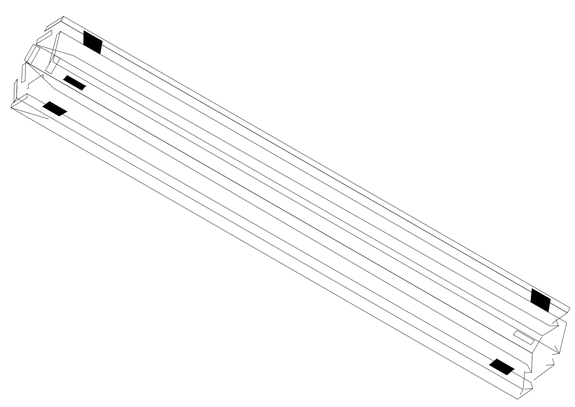

F 1pc

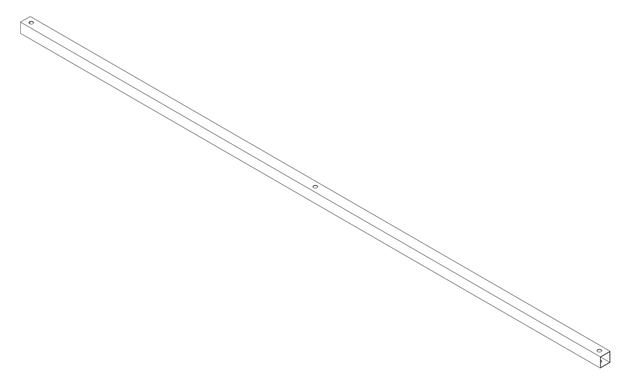

F1 2pcs

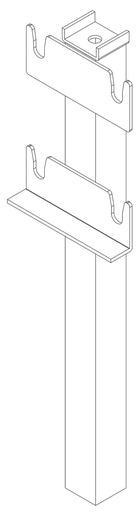

G 1pc

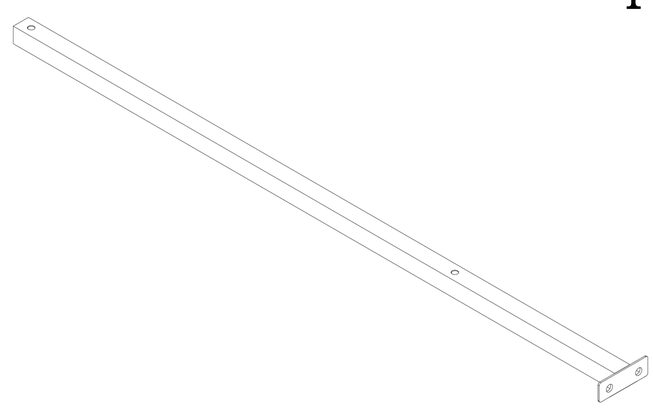

G1 1pc

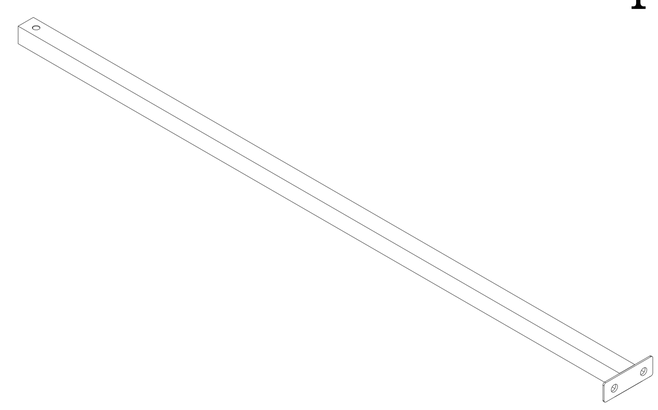

H 2pcs

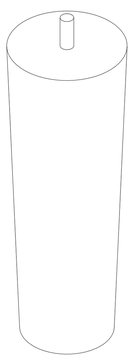

I 1pc

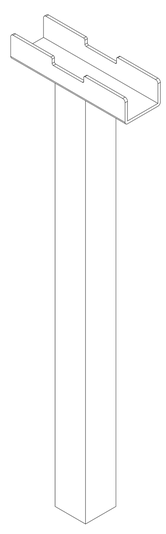

J 1pc

N 1x

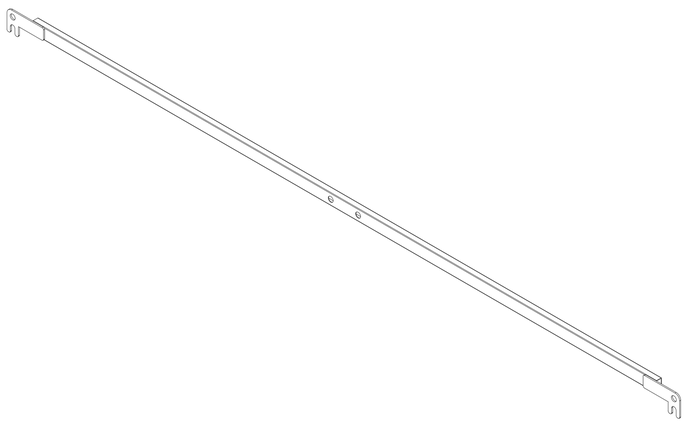

1 8pcs

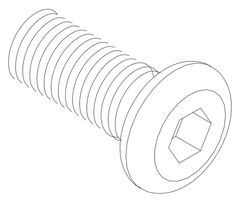

M8*18

2 2pcs

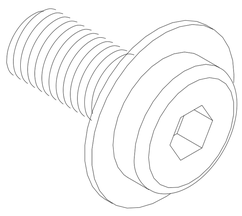

M8*18

3 12pcs

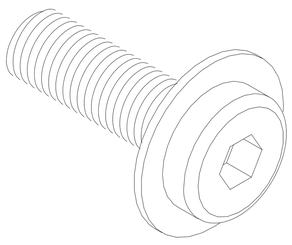

M8*25

4 4pcs

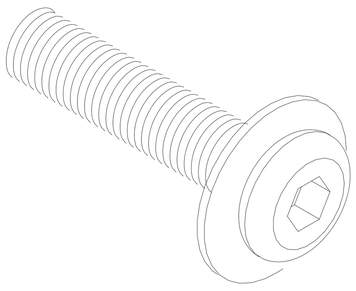

M8*35

5 4pcs

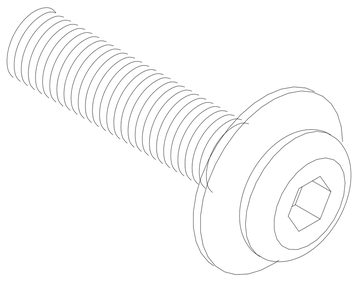

M8*40

6 2pcs

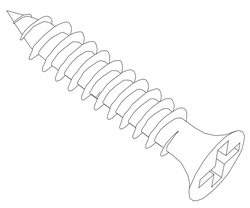

Ø4*16

7 1pc

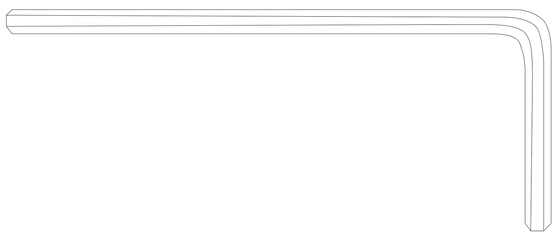

8 1pc

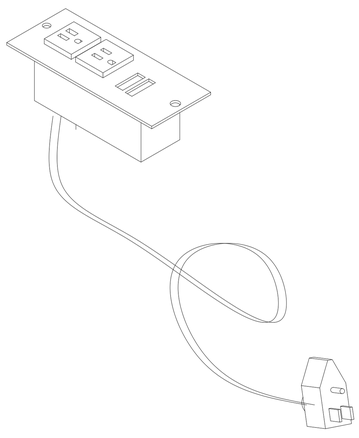

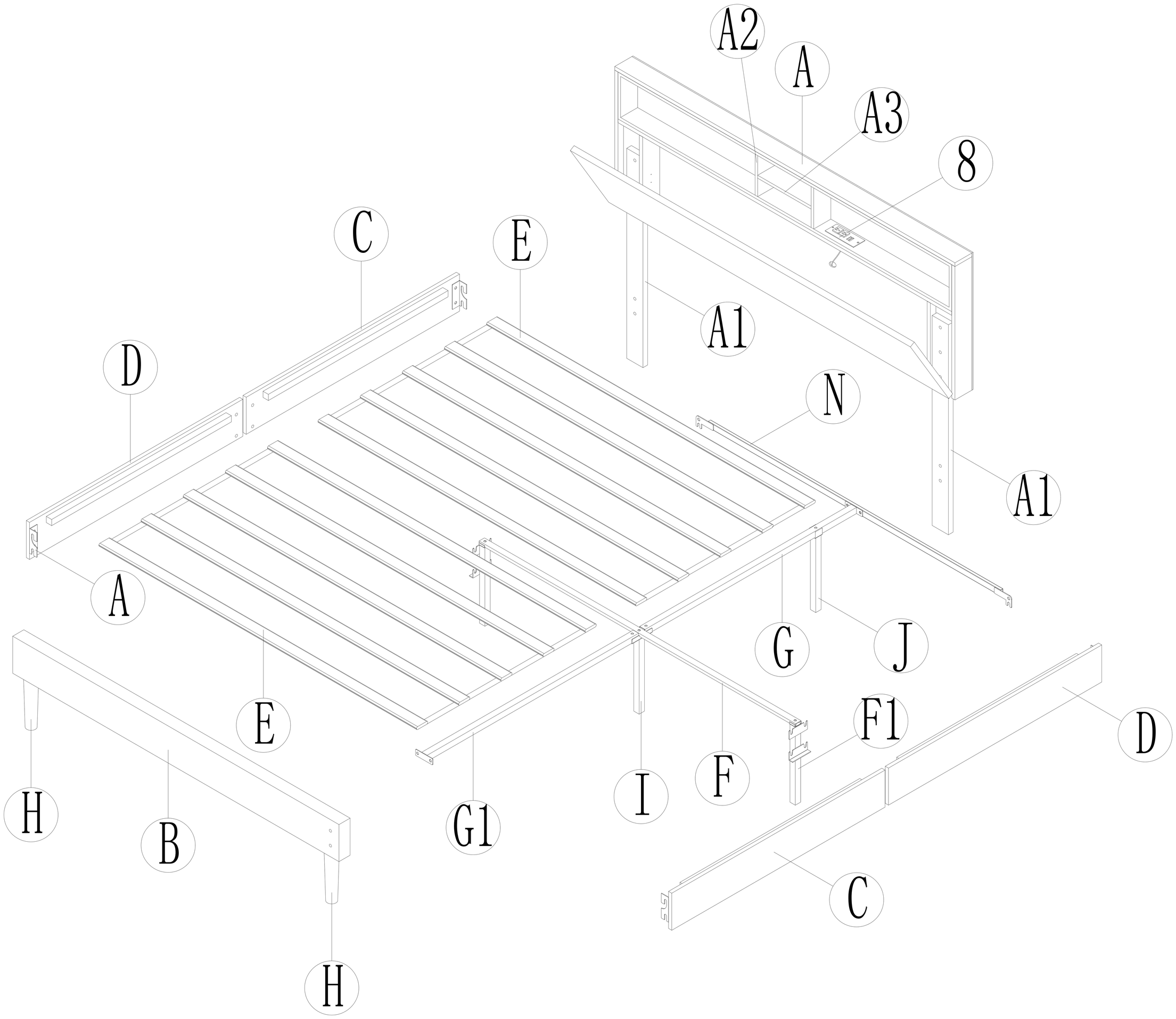

1

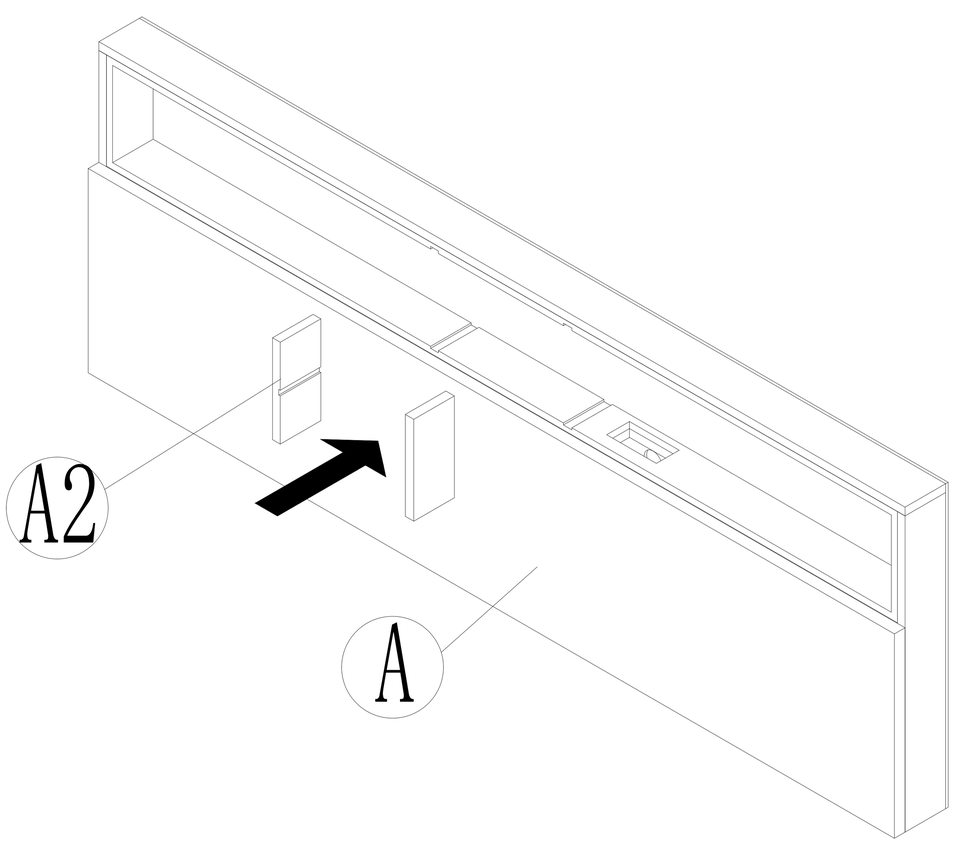

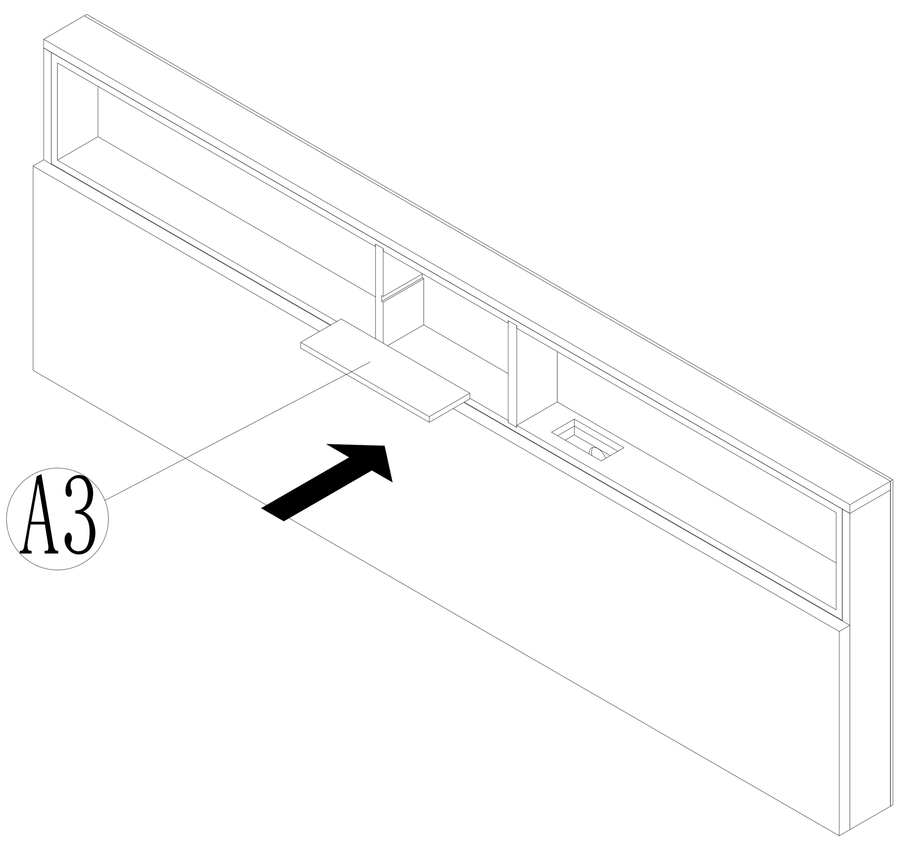

2

NOTE: Please do not tighten all screws until the entire assembly completed!

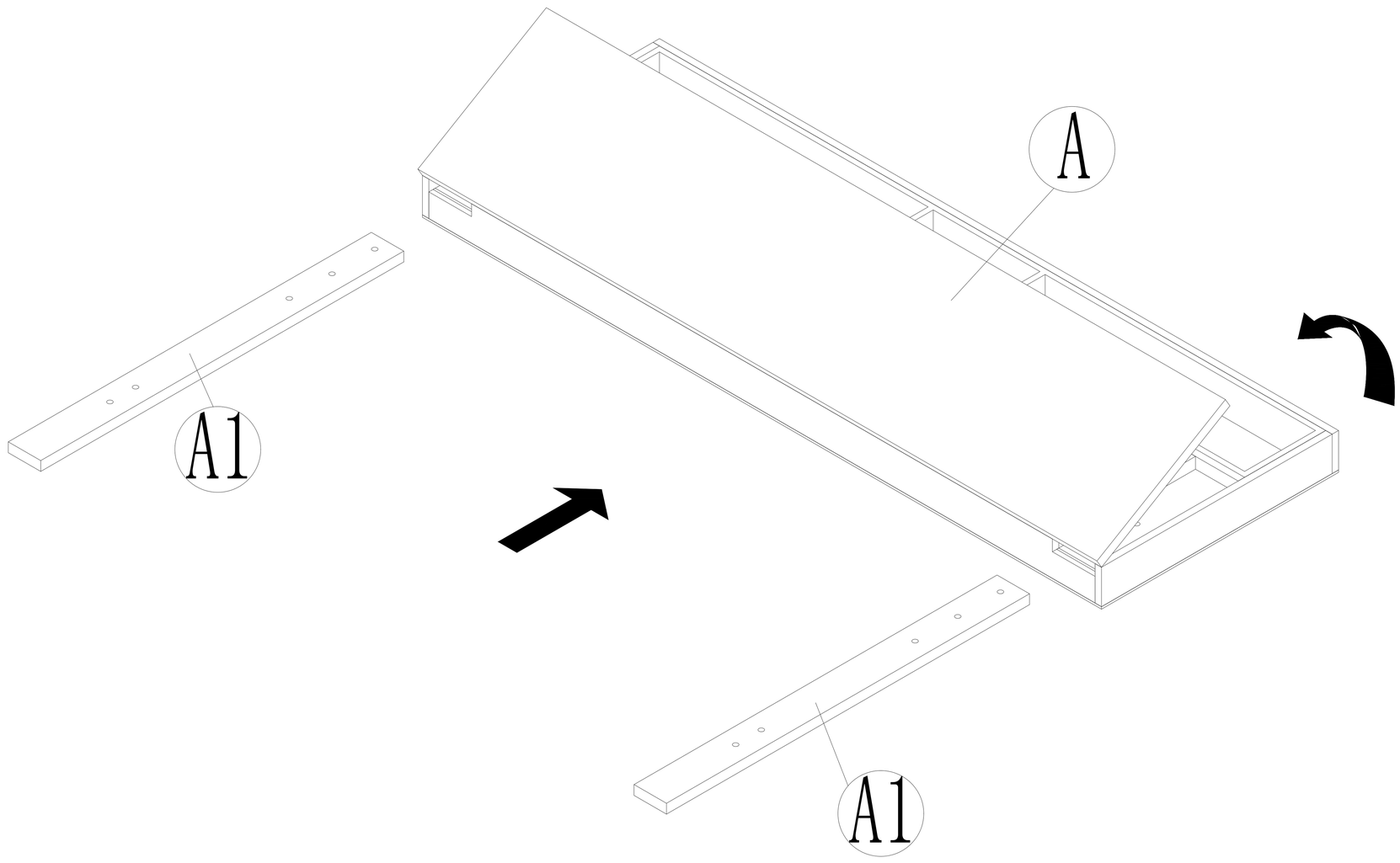

The headboard(A) can be adjusted up and down by fixing the position with NO.5 screws.

3

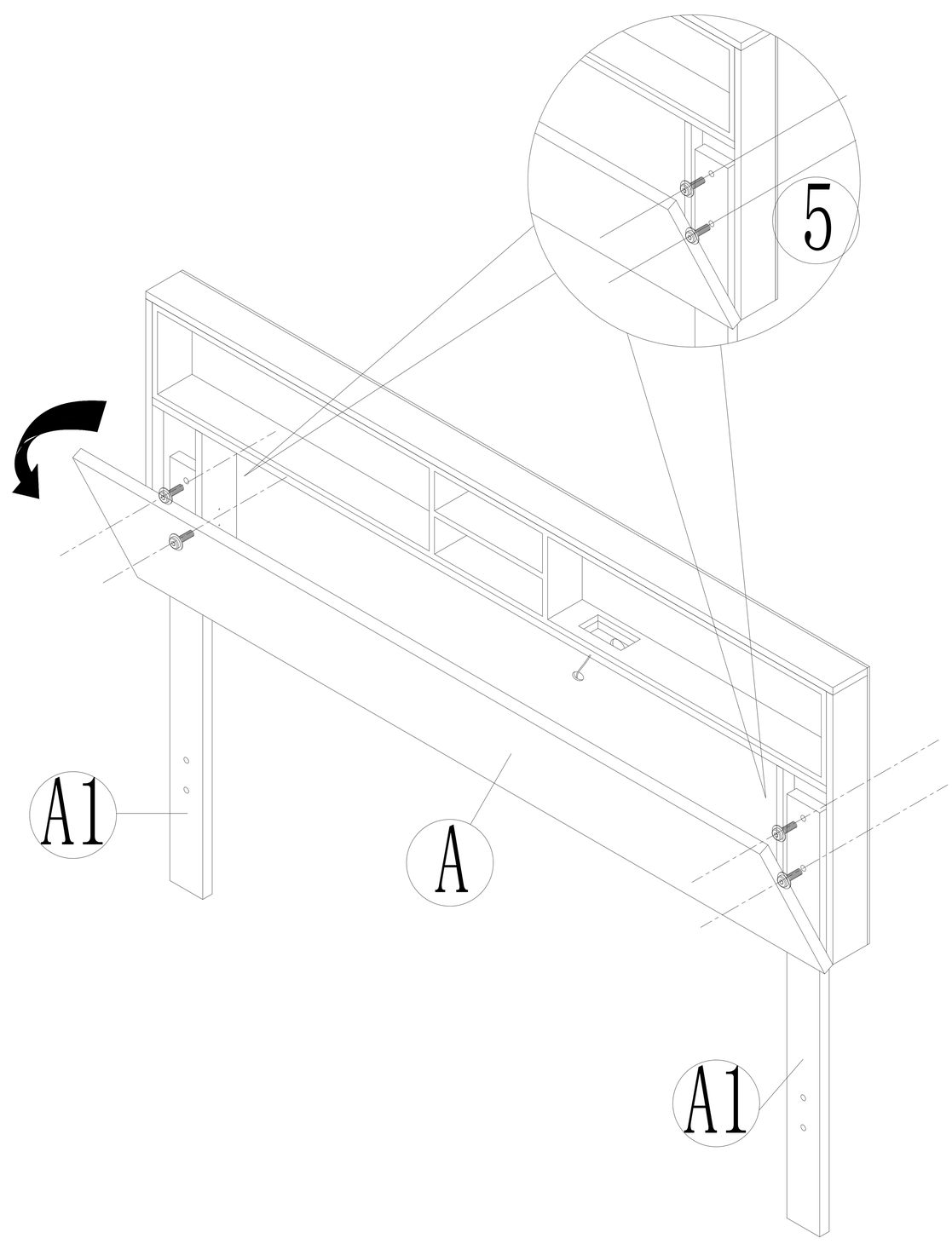

4

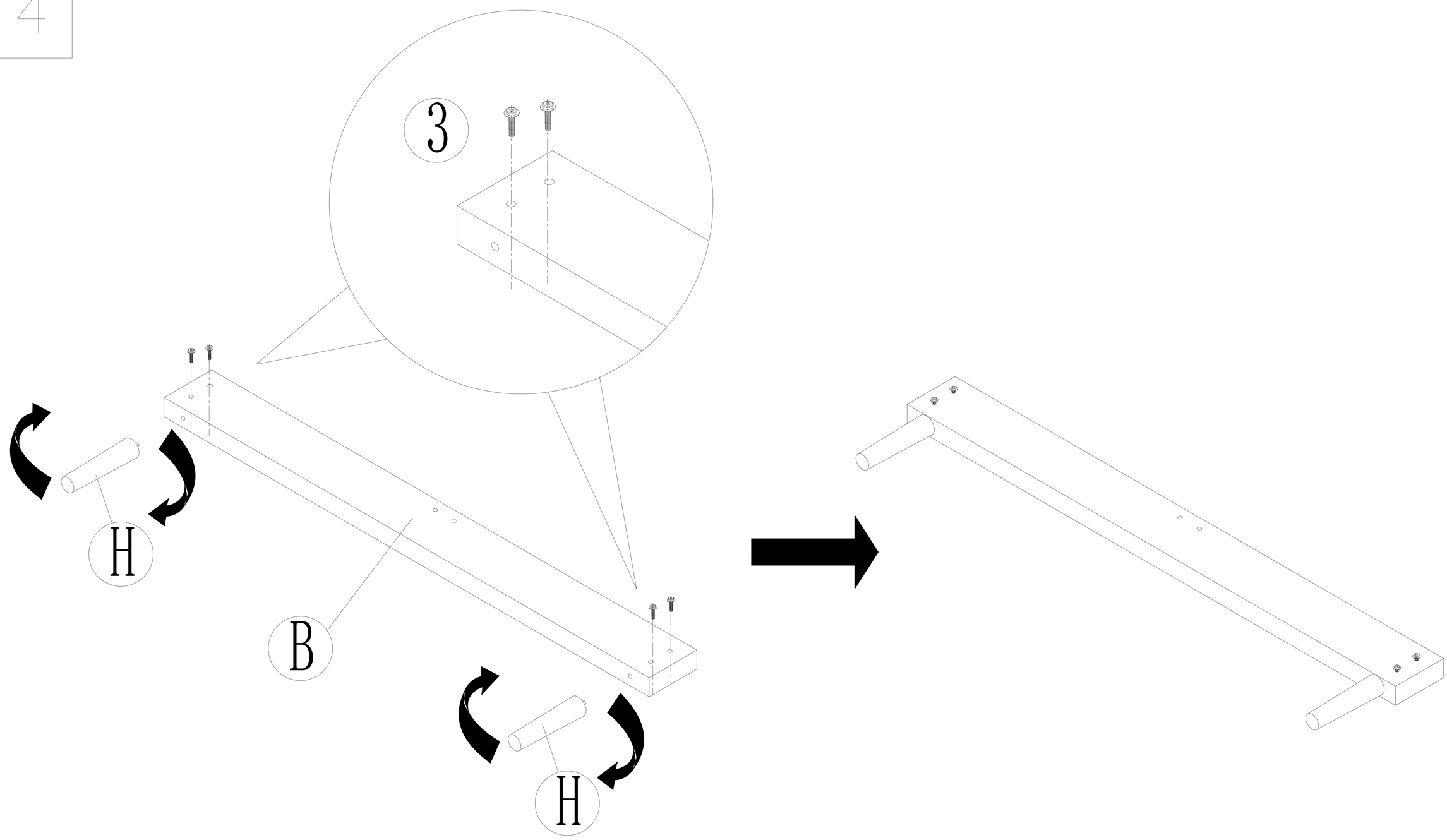

5

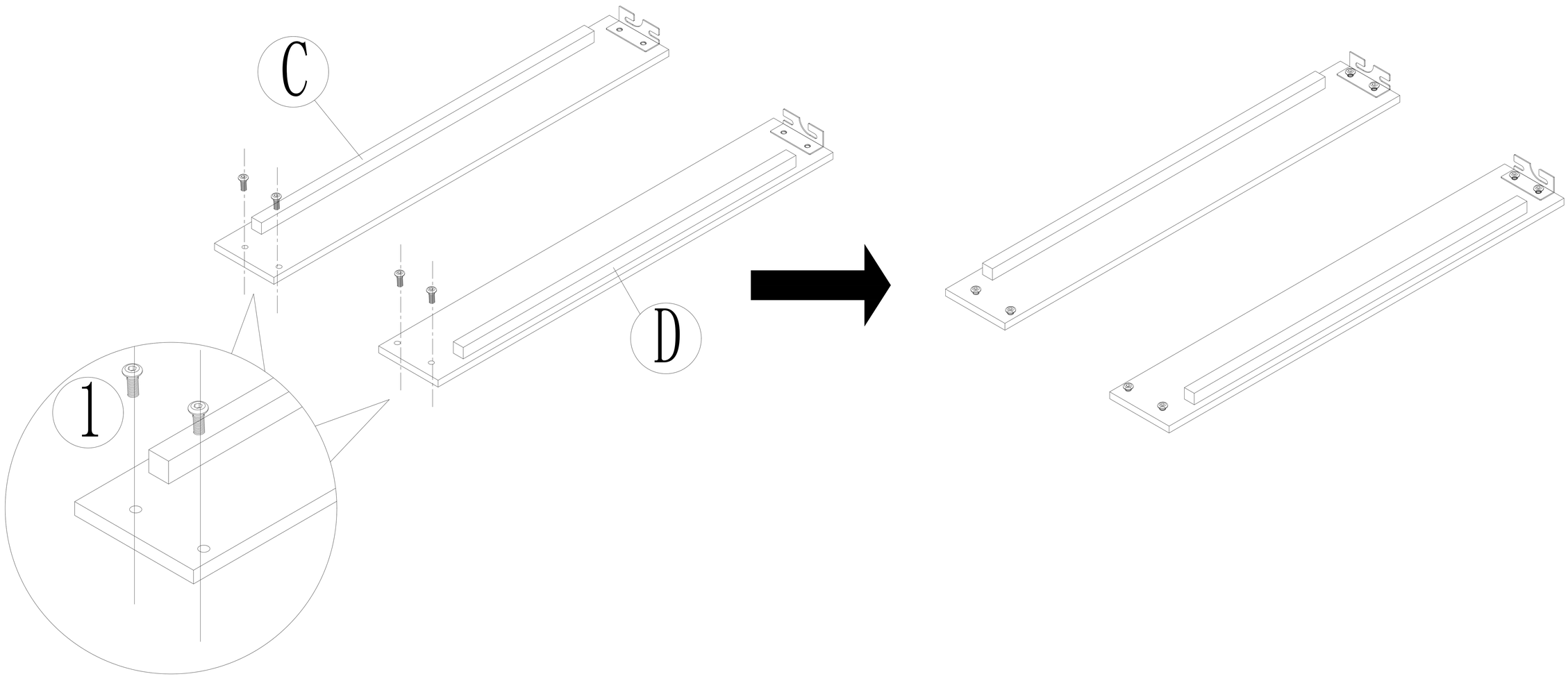

6

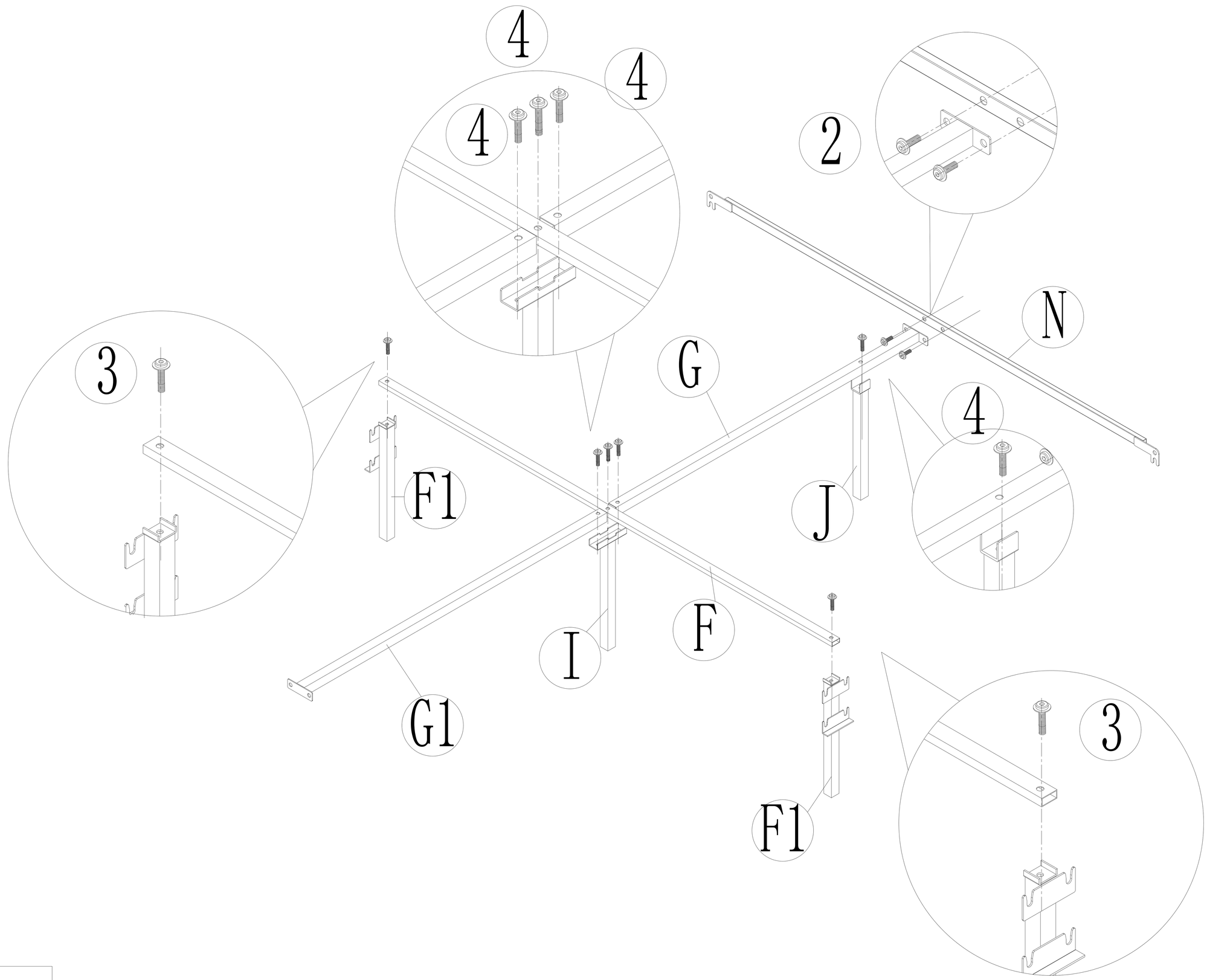

7

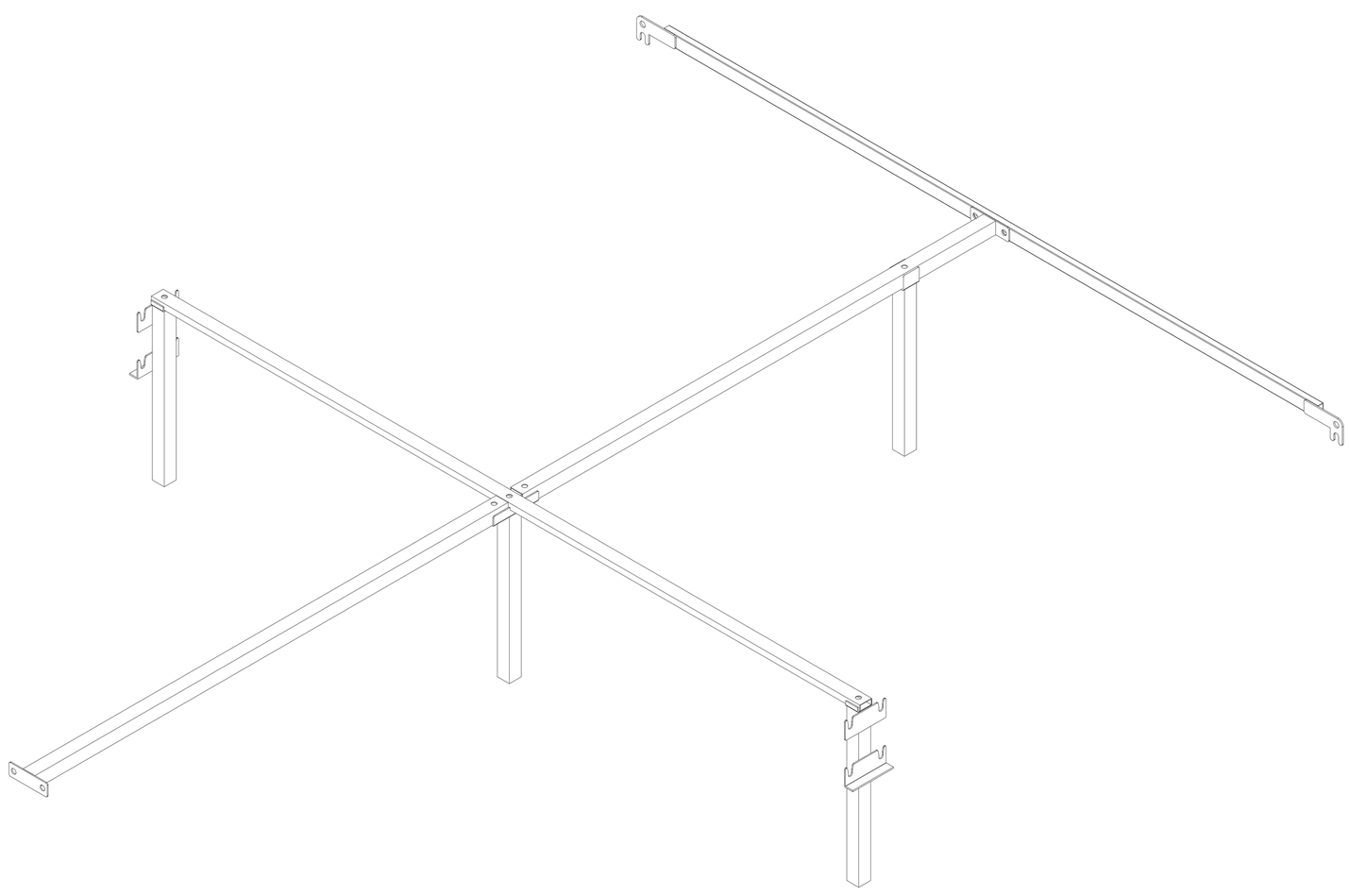

8

NOTE: Please do not tighten screws in this step.

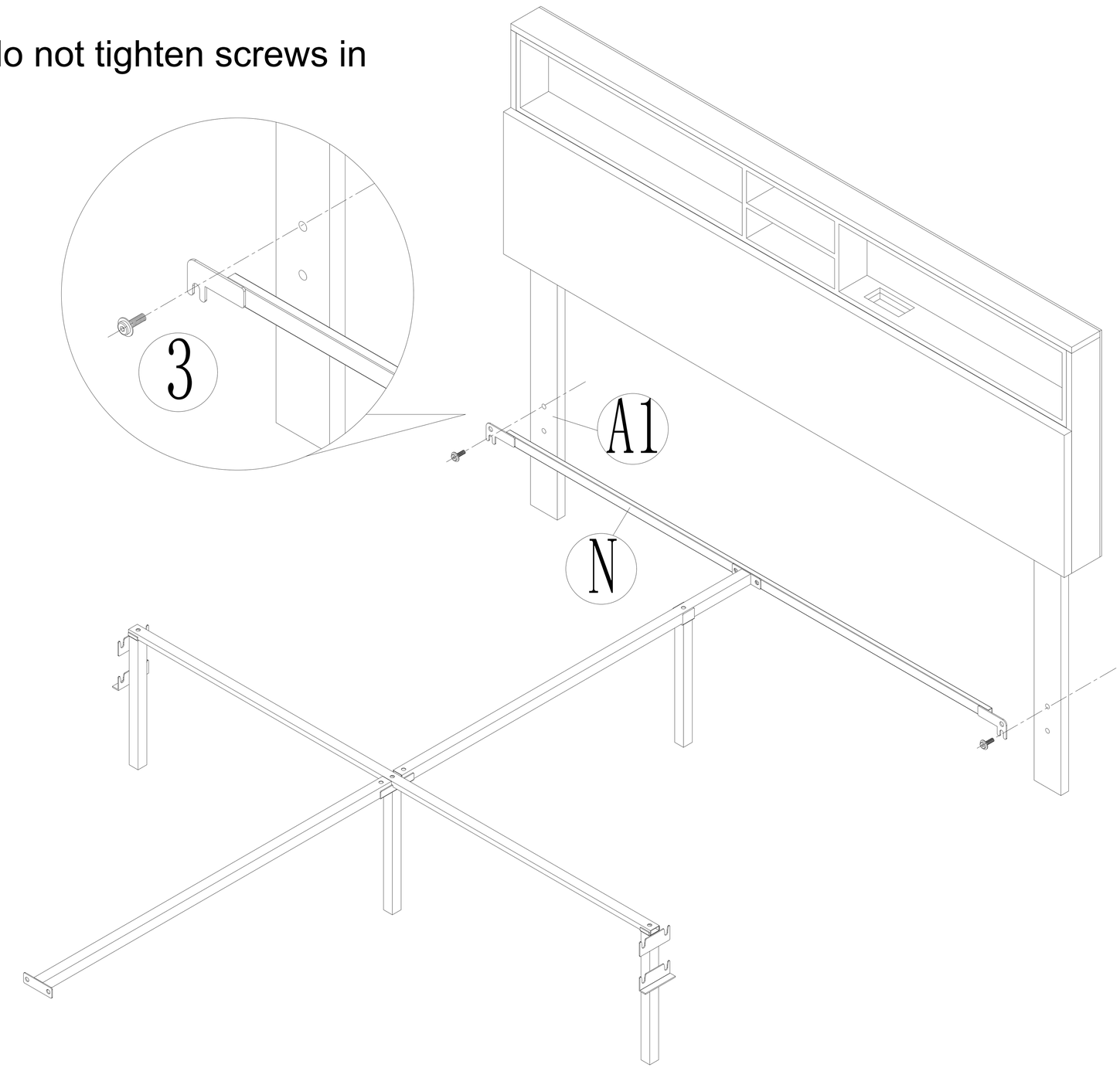

9

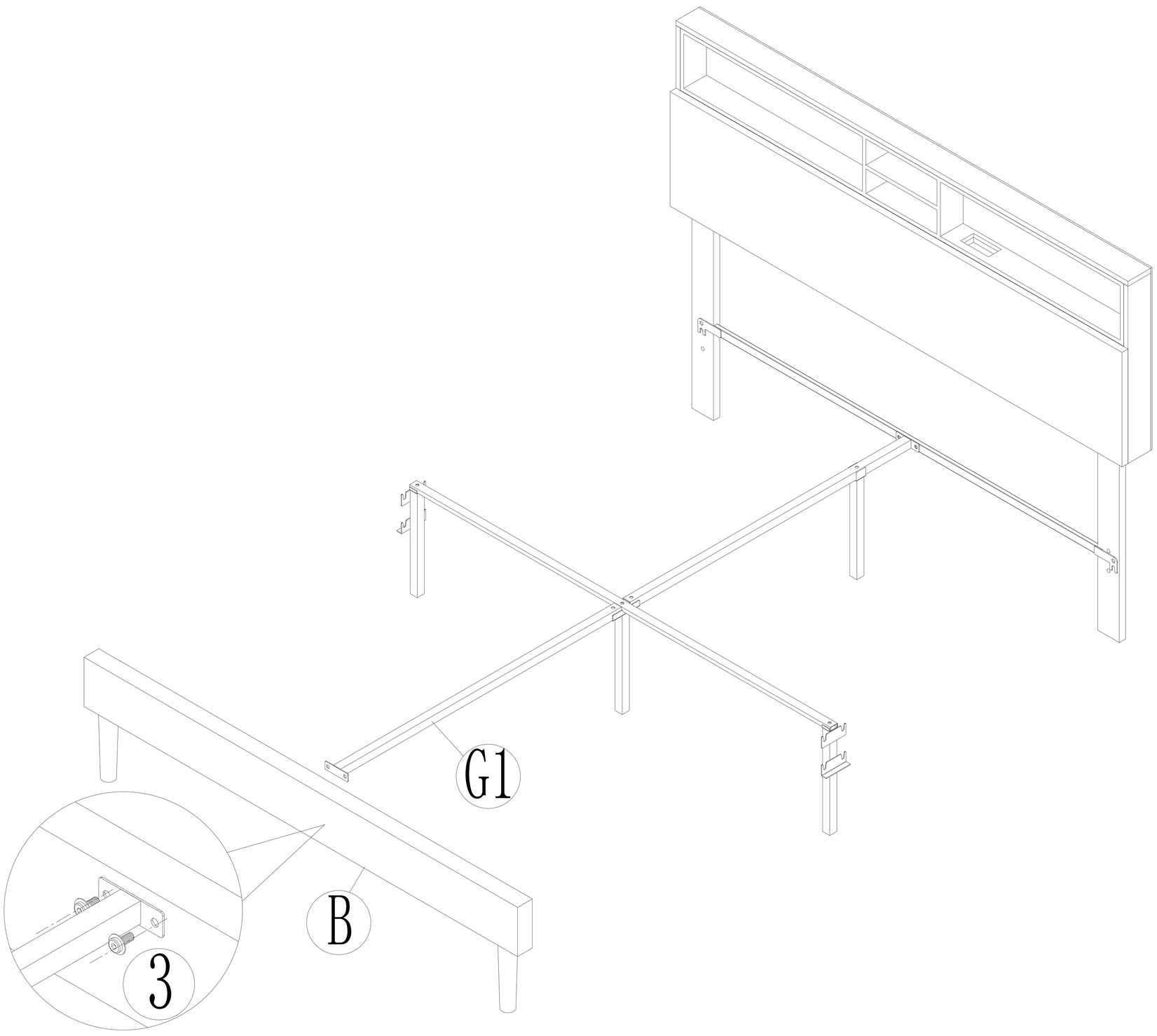

10

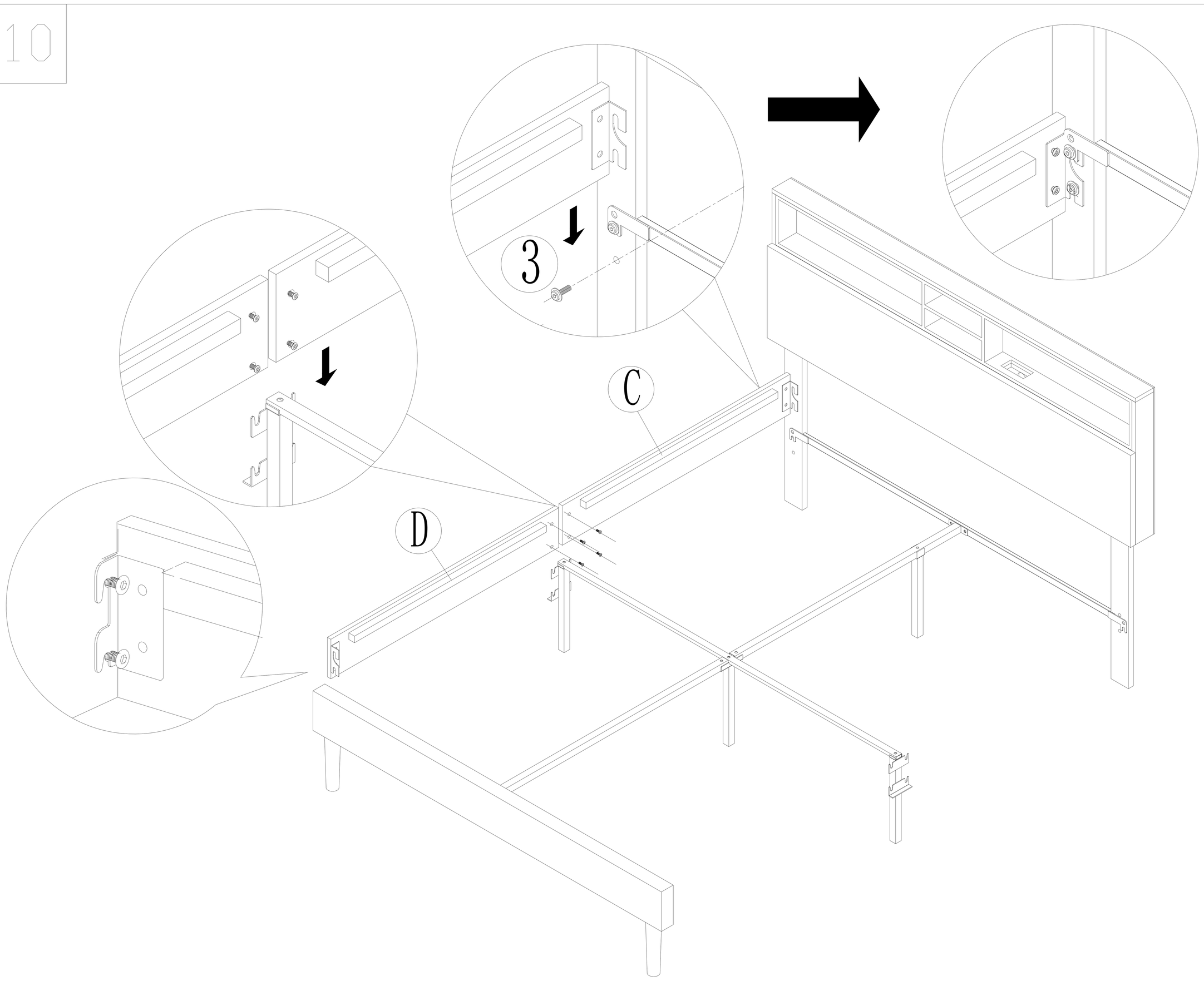

11

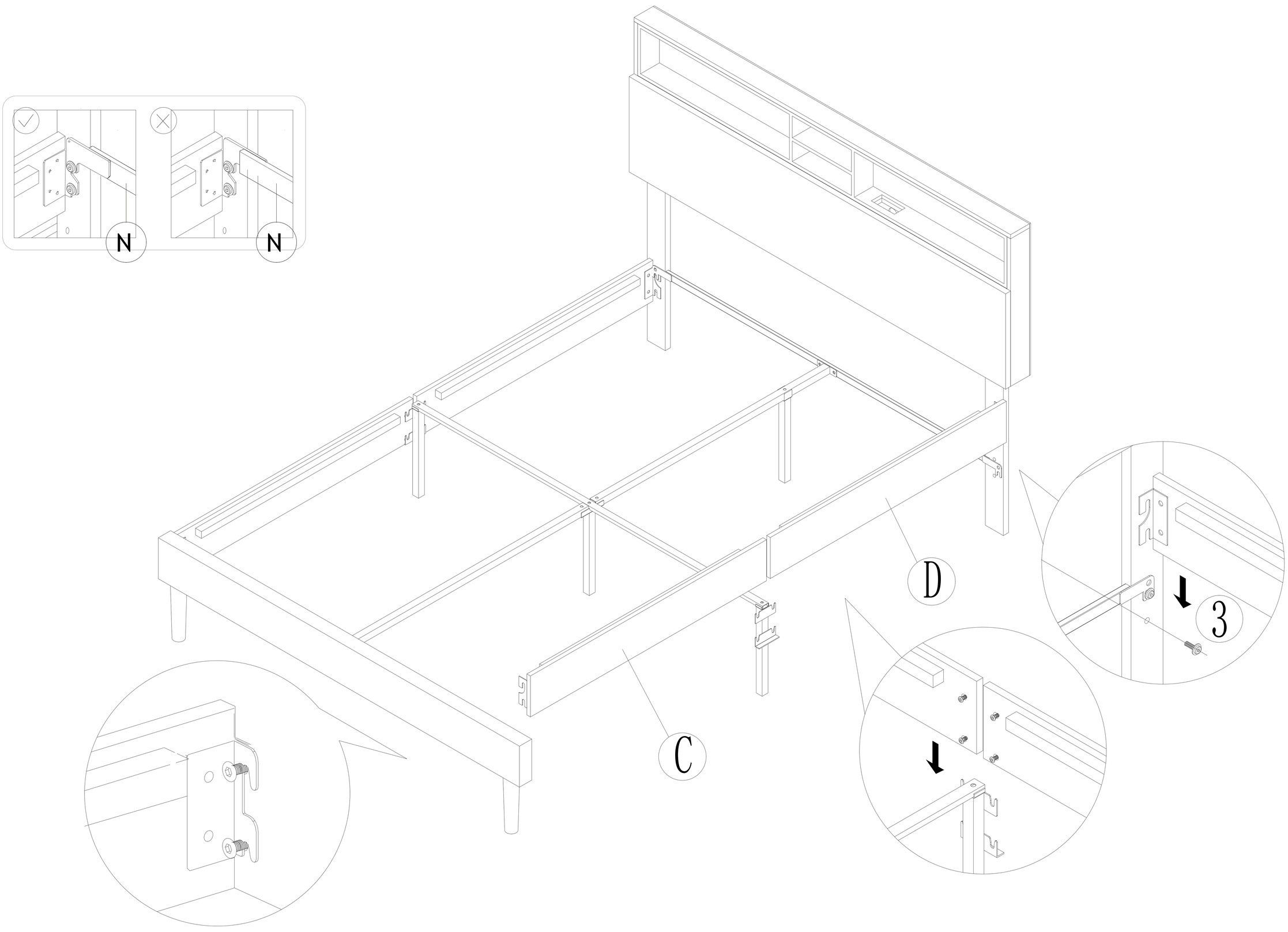

12

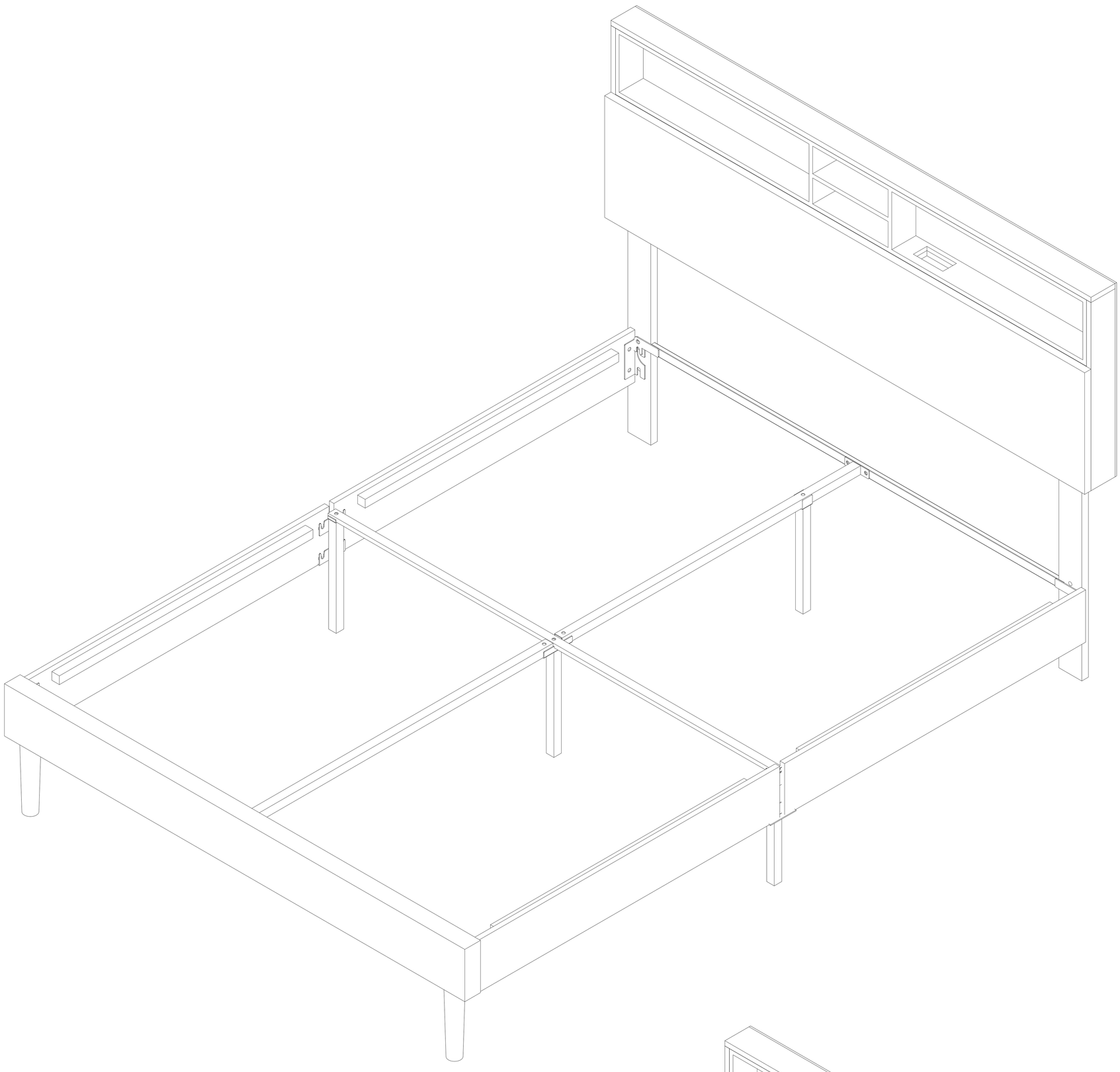

13

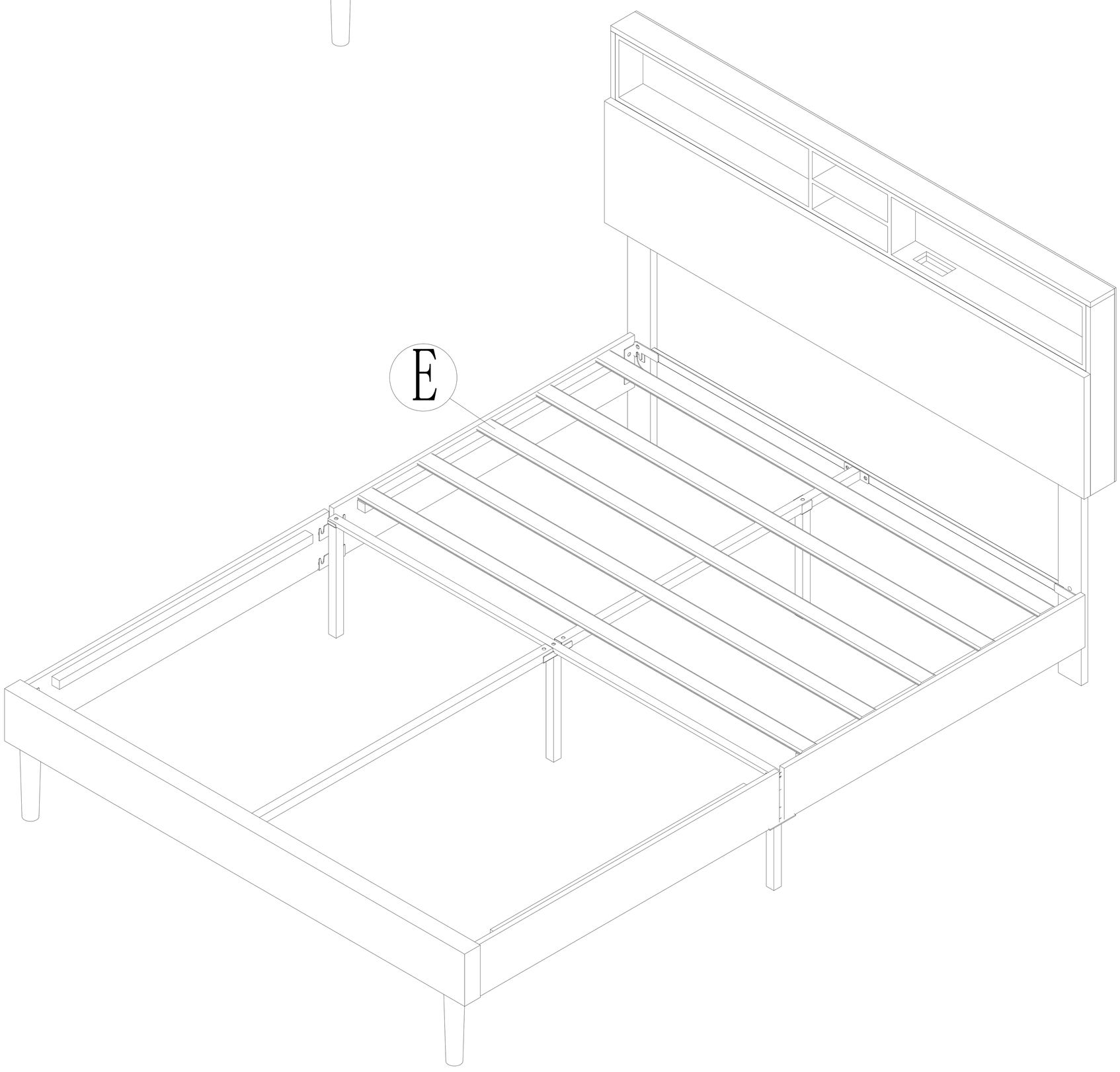

14

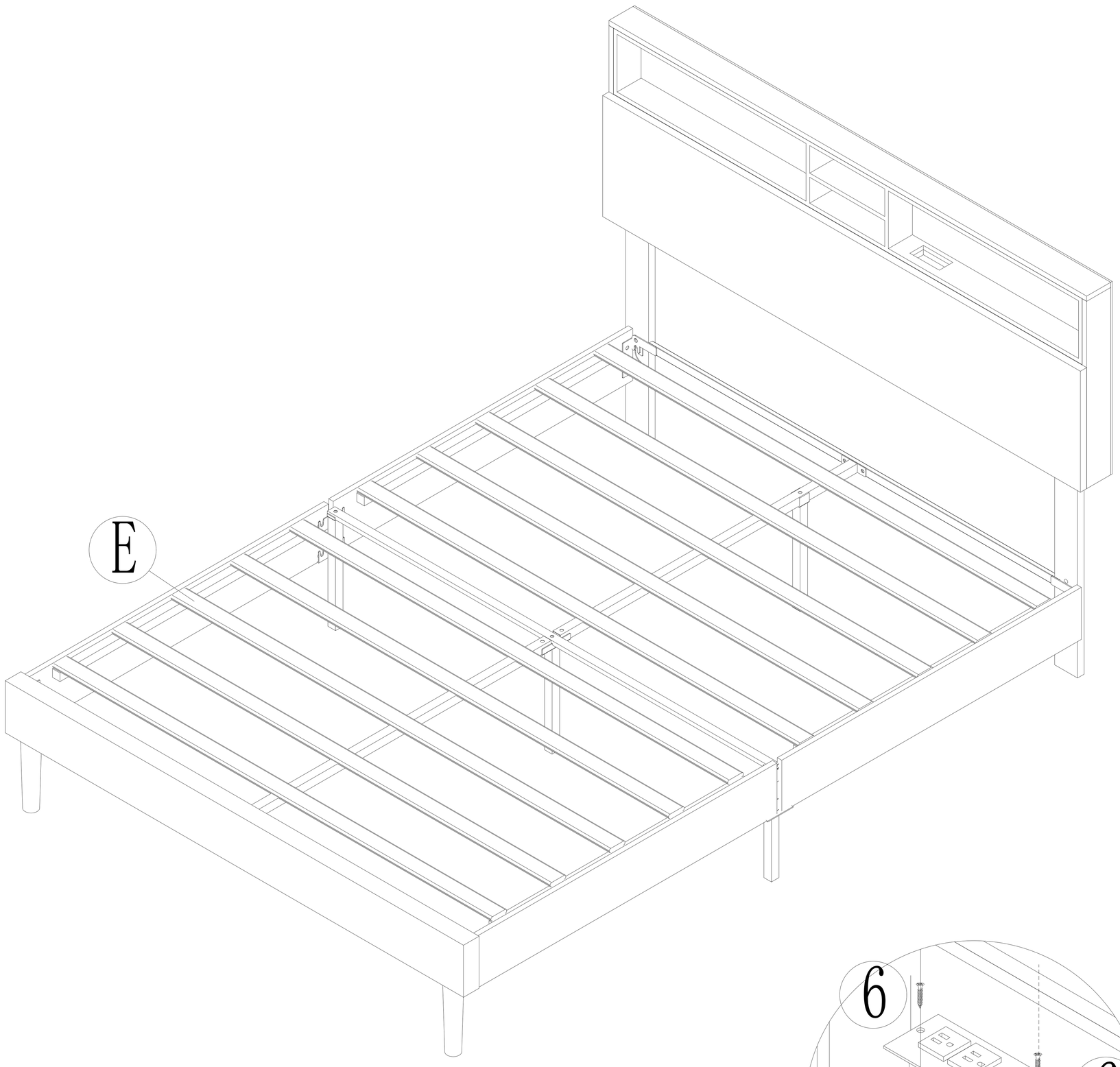

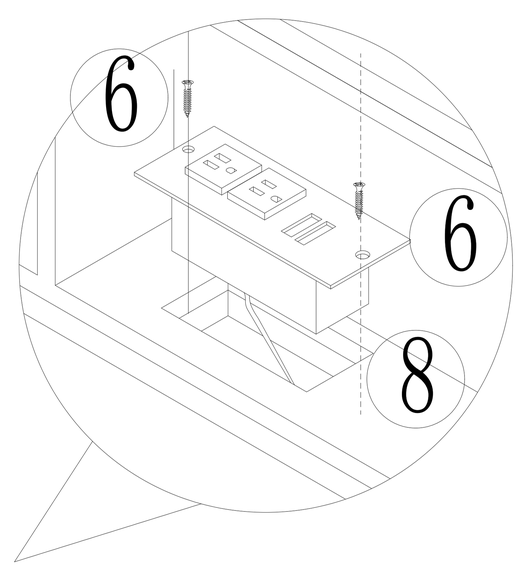

15

16

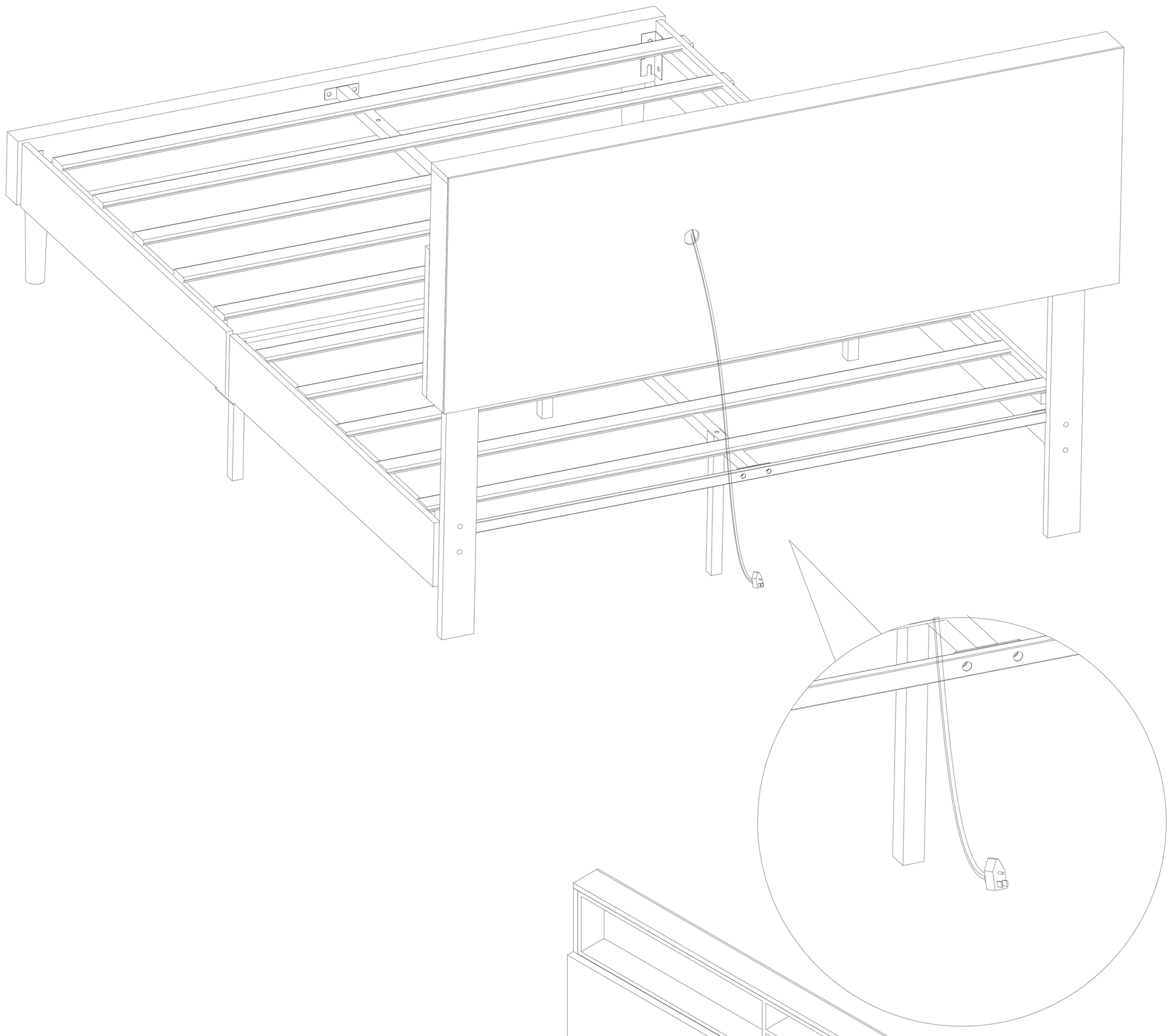
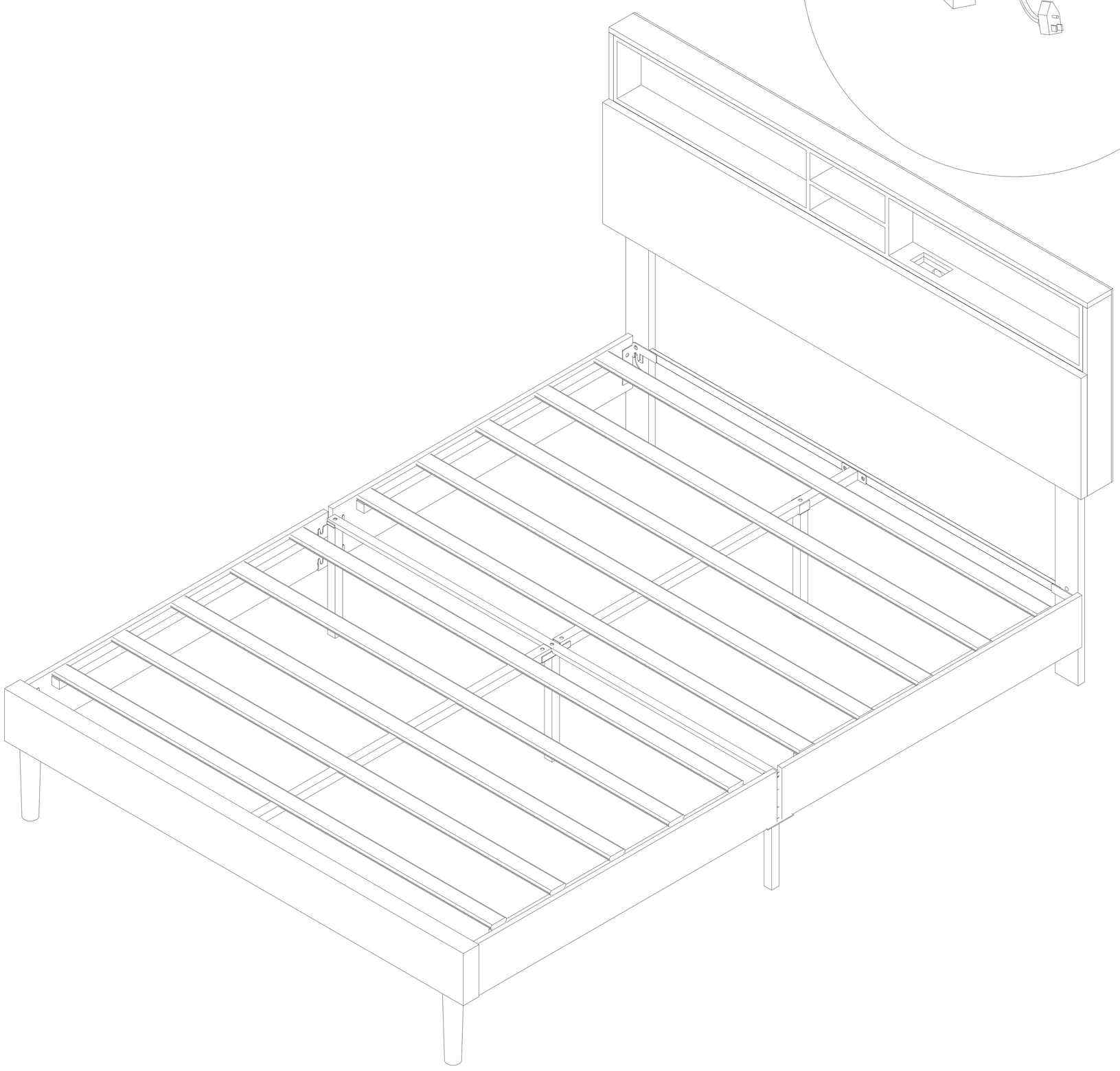
17