

ASSEMBLY INSTRUCTION

PART LIST

A x 2 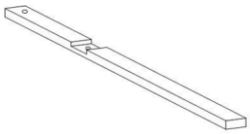	E x 2 	②x12  6*55mm
B x 2 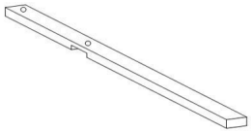	F x 1 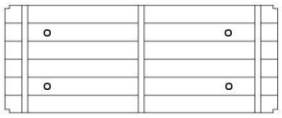	③x 4  6*50mm
C x 2 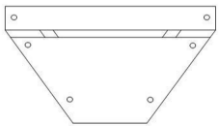	G x 1 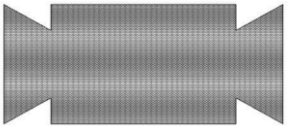	④x 6  3*12mm
D x 2 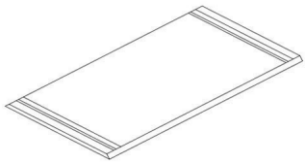	①x 2  6*75mm	⑤x 6  3.5*25m

STEP1

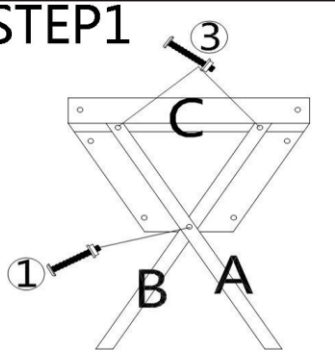

x 2

STEP2

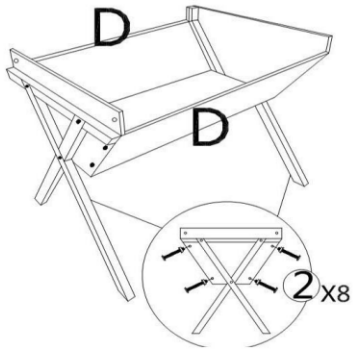

STEP3

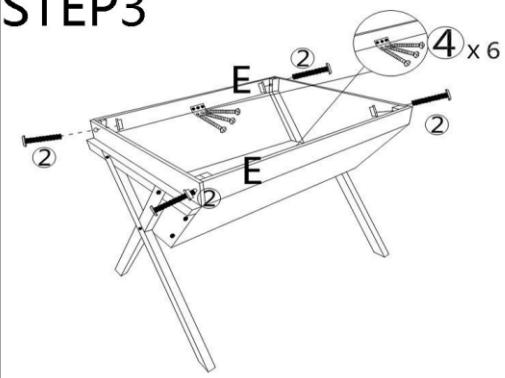

STEP4



STEP5

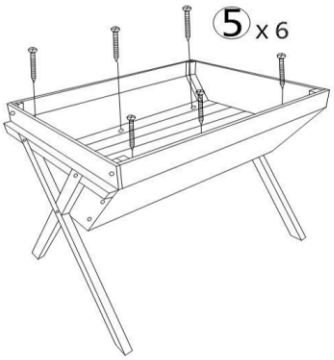

STEP6

