INSTRUCTION MANUAL

TWO SEAT CHAIR

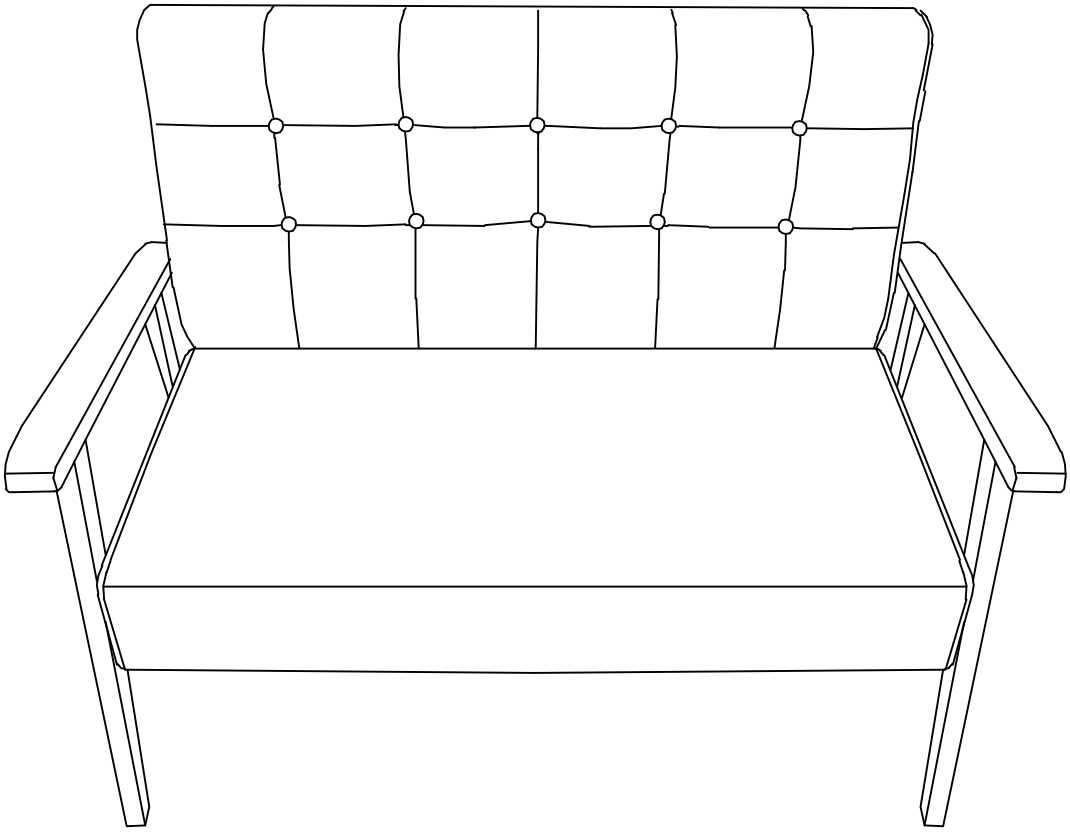

Hardware List

Pls make sure all the accessories are complete!

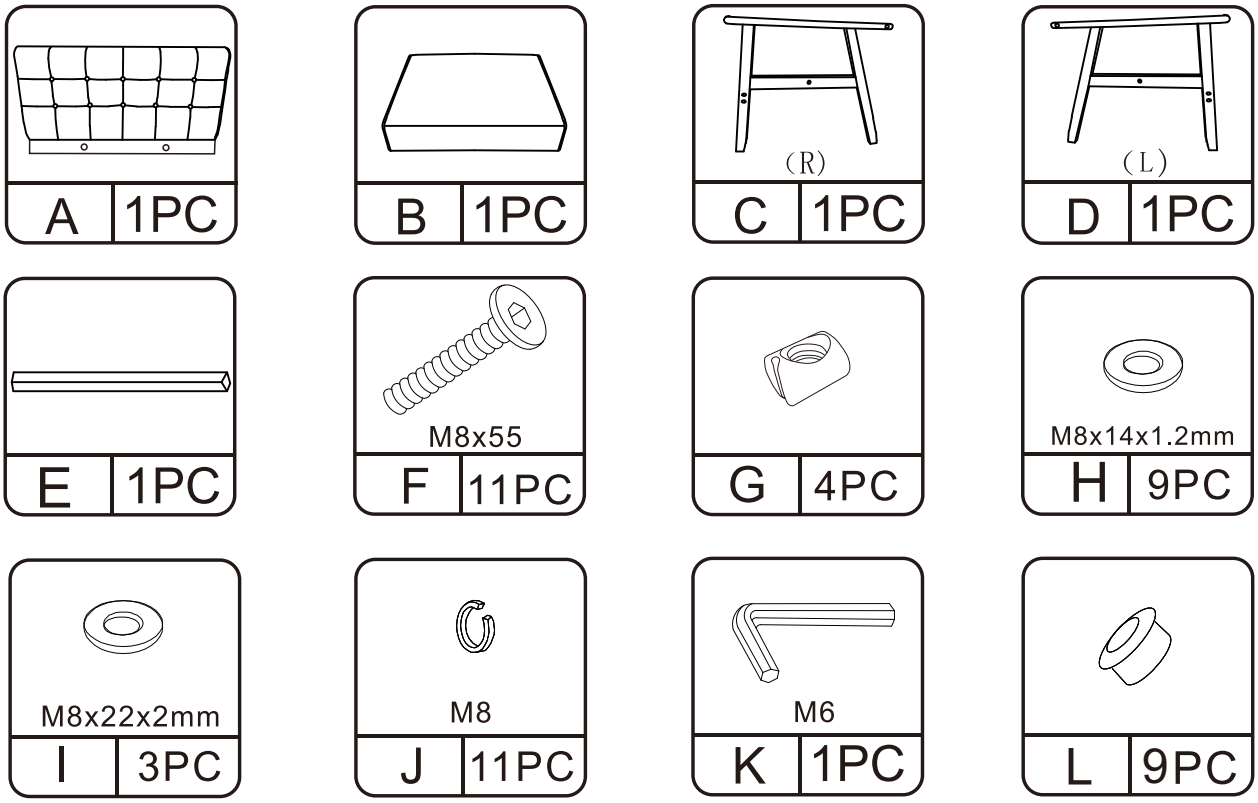

1

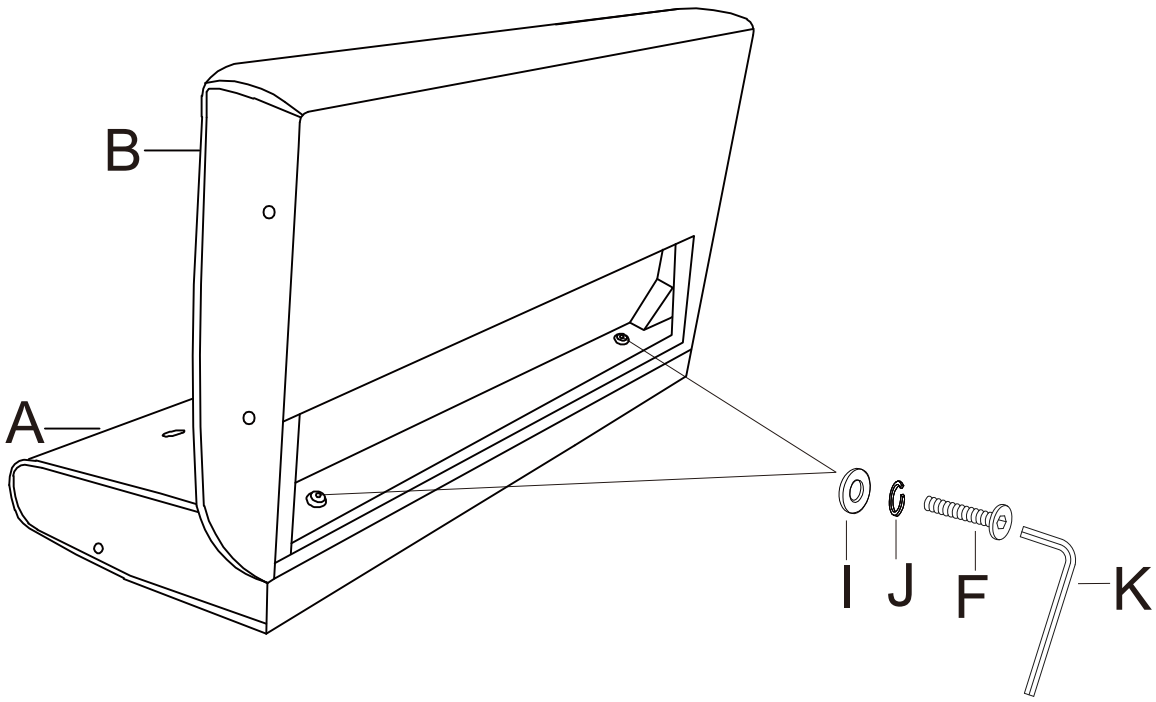

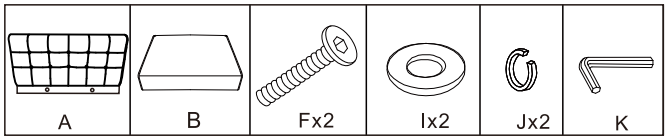

Remark:Accessories inside

2

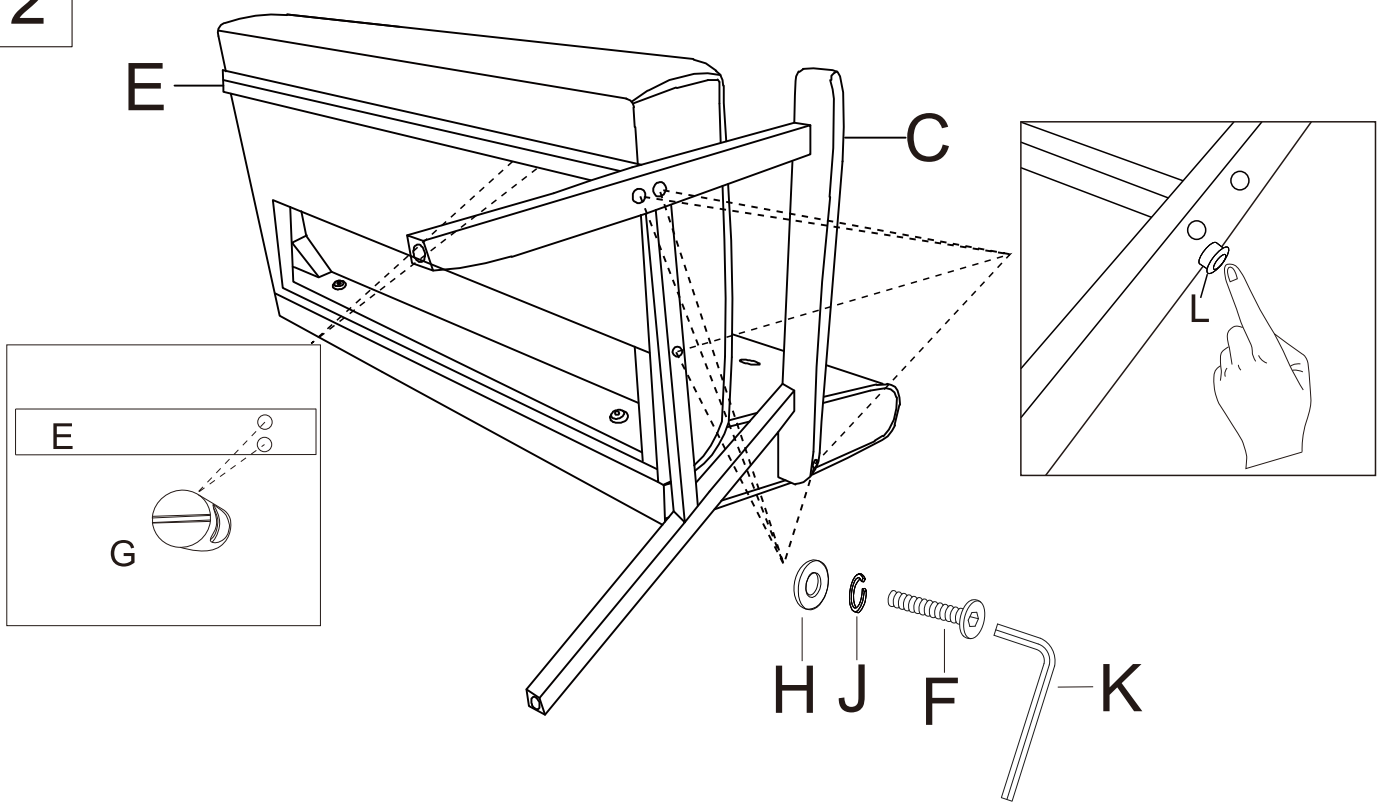
E
C
L
E
G
H
J
F
K

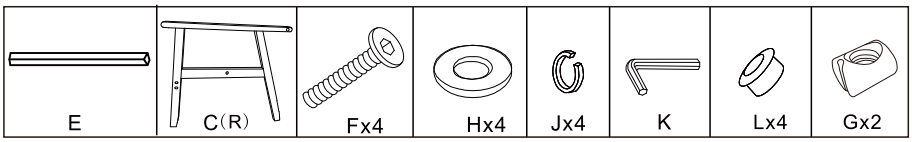
E
C(R)
Fx4
Hx4
Jx4
K
Lx4
Gx2

3

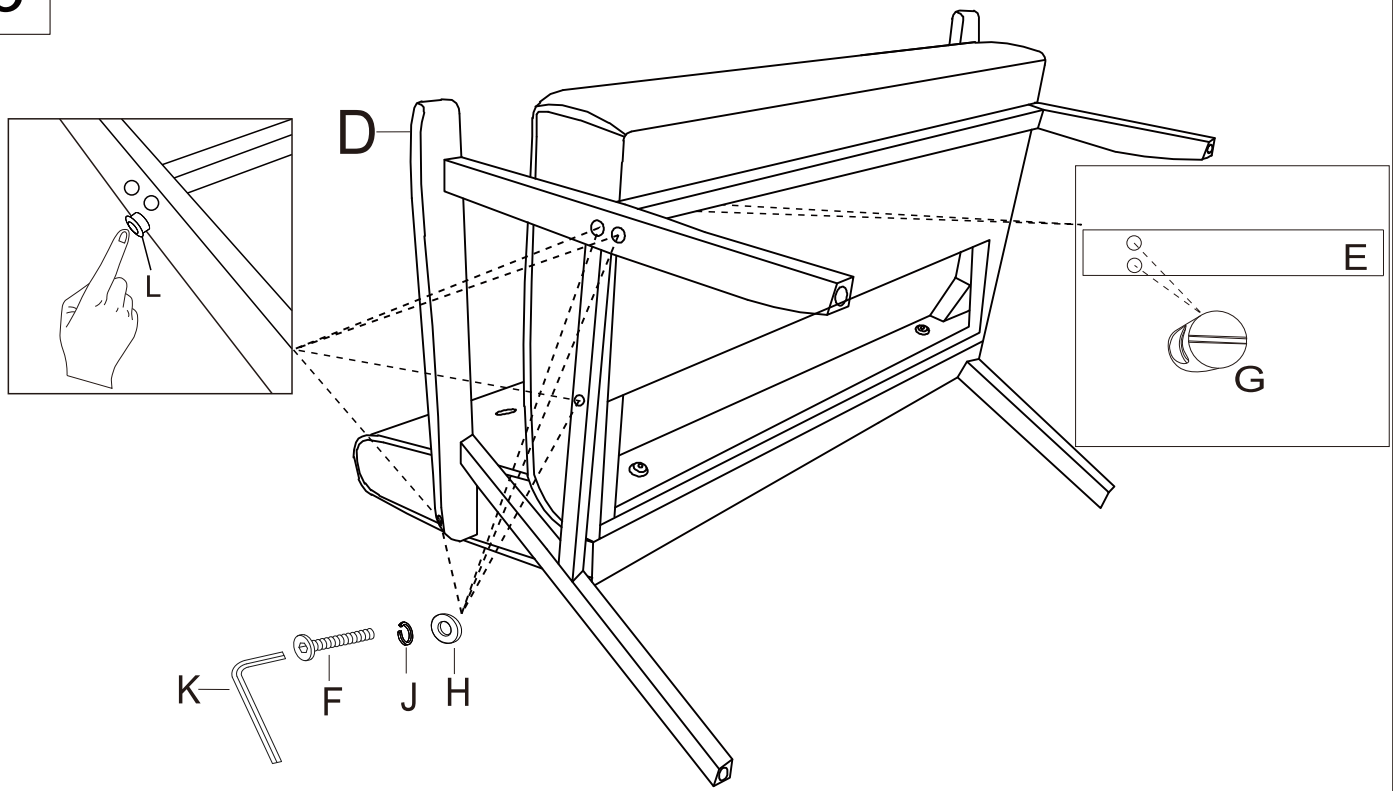
D
L
E
G
K
F
J
H

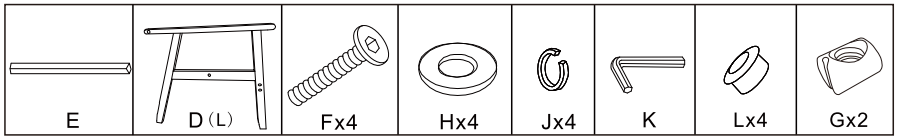
E
D(L)
Fx4
Hx4
Jx4
K
Lx4
Gx2