CEILING FAN LIGHT

Installation Manual

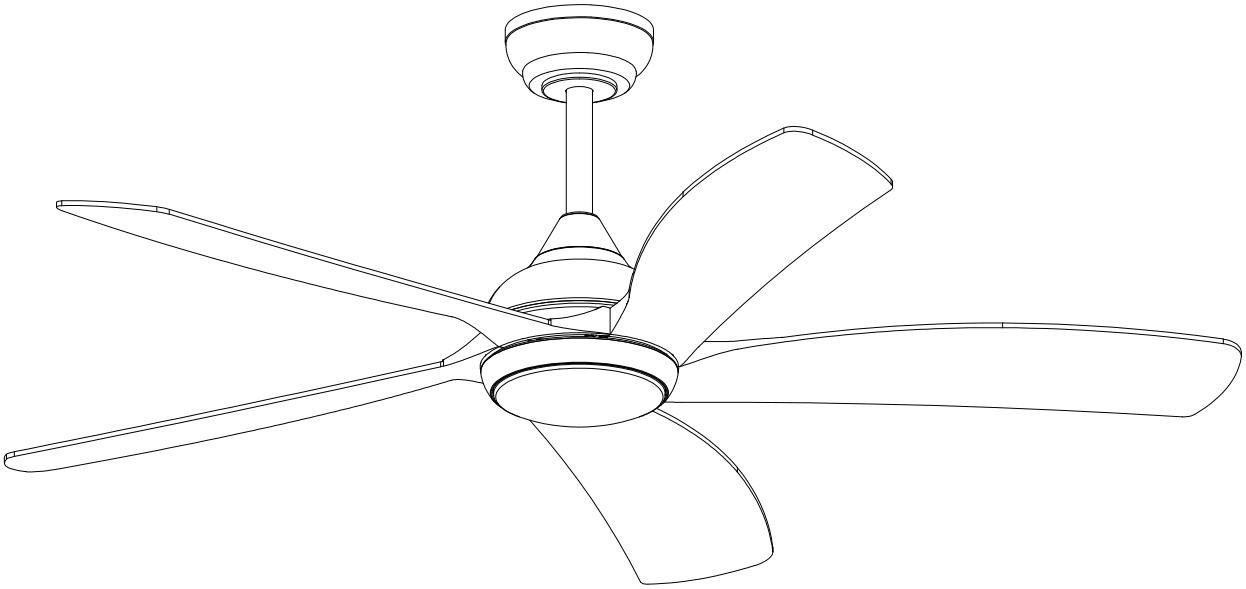

Please keep this manual.
Be sure to read the instructions for use of this product,install and use this product in accordance with the requirements therein.

Model : HY-6082

Table Of Contents

Safety precautions and tools----------02

Package Contents----------03

Assembling The Ceiling Fan----------04-06

Install Hanging Plates----------07

Wiring and Mounting----------08-10

Remote Control----------11

Connection Guide----------12-14

Maintenance & Repair----------15

Safety Precautions and Tools

Safety Precautions:

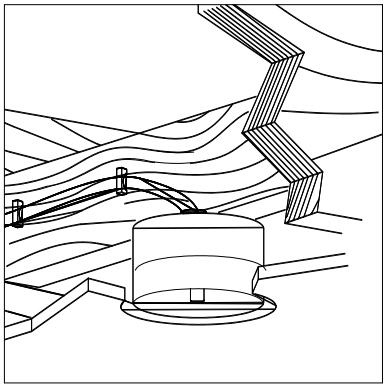

Make sure the fan is firmly attached to the building structure or a proper outlet box.

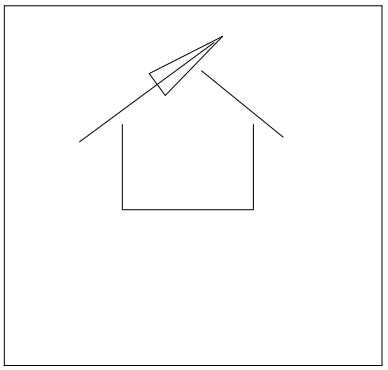

The ceiling angle for inclined ceiling installation should be less than 30 degrees

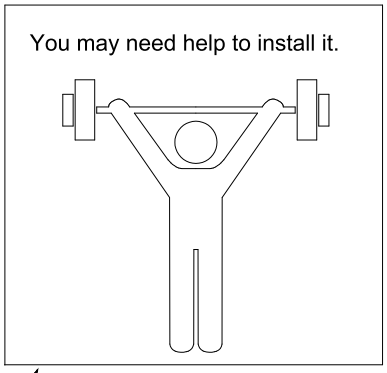

Ensure that the mounting structure can support the weight of the fan.

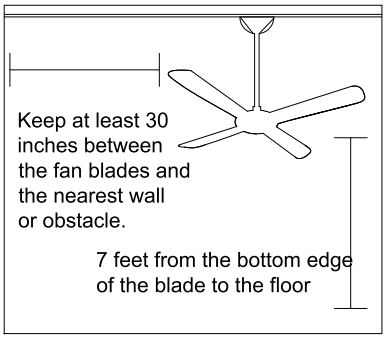

Evaluate location.

Installation Tools:

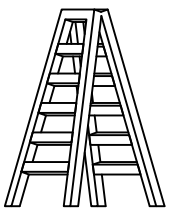

Ladder

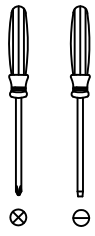

Screwdriver

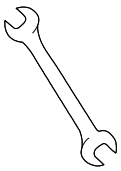

11mm wrench



Pliers

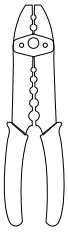

Wire stripping machine

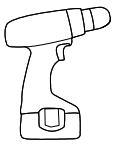

Power drill



Drill

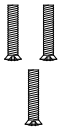

Machine screws

Package Contents

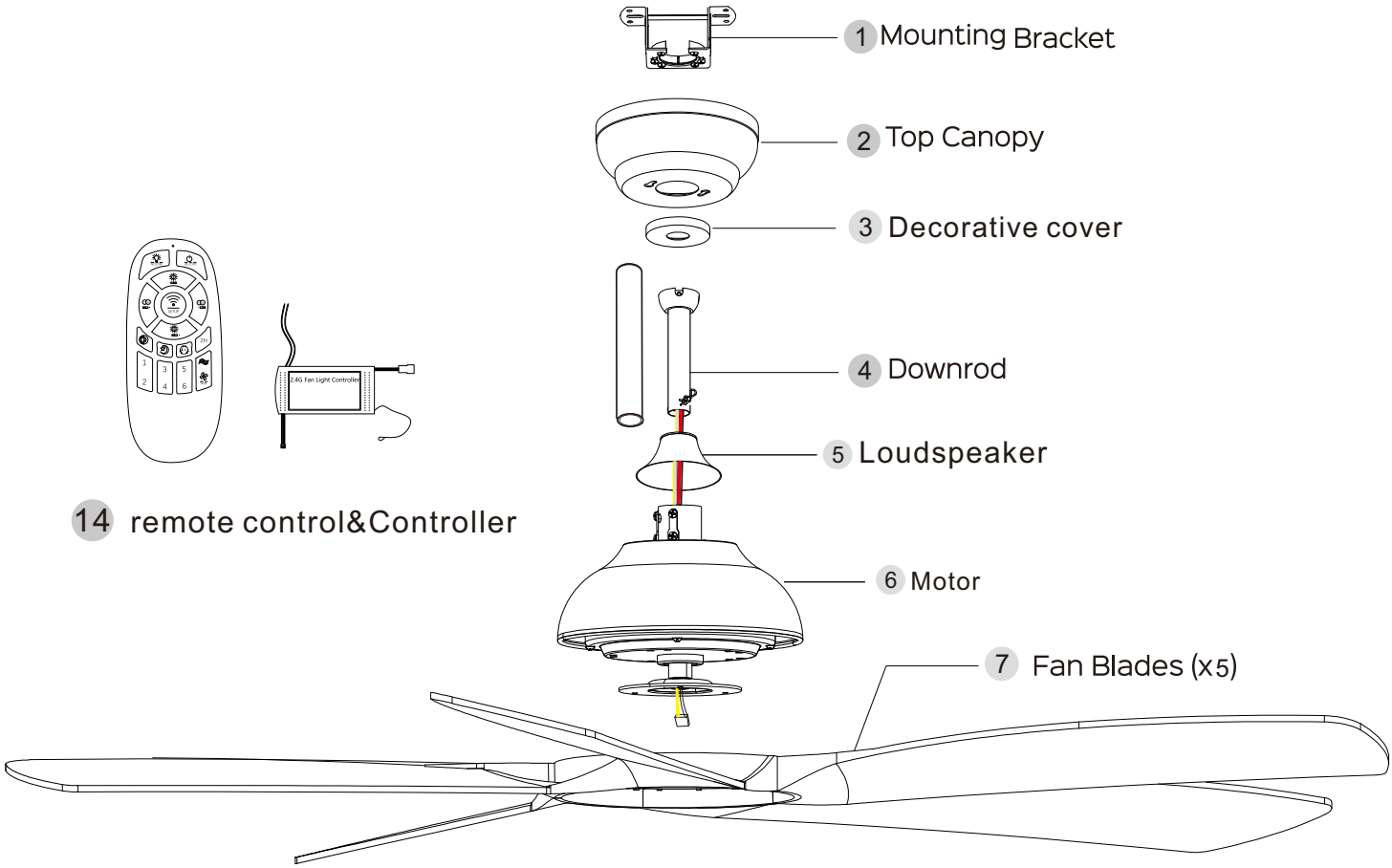

14 remote control&Controller



8 Lock blade screw(x10)

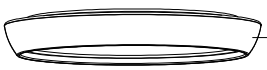

9 Lamp Tray



10 Lock the screws of the lamp panel(X3)

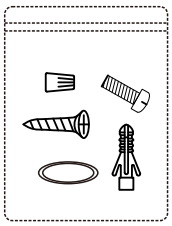

15 Accessory Pack

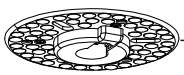

11 LED light source



12 Lock the LED screws(X3)

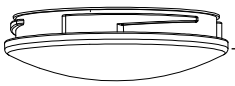

13 Lampshade

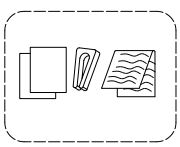

16 Balanced post

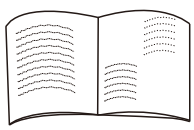

17 User Manual

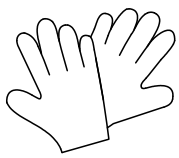

18 Pair of gloves

Assembling the Ceiling Fan

1.Install the Blade

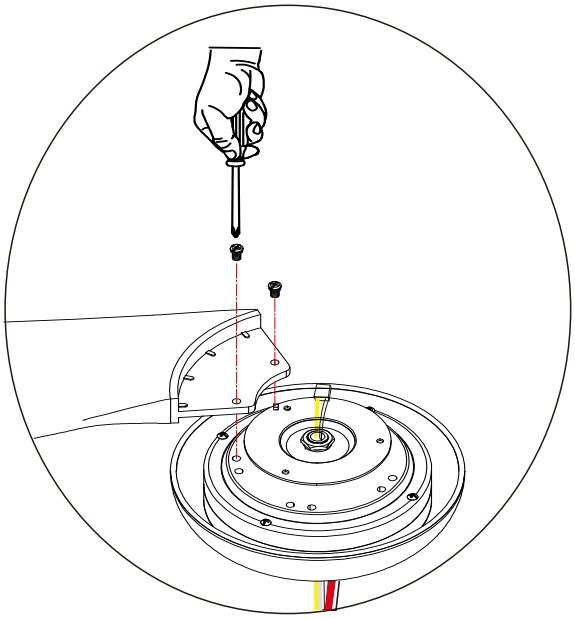

1 Secure the fan blades to the motor with screws

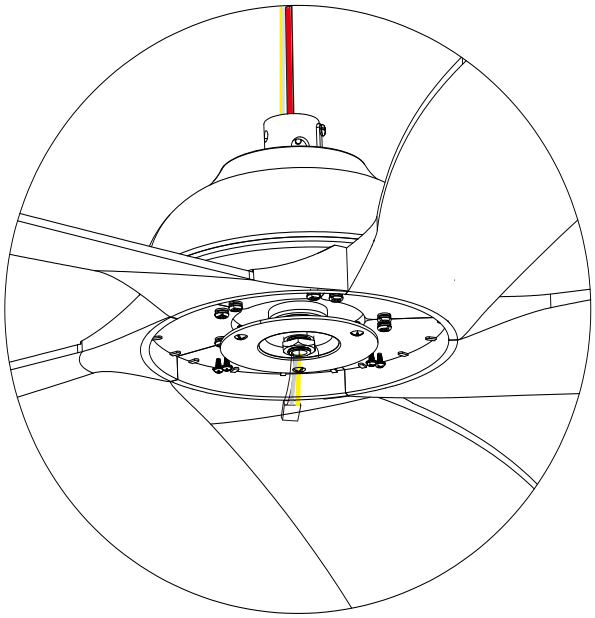

2 Complete the installation of the fan blades

2.Install the LED light panel

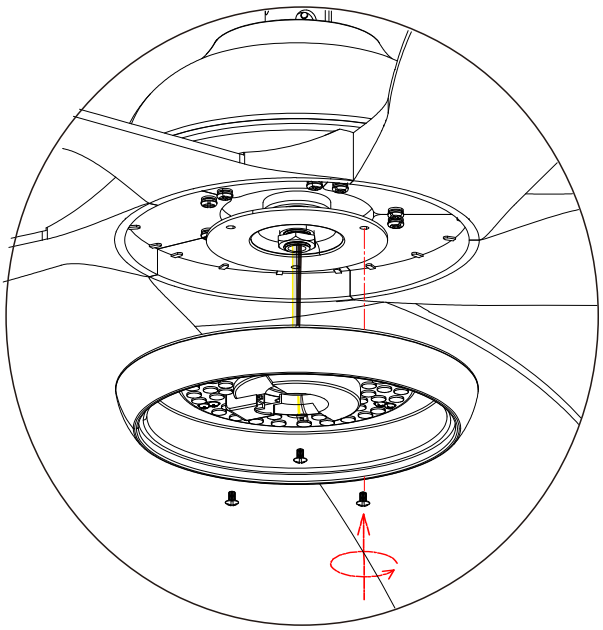

1 Fix the lamp panel to the motor with screws

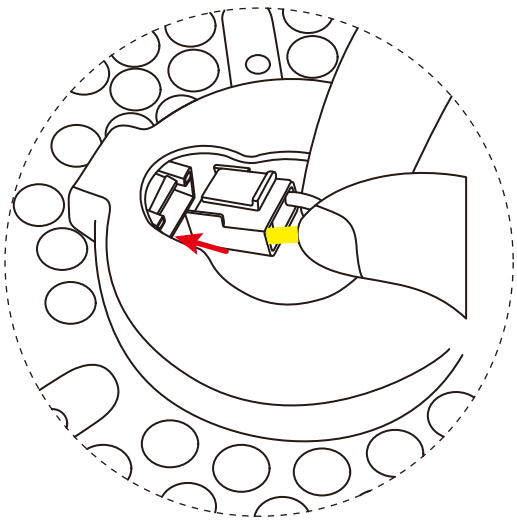

2 Insert the power cord of the LED panel light properly

3.Install the lampshade

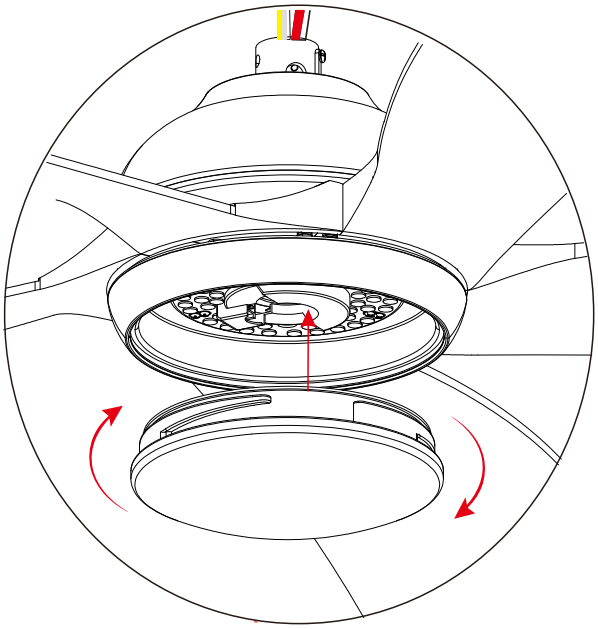

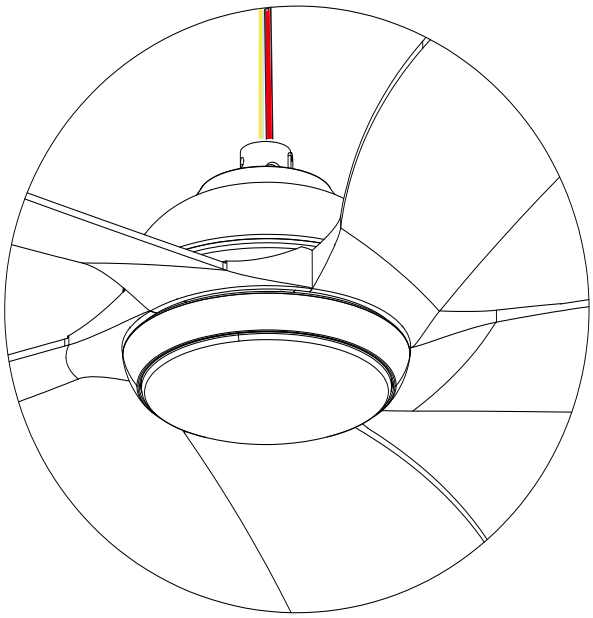

1 Screw the acrylic cover into the fixing plate

2 The installation of the lampshade is completed.

4.Assemble the suspender rod

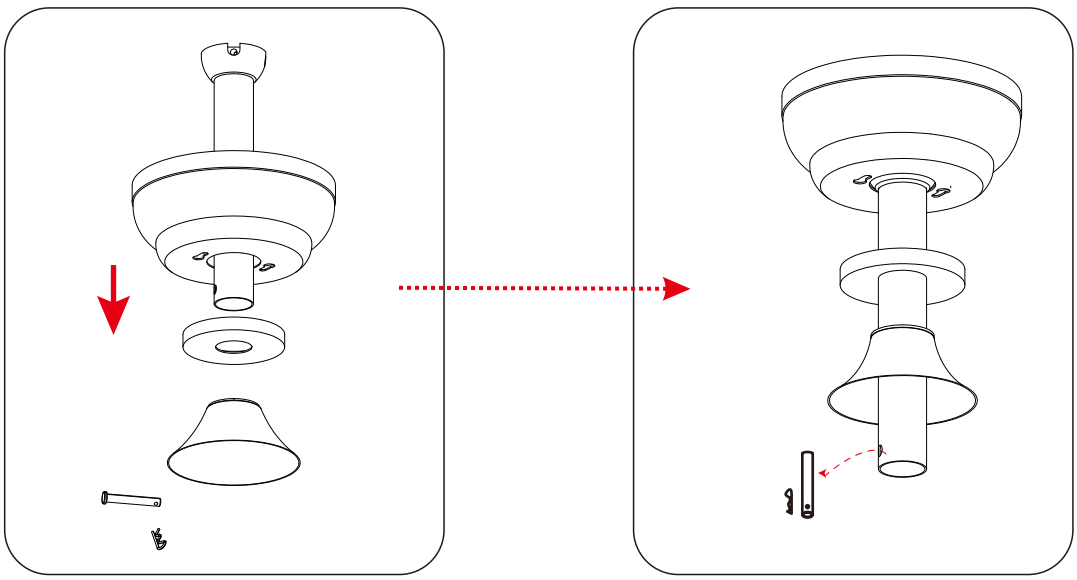

1 Connect each component with hanging rods as shown in the figure above.

5.Connect the lamp body with the suspender rod

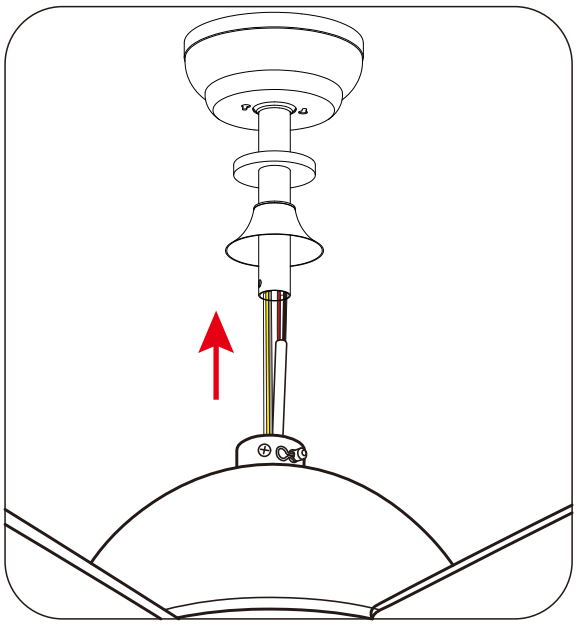

1 Thread the electric wire through the iron pipe all the way up to the top.

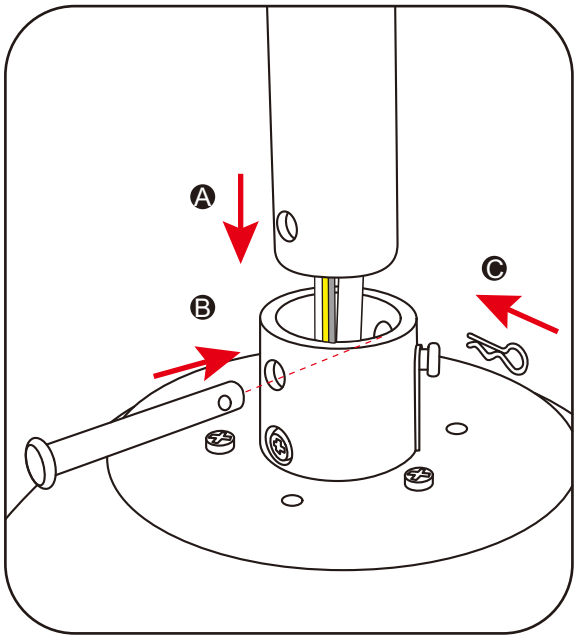

2 A.Insert the rod into the hole
B.Insert the safety pin
C.Lock the withdrawal pin

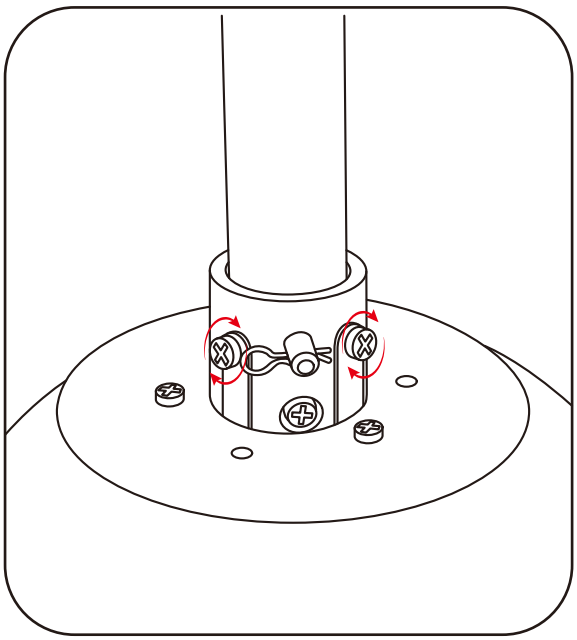

3 Tighten the two screws on the side

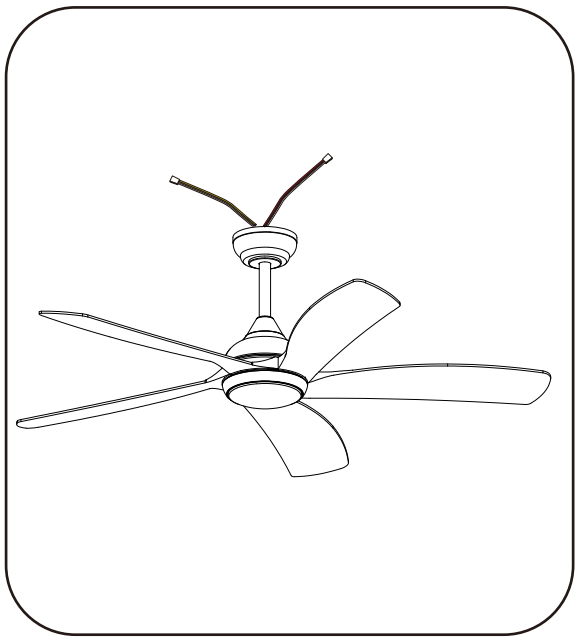

4 The lamp body assembly is completed.

Install Hanging Plates

Turn off the power supply

6. Fix the hanger bracket to the ceiling.
Choose the installation method based on your home's ceiling structure.

A

① wooden ceiling

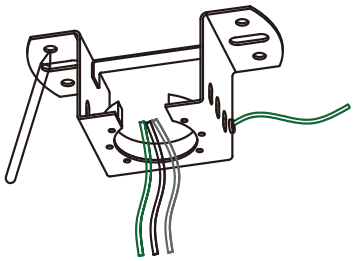

Mark the holes with a pencil

②

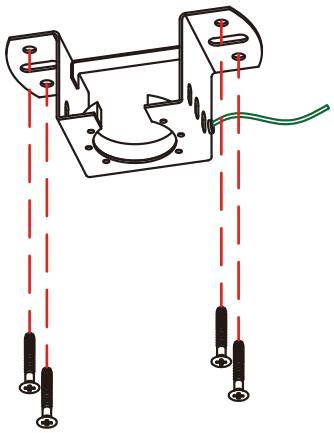

Tighten the screws with a screwdriver

③

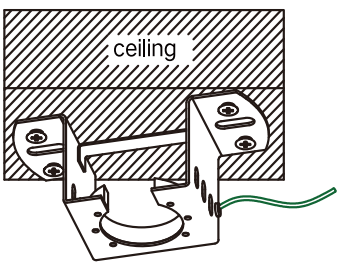

Complete ceiling mount installation

B

① concrete ceiling

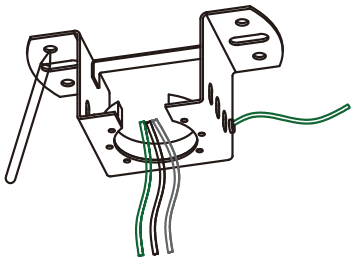

Mark the holes with a pencil

②

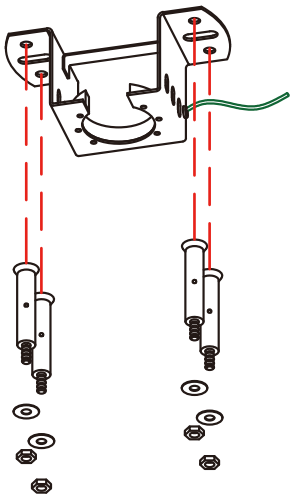

Use an electric drill to drill holes for the mark, then drive in the expansion screws, put on the hanger, put on the washers, nuts, and tighten with awrench.

③

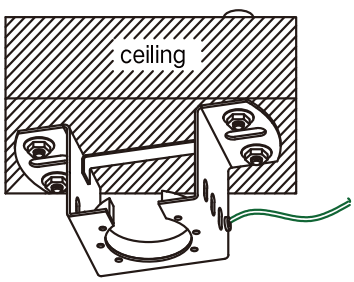

Complete ceiling mount installation

C

① Embedded junction box

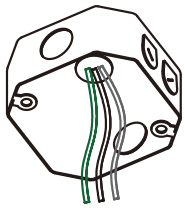

②

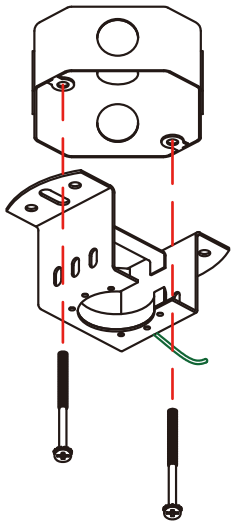

Tighten the screws with a screwdriver

③

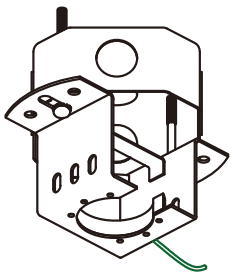

Complete ceiling mount installation

Wiring and Mounting

7. Hang the downrod onto the mounting base, make sure it fits the groove, then insert the controller into the slot of the mounting bracket, make sure the wires are not twisted or bent.

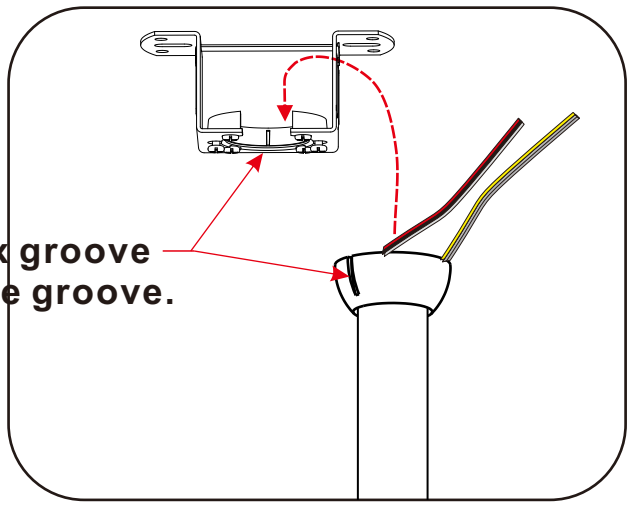

1 Put the semi - spherical ball into the support.

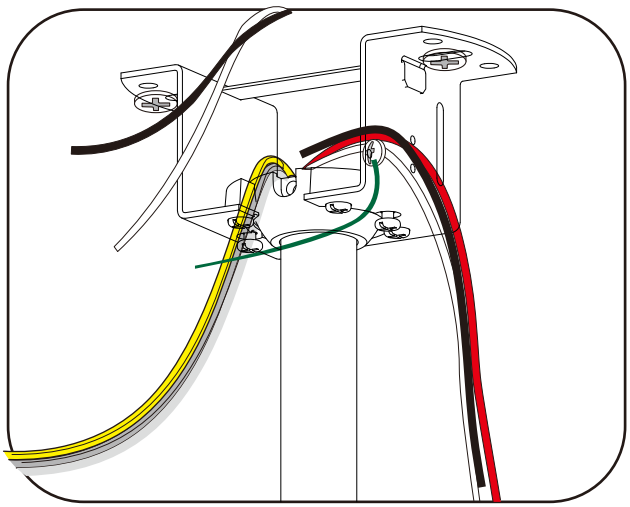

2 The completed effect

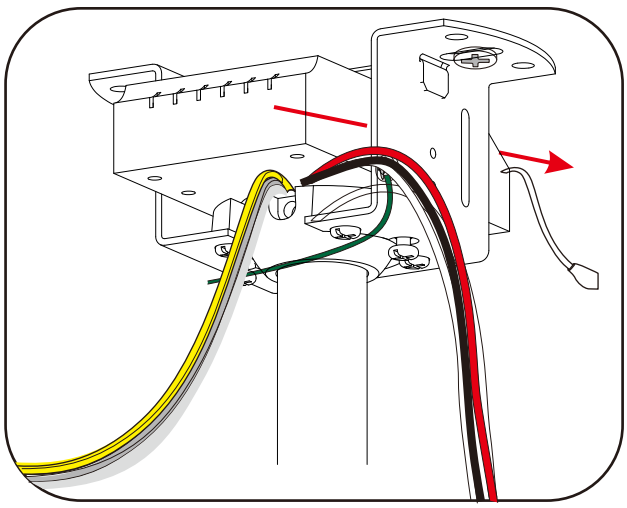

3 Insert the controller into the hanging plate.

8.Circuit connection

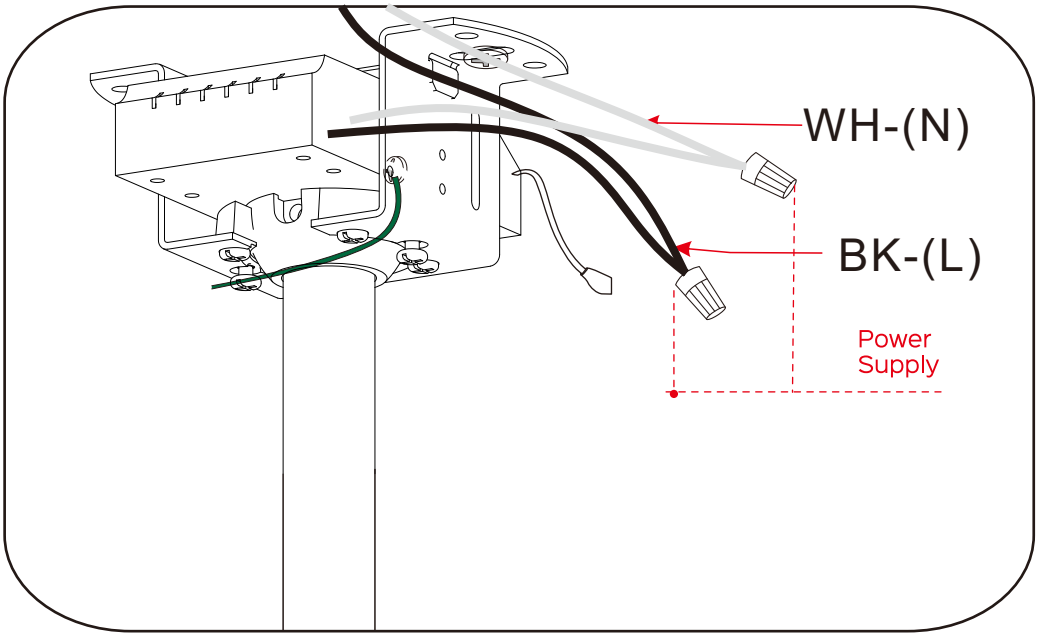

1 .Use wire nuts to connect the thick Black wire to the live wire,thick white to the neutral wire of the mains power cord.Connect the green ground wire

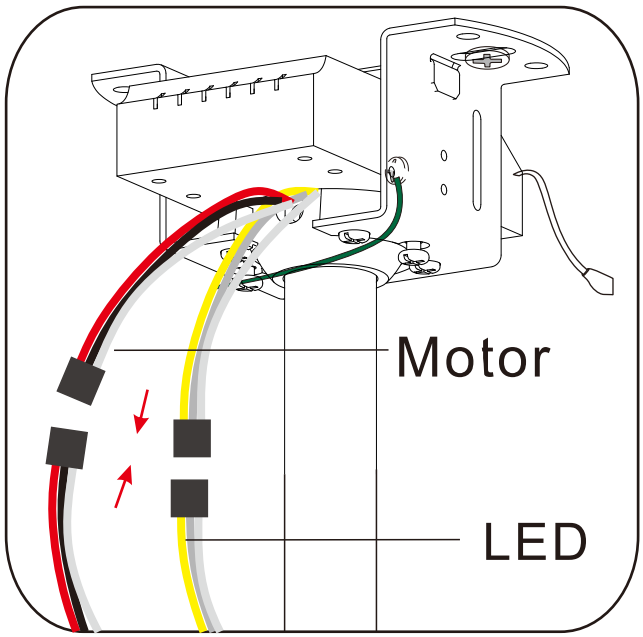

Connect the wires of the same color

2 .Connect the fan motor and light connectors to the sockets of the controller.

9.Install the ceiling-mounted plate

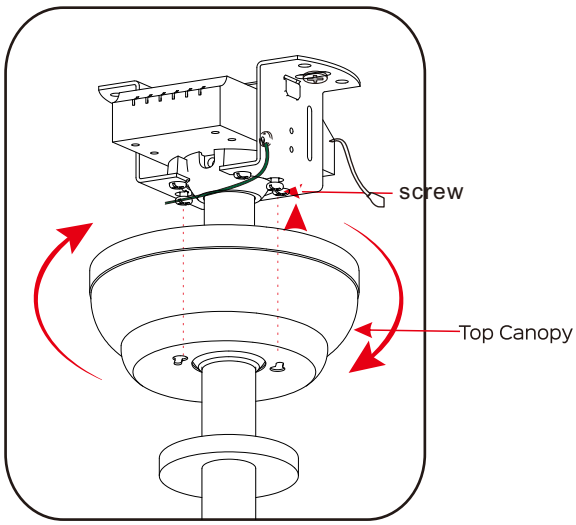

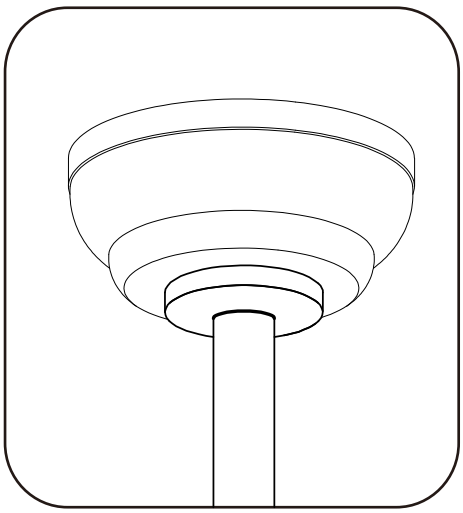

1 Rotate the ceiling - mounted plate

2 Close the ceiling - mounted plate

10. Power-on test

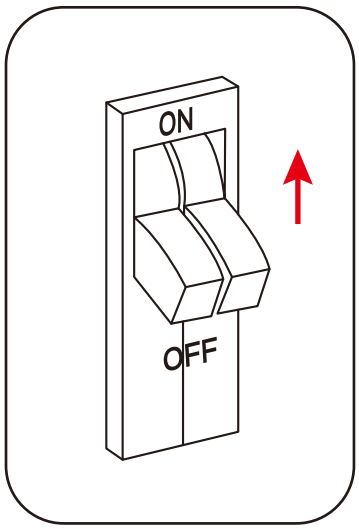

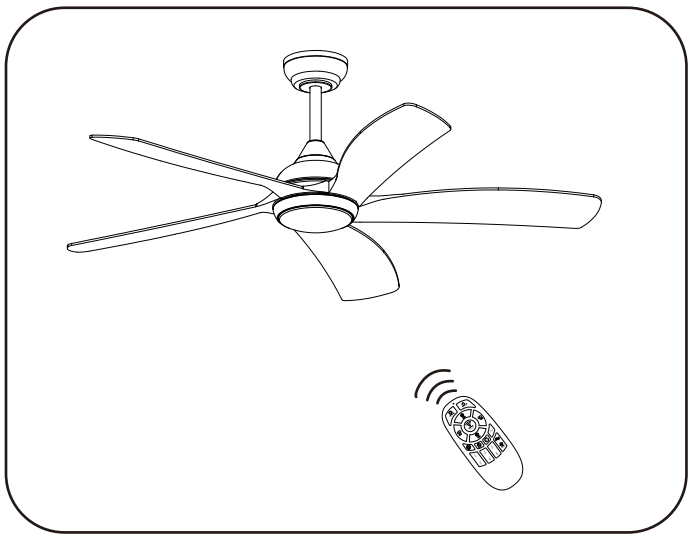

1 Turn on switch

2 Turn on the fan with the remote control, installation completed

Remote control use guide

①: Turn on/off the light
②: All off
③⑥:Brightness adjustment
④⑤: Color temperature adjustment
⑦: Remote control pairing
⑧: Color temperature switching
⑨: Night light
⑩: 2H fan timing
⑪: Fan forward/reverse rotation
⑫: Fan adjusting gear 1-6
⑬: Natural wind mode
⑭: Turn off the fan

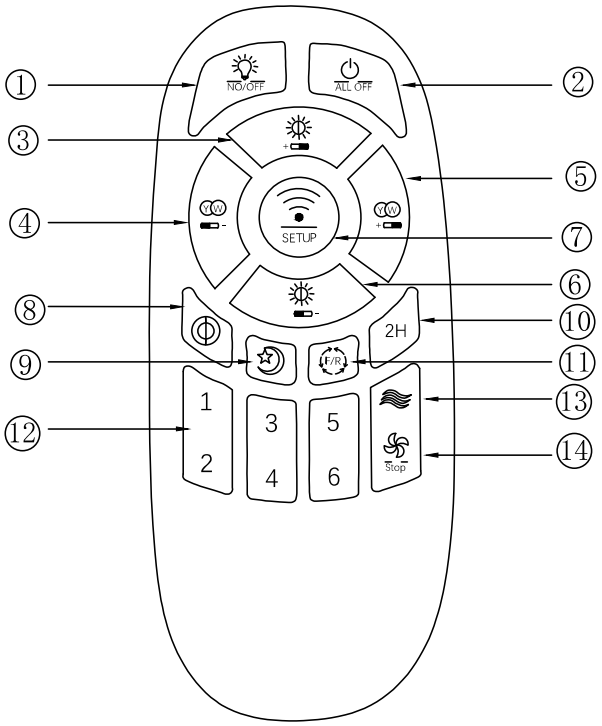

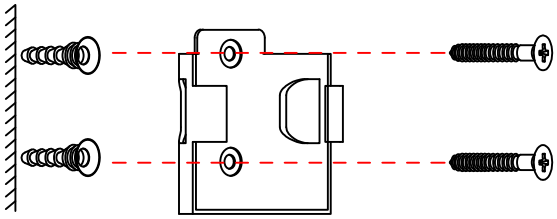

The remote control bracket can be mounted on the wall using two expansion rubber screws for easy later use.

How to pair the the remote with the fan light:

1, Turn on the wall switch and power on the fan light.
2, Long press the" SETUP Pairing button" in 3 second.
3, And look at the LED Light, if you noticed that the LED light flashed 3-4 times, then it is successful, now you can use the remote to control the fan light.

APP control use guide

Scan and download mobile APP

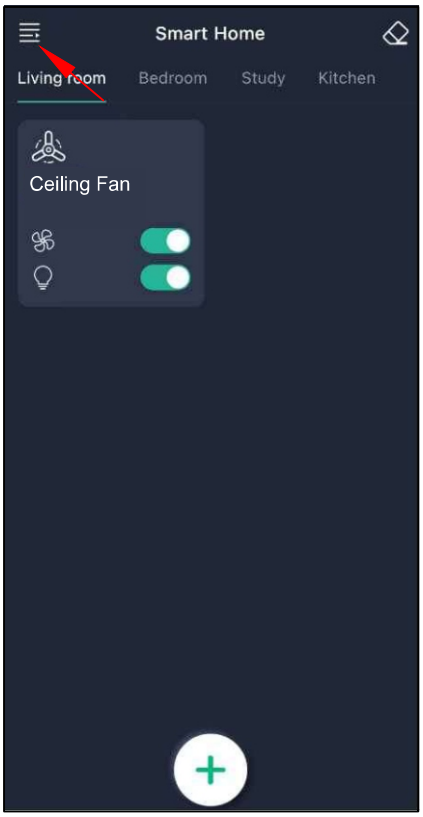

To get more detailed APP user manual by clicking on the upper left corner

How to pair the APP with the fan light?

1.Download APP by scan the QR or search " FanLamp Pro" in APP store.
2.Turn on your phone's Bluetooth, please note the fan light device will not show in the bluetooth list. Just turn on the bluetooth is OK.
3.Turn on the APP
4.Select a room, click to add a device name, and confirm, such as"fan light 01"
5. Turn off the fan light by wall switch first, and then turn on the fan light by wall switch again.
6.Press and hold the pairing button on the app for 5 seconds. At this time, the LED light will flash 3-4 times, indicating that the pairing has been successful.

Introduction for APP button



Pair button.In order to ensure that the application can successfully control the device,please click this button  within 5 seconds after the device is powered on.if the device flashes or beeps,it means that the phone has been successfully paired with the device,and then the device can be controlledthrough the application.



Click to select a time to turn off the device.



The wind blown by the fan after clicking is like the wind in nature.



The wind blown by the fan after clicking is suitable for sleep.



The fan will rotate reverse after clicking.



Click to change the direction of the wind.



The fan will rotate forward after clicking.



When you click,the white light and the yellow light will light up at the same time,but only at 10%of the maximum brightness.



When clicked,the white light and yellow light will light at the same time, and the brightness will be the maximum brightness.



When clicked,only yellow light will light up,and the brightness will be the maximum brightness.



When clicked,only white light will light up,and the brightness will be the maximum brightness.

Care and Maintenace:

- Turn off power before cleaning or performing maintenance.
- Dust the fan blades to maintain optimal performance.
- Check and clean the light fixture periodically.

Troubleshooting:

If the fan does not start:

1.Check if electricity is turned on at the fuse or circuit breaker.
2.Make sure the wall controller is "ON" and do not use a dimmer.
2.Check all electrical connections to ensure proper electrical connections are made.

If the fan sounds noisy:

1.Make sure all motor housing screws are tight.
2.Make sure the screws that attach the fan blades to the motor are tight.
in place.
4.Allow a 24-hour "breaking-in"period.Most noises associated with a new fan disappear during this time.
3.Make sure the screws securing the light are tight.Make sure the light shade is fixed securely

If the fan wobbles:

1. Make sure that the semi-circular ball of the upper end of down rod is clamped in the groove gap of the hanger without loosening.
2. To check if the two screws at the lower end of the downrod tightly locked
3. Check that all blade screws are secure.
4. Most fan wobbling problems are caused by blades unlevel. To check if all blades are at one level by measuring the distance to the ceiling from the tip of each blade.
5. Use the BLADE BALANCING KIT in the package to solve the problem of the blade not at one level.

If the light doesn't work:

1.Check the wiring between the motor and the driver, and the contact between the driver cable terminals.
2.Check whether there are loose or disconnected wires in the fan body.
3.Check whether the LED light source board is loose.
NOTE:Before entering the body, make sure the body circuit is turned off.

THANK YOU FOR USING!

WARM REMINDER

1.Due to the natural movement of the fan, some connections may become loose. Check the support connections, brackets, and blade attachments twice a year. Make sure they are secure.
2.Clean your fan regularly to maintain its new appearance for years to come. Do not use water when cleaning, as this could damage the motor or wood, or possibly cause an electric shock.
3.Use only a soft brush or lint-free cloth to avoid scratching the finish. The finishing is sealed with a lacquer coating to minimize discoloration or tarnishing.
4.There is no need to oil your fan. The motor has permanently lubricated bearings.