FORIOUS

Specifications

Commercial Pull Down Single Handle Kitchen Faucet with Deck Plate

Models: WW004

Faucet Dimensions

Overall Height: 20.08"
Spout Height: 8.27"
Spout Reach: 8.66"

Feature

- Commercial Style Pull Down Faucet
- Stainless Steel Body
- ABS Sprayer
- 360° Swivel Spout
- Flow Rate: 1.8GPM at 60 psi
- Spray Type:Spray/Stream
- Quick Connect Sprayer Hose
- F - Valve
- 35mm Ceramic Cartridge
- Swivel Sprayer Connector
- Extendable hose up to 15"
- Environmental PEX material
- Connections 3/8" Compression
- Easy 1-Hole Or 3-Hole Installation
- Single lever handle
- 27.5" Stainless Steel Braided Waterlines
- Max Deck Thickness: 1.10"

Accessories Included

- Weight
- Deck Plate

Available Finishes

- Brushed Nickel
- Black
- Gold
- Gray

Warranty

FORIOUS Full Lifetime Warranty
Warranty against leaks,drips and finish defects to the orginal consumer

FORIOUS Customer Service
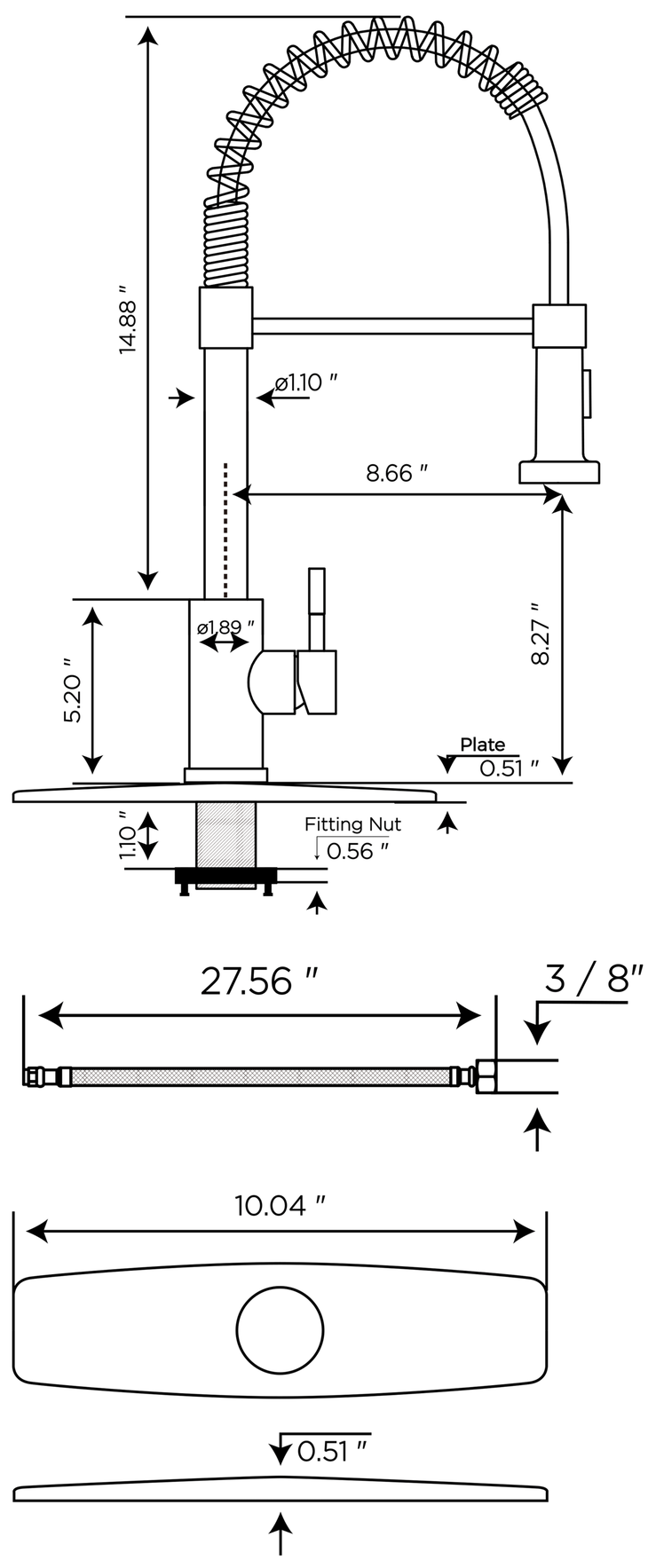
service@forious.com