ASSEMBLY INSTRUCTION
LEFT OR RIGHT IS UP TO YOU

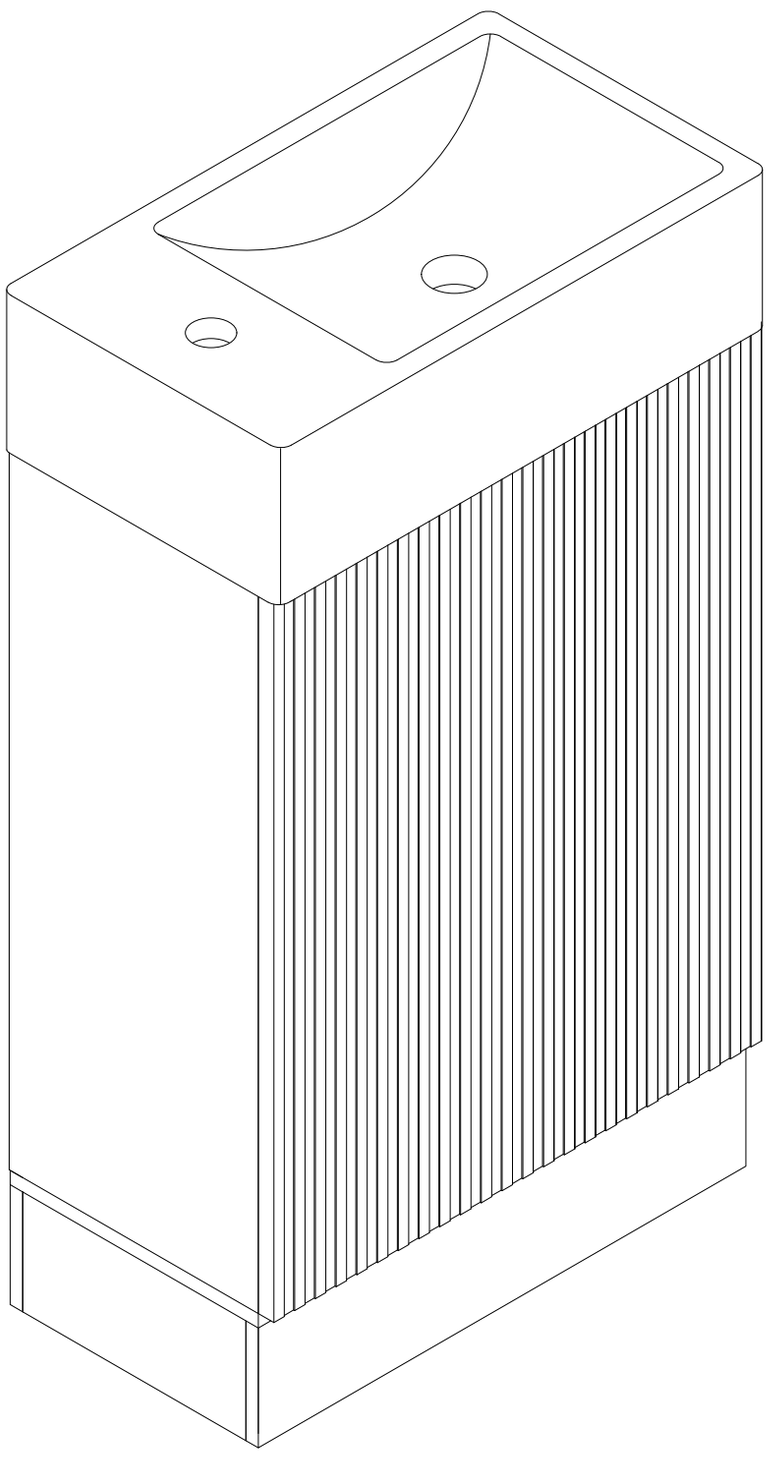

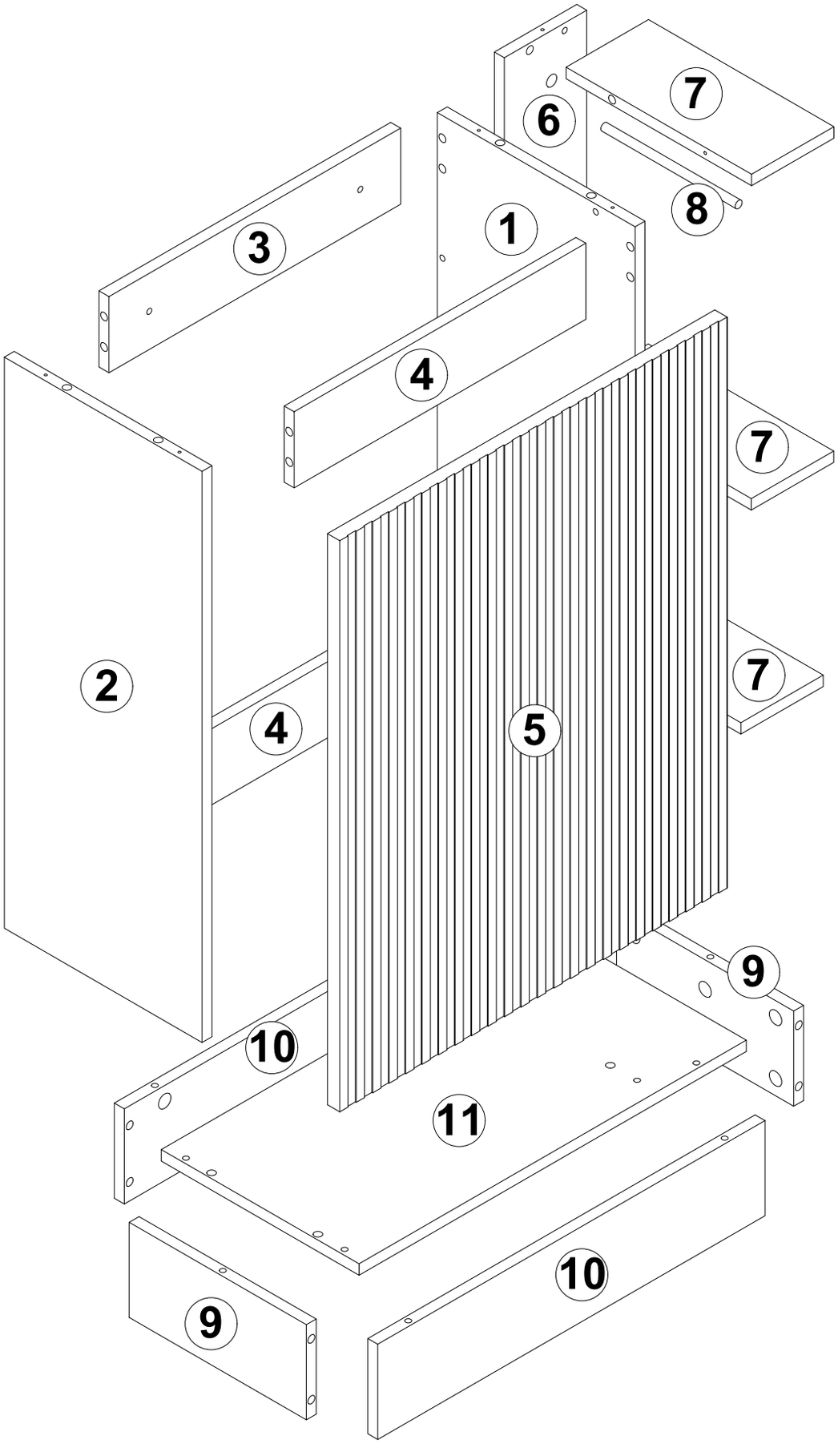
7
6
8
3
1
4
7
2
4
5
7
9
10
11
10
9

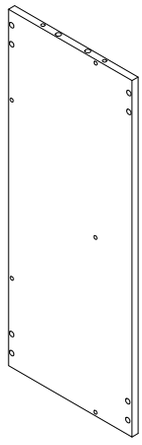	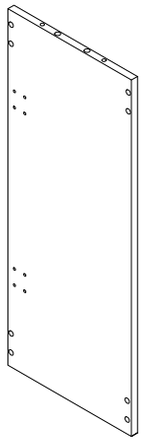	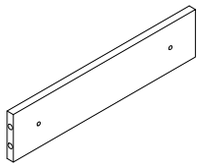	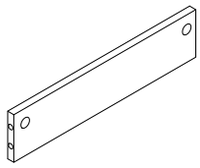
① x 1	② x 1	③ x 1	④ x 2
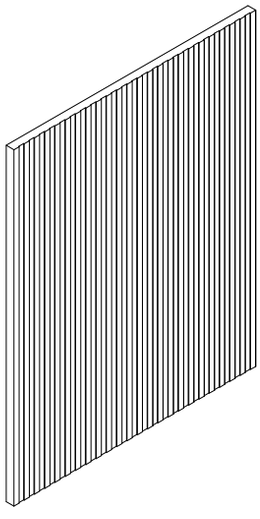	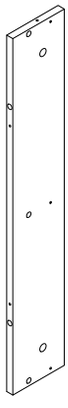	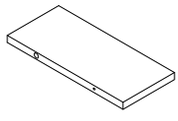	
⑤ x 1	⑥ x 1	⑦ x 3	⑧ x 1
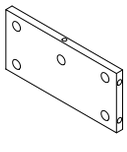	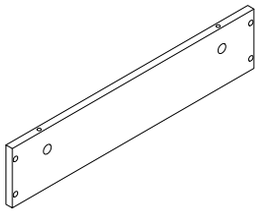	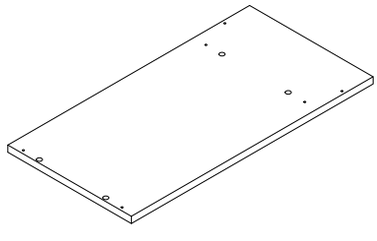	
⑨ x 2	⑩ x 2	⑪ x 1	

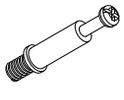		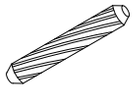	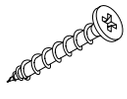		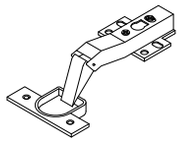
Φ6x35mm	Φ15x10mm	Φ6x30mm	Φ4x35mm	Φ3.5x12mm	
A x 20+2	B x 20+2	C x 18+1	D x 14+1	E x 12+1	F x 2
	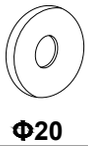			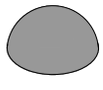	
Φ8x40mm	Φ20	Φ6x60mm			
G x 2	H x 2	I x 2	J x 1	K x 4	

Step 1

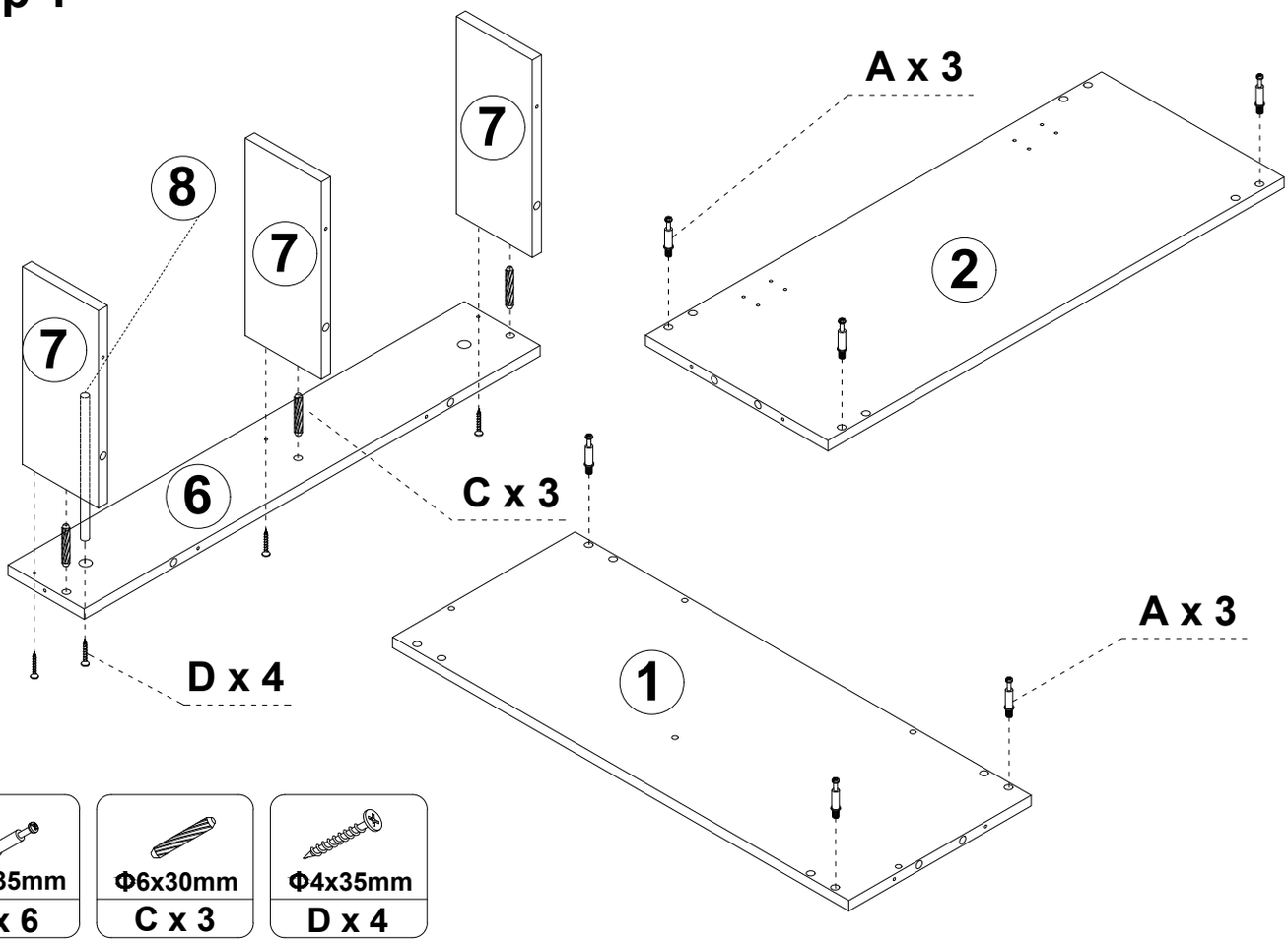

Φ6x35mm	Φ6x30mm	Φ4x35mm
A x 6	C x 3	D x 4

Step 2

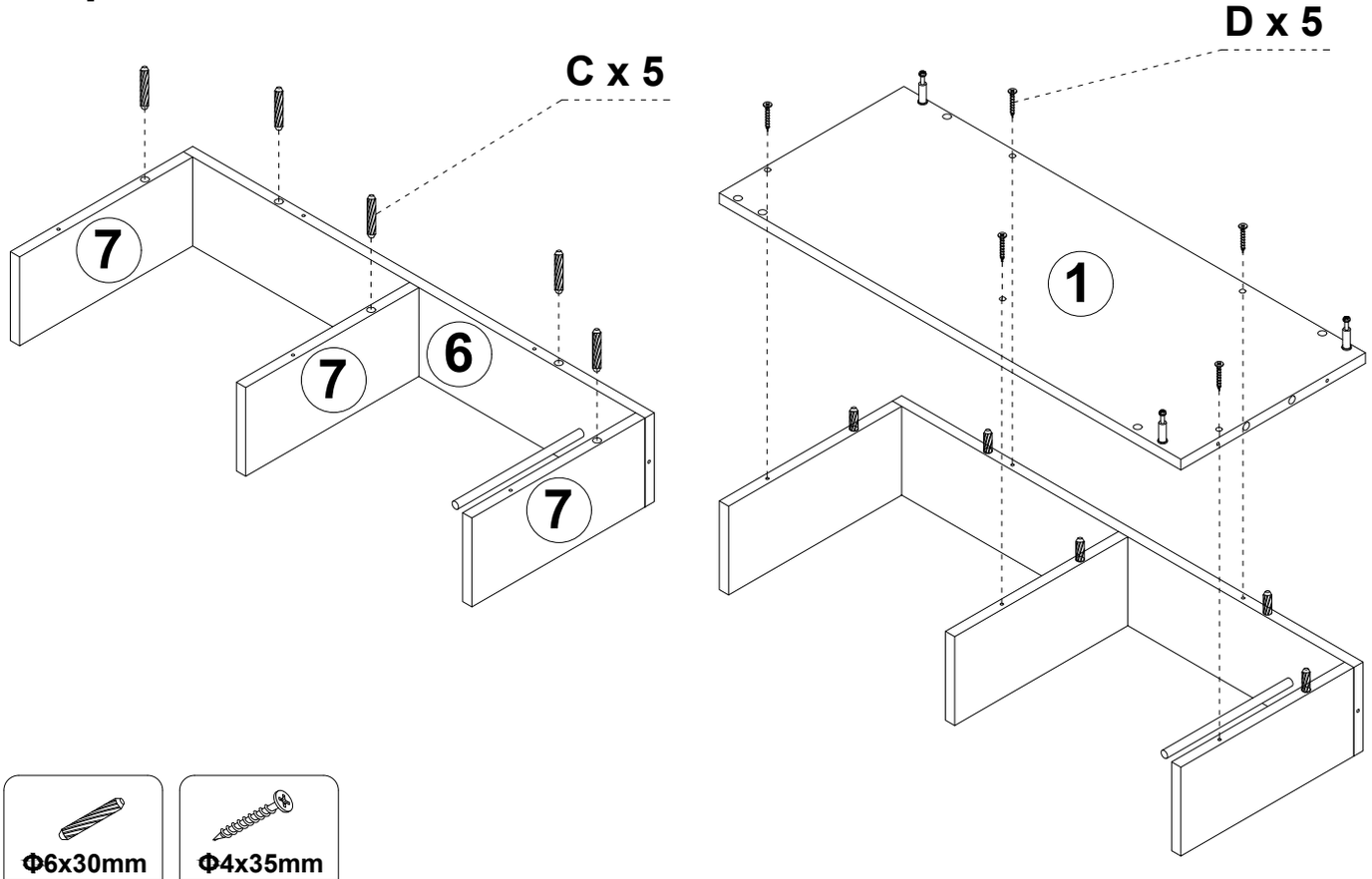

Φ6x30mm	Φ4x35mm
C x 5	D x 5

Step 3

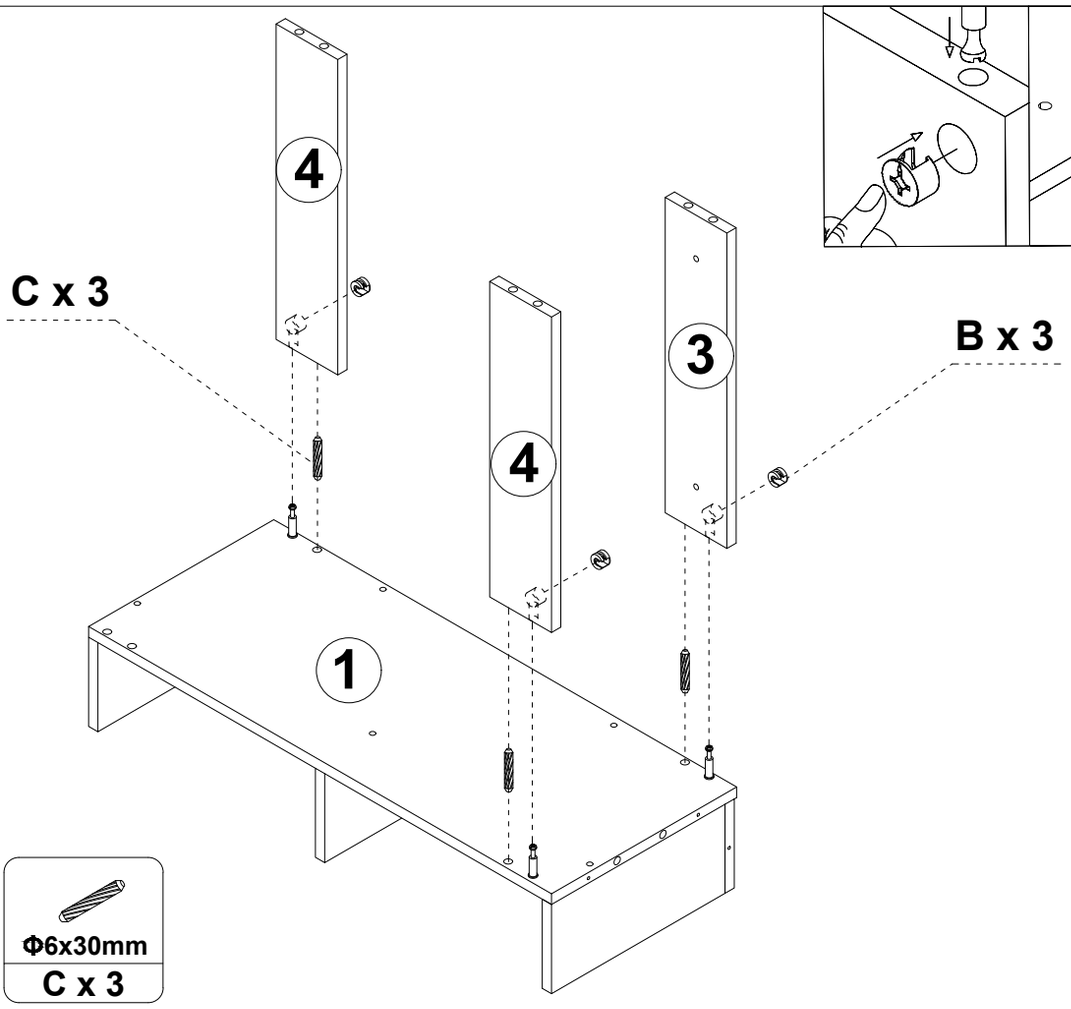

Φ15x10mm	Φ6x30mm
B x 3	C x 3

Step 4

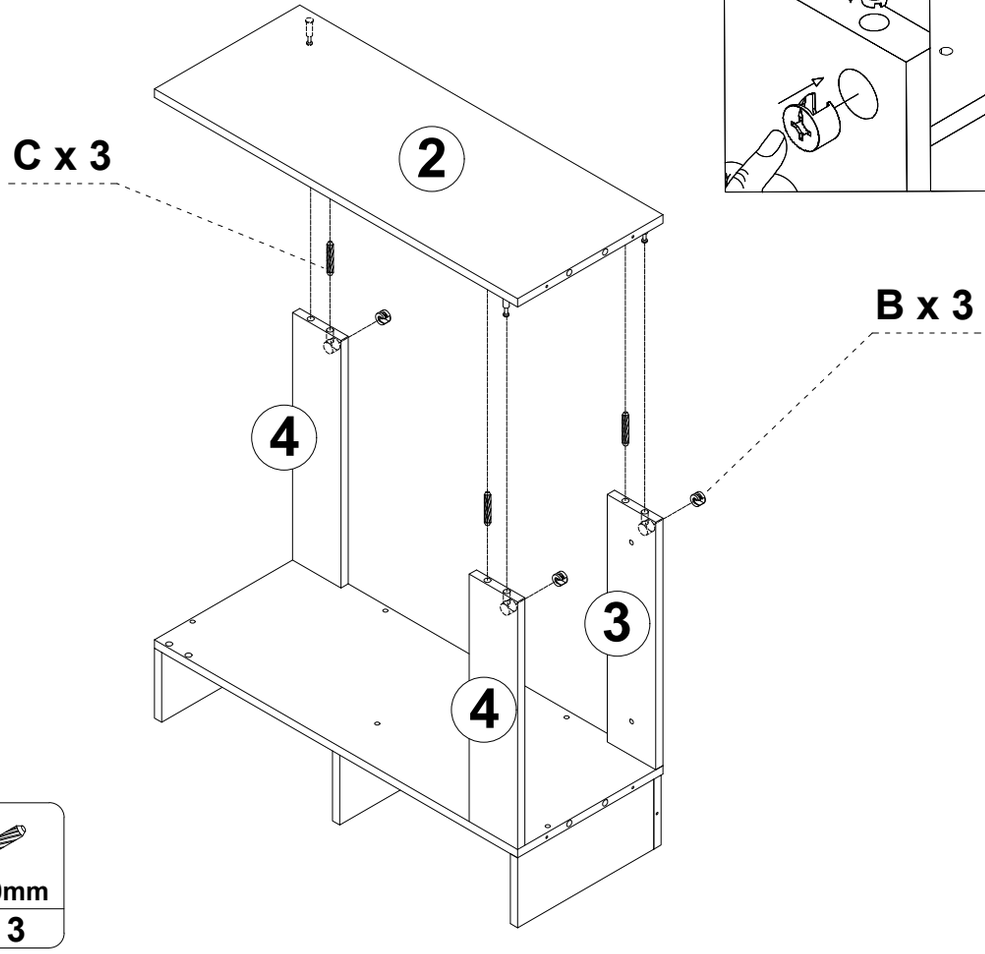

Φ15x10mm	Φ6x30mm
B x 3	C x 3

Step 5

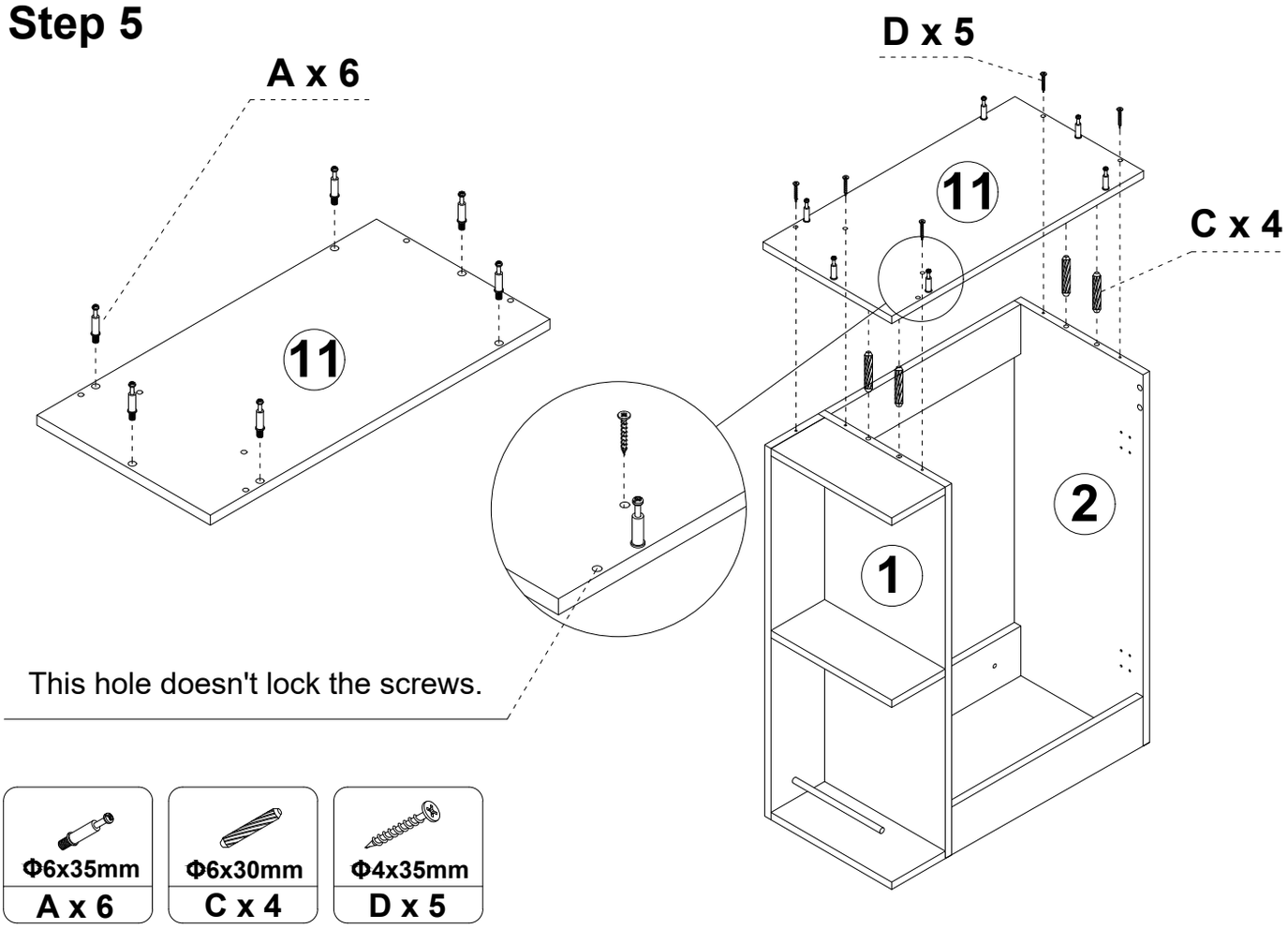

Φ6x35mm	Φ6x30mm	Φ4x35mm
A x 6	C x 4	D x 5

Step 6

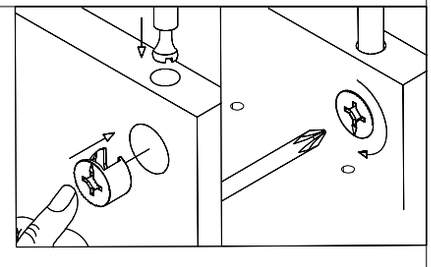

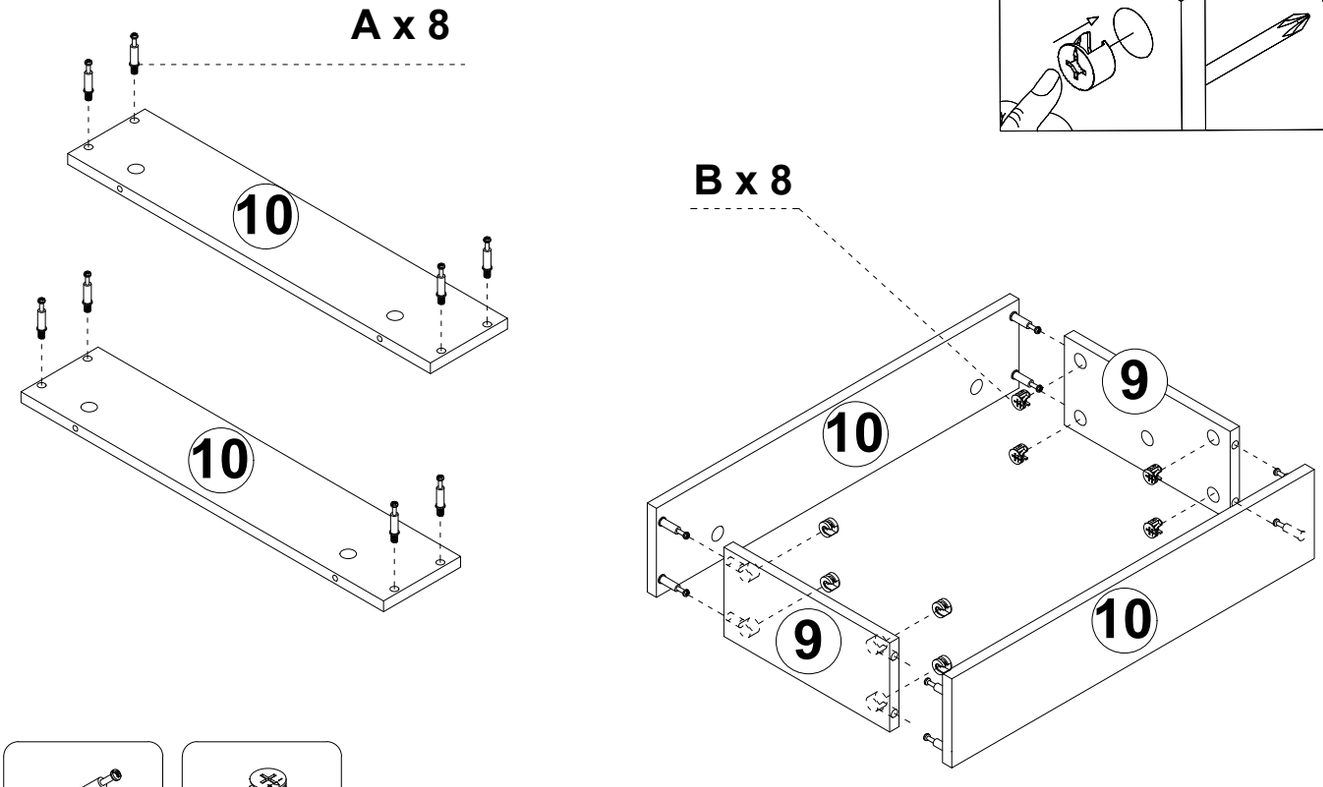

Φ6x35mm	Φ15x10mm
A x 8	B x 8

Step 7

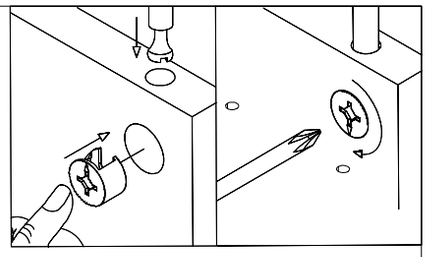

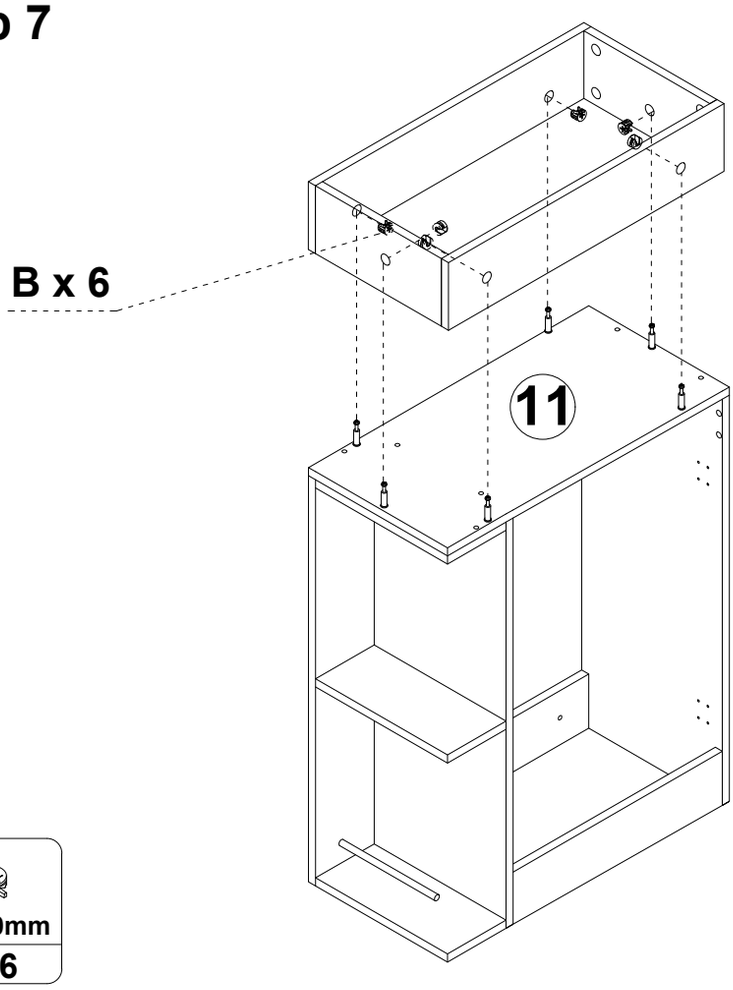



Φ15x10mm

B x 6

Step 8

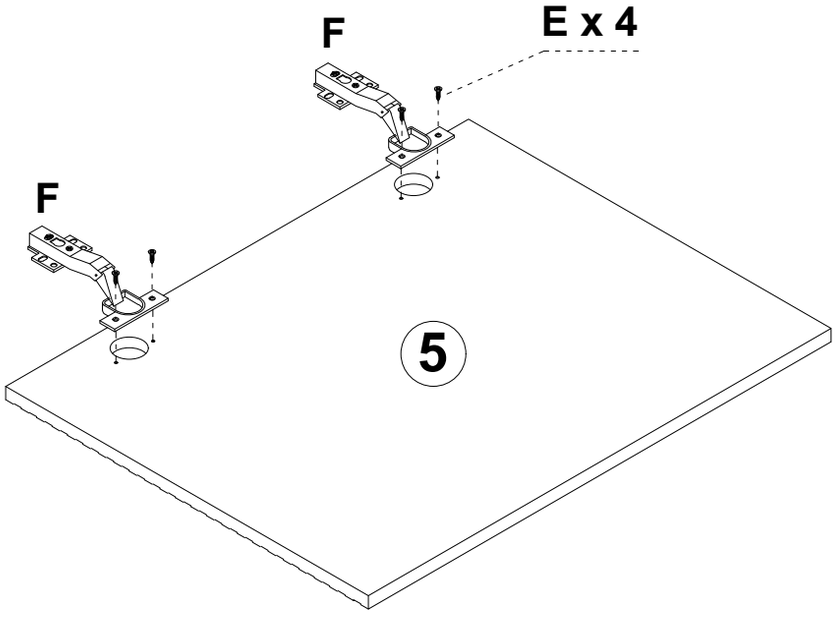



Φ3.5x12mm

E x 4

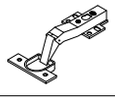

F x 2

Step 9

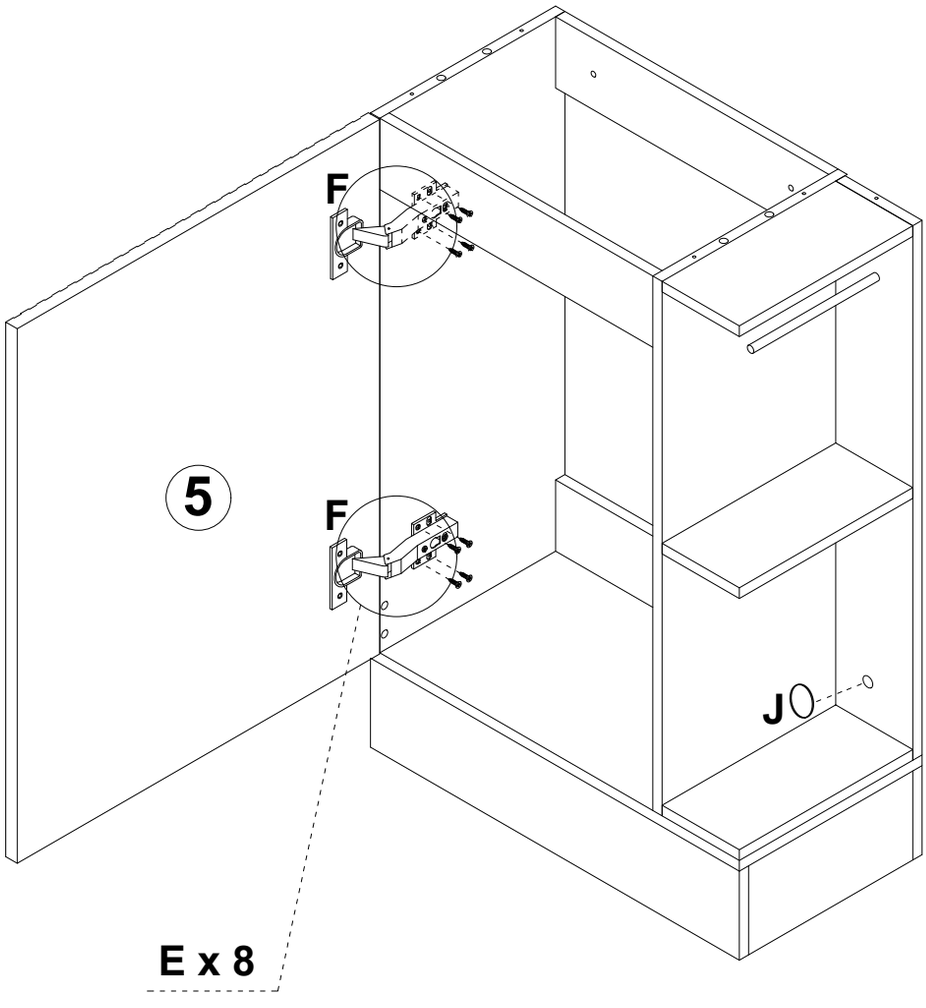

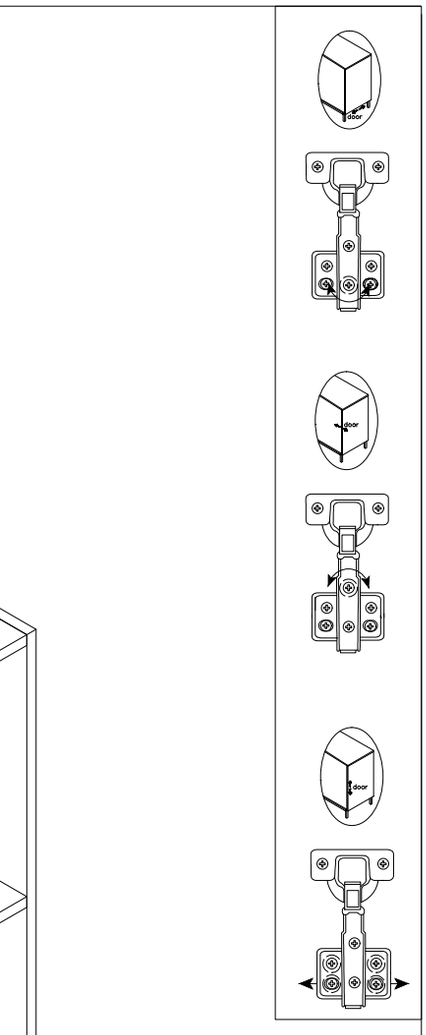

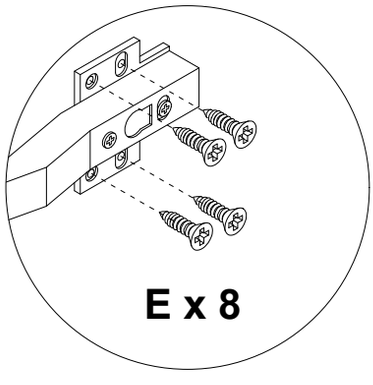

Φ3.5x12mm	
E x 8	J x 1

Step 10

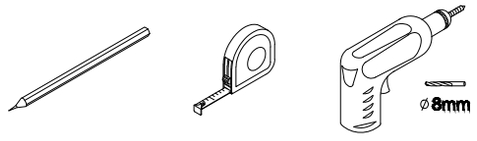

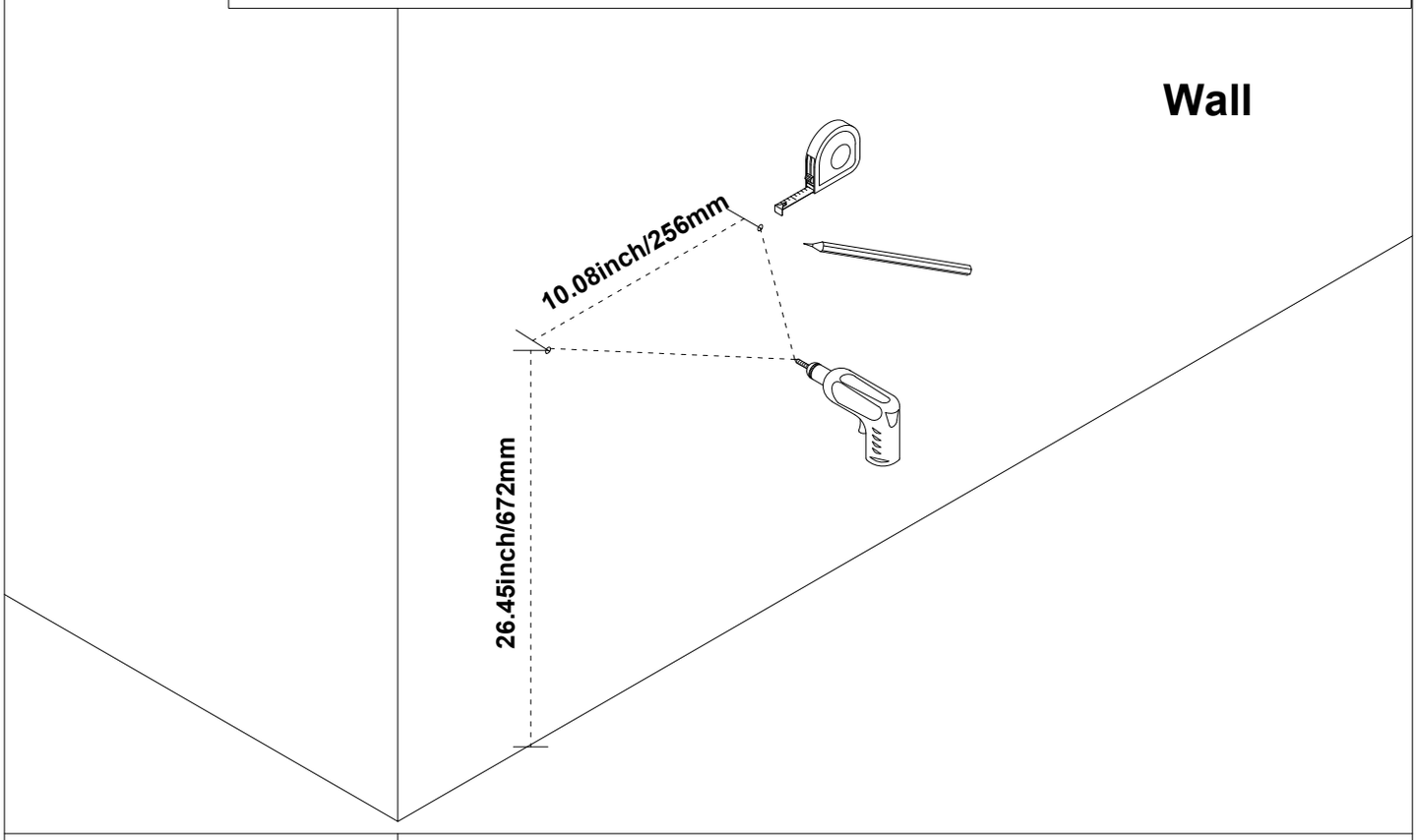

Step 11

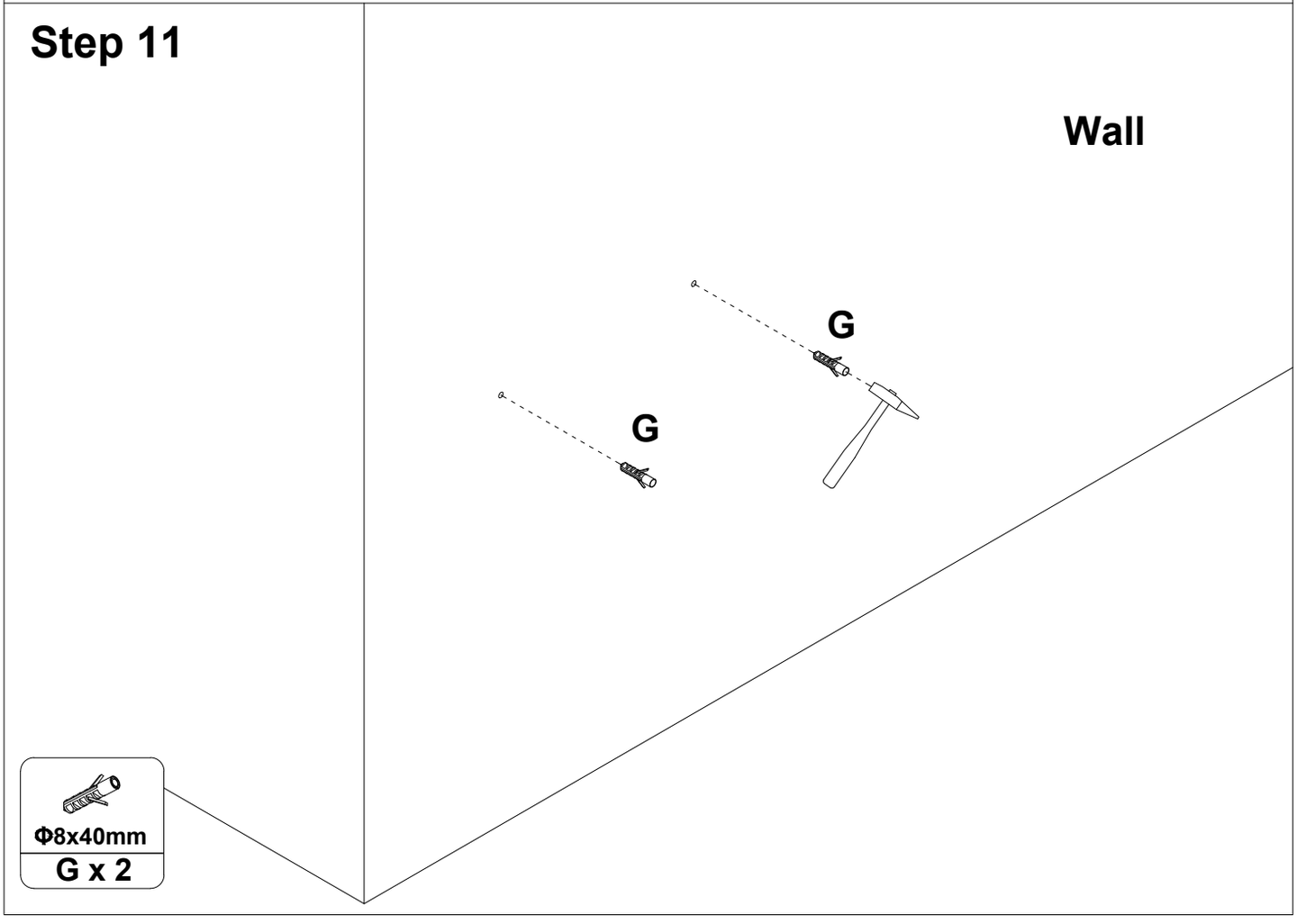

Step 12

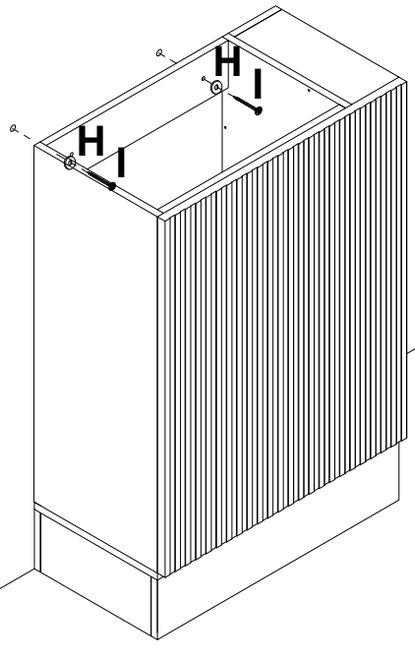



Φ20

H x 2



Φ6x60mm

I x 2

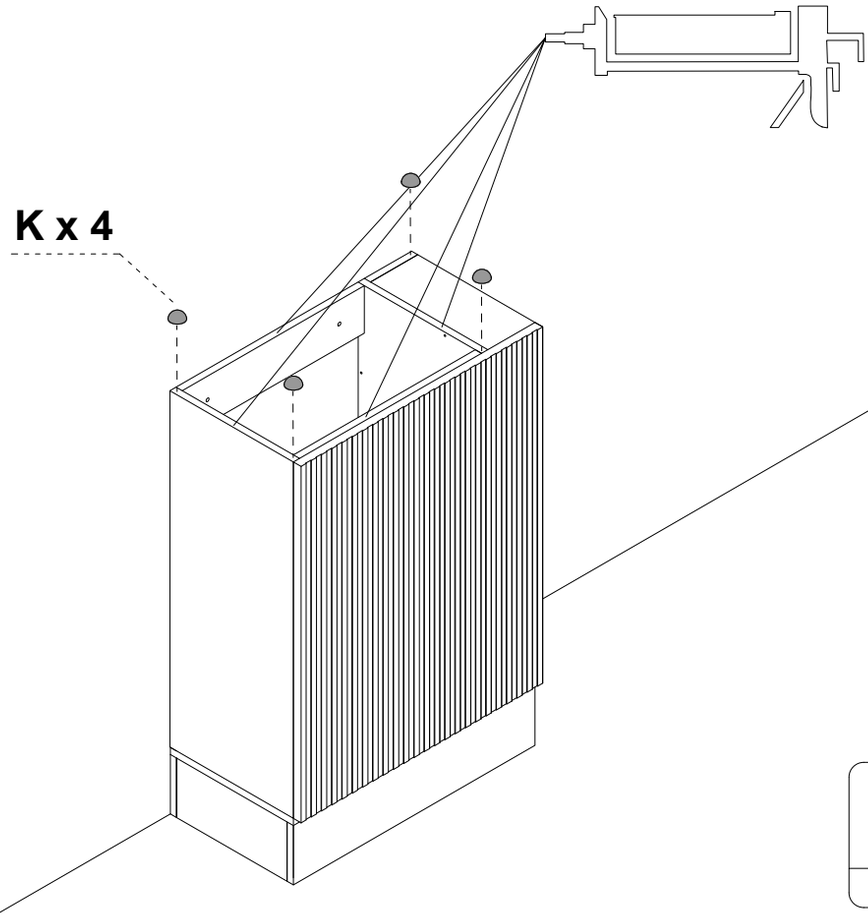

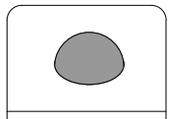

K x 4

Step 13

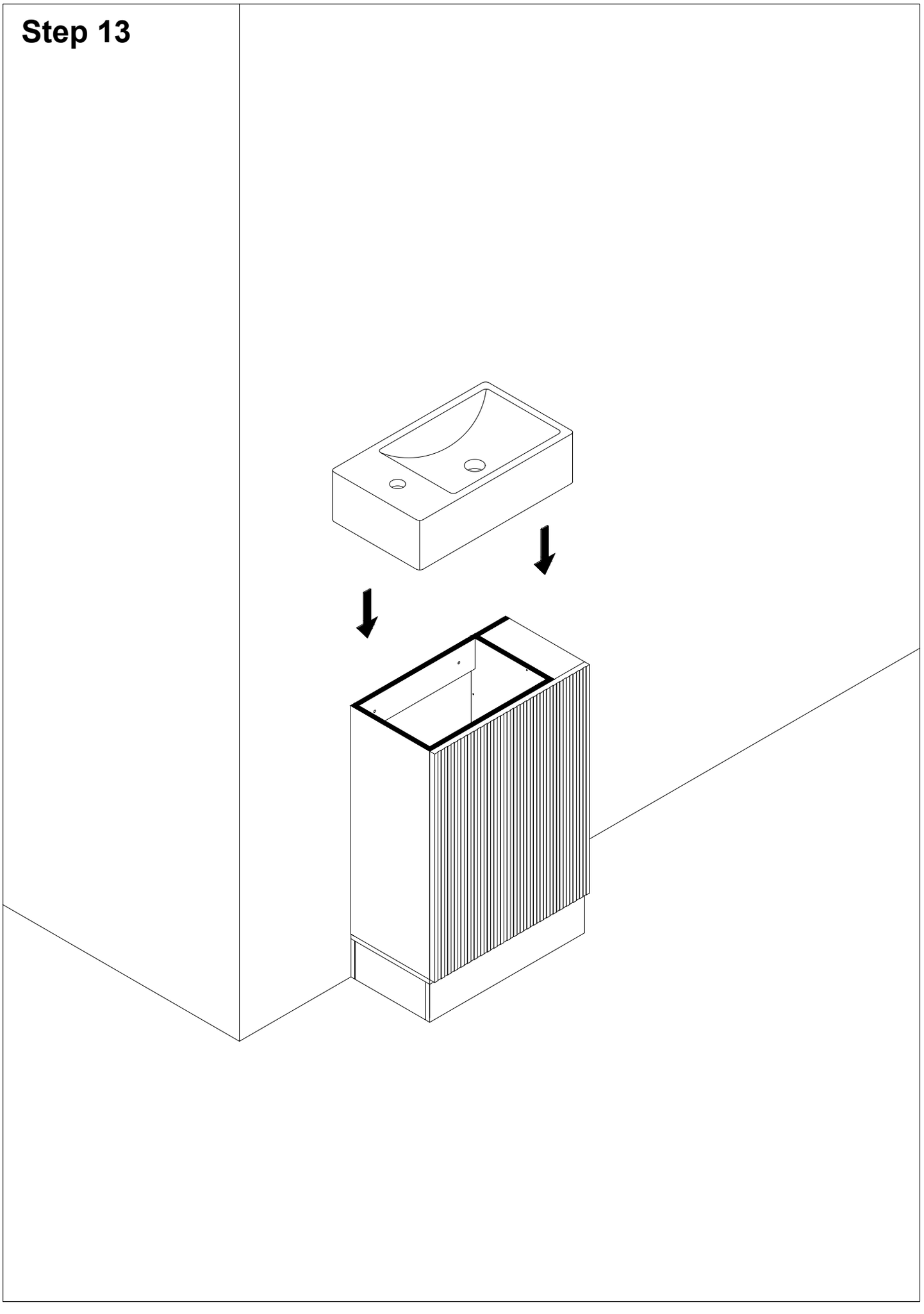

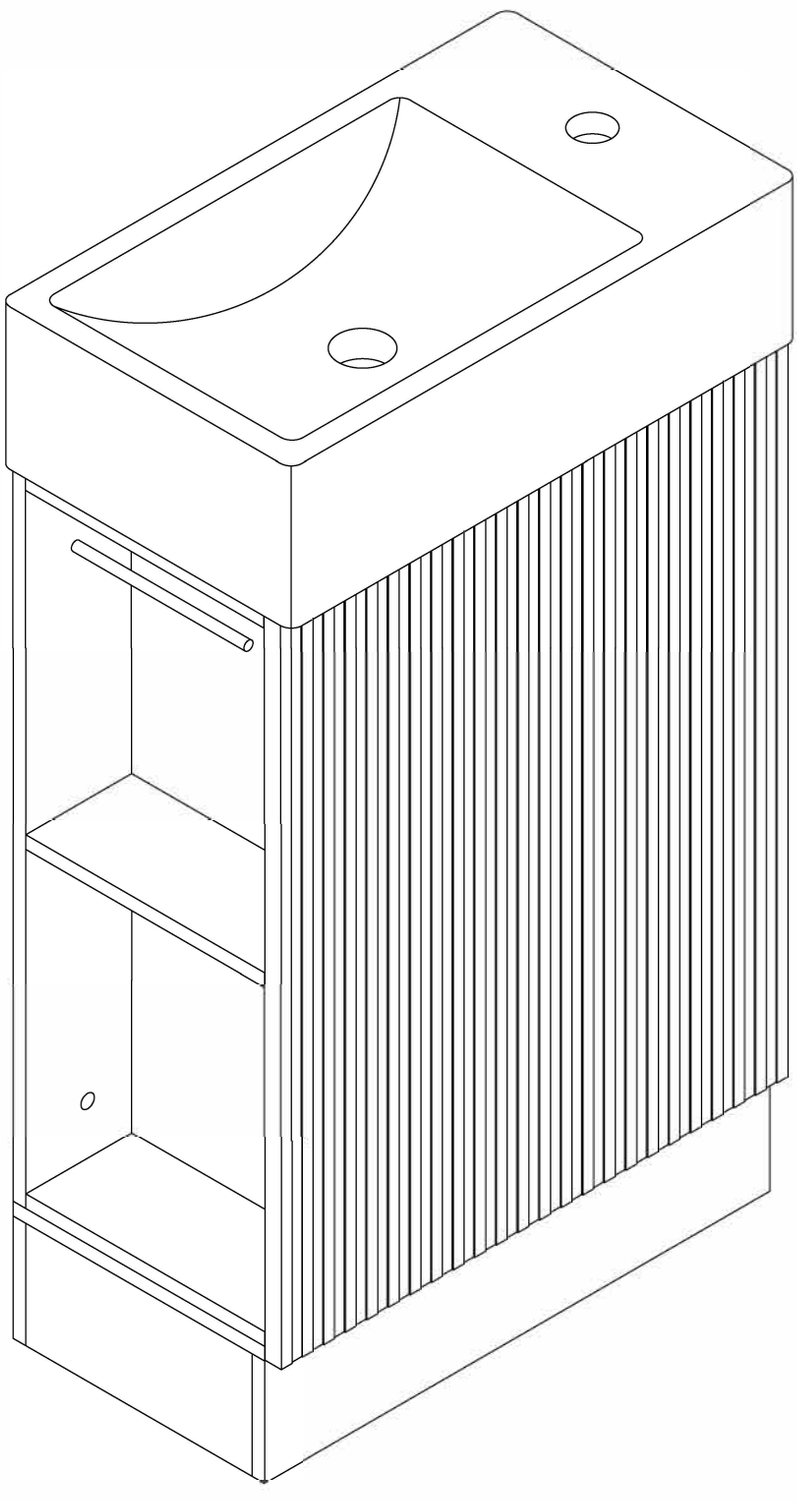

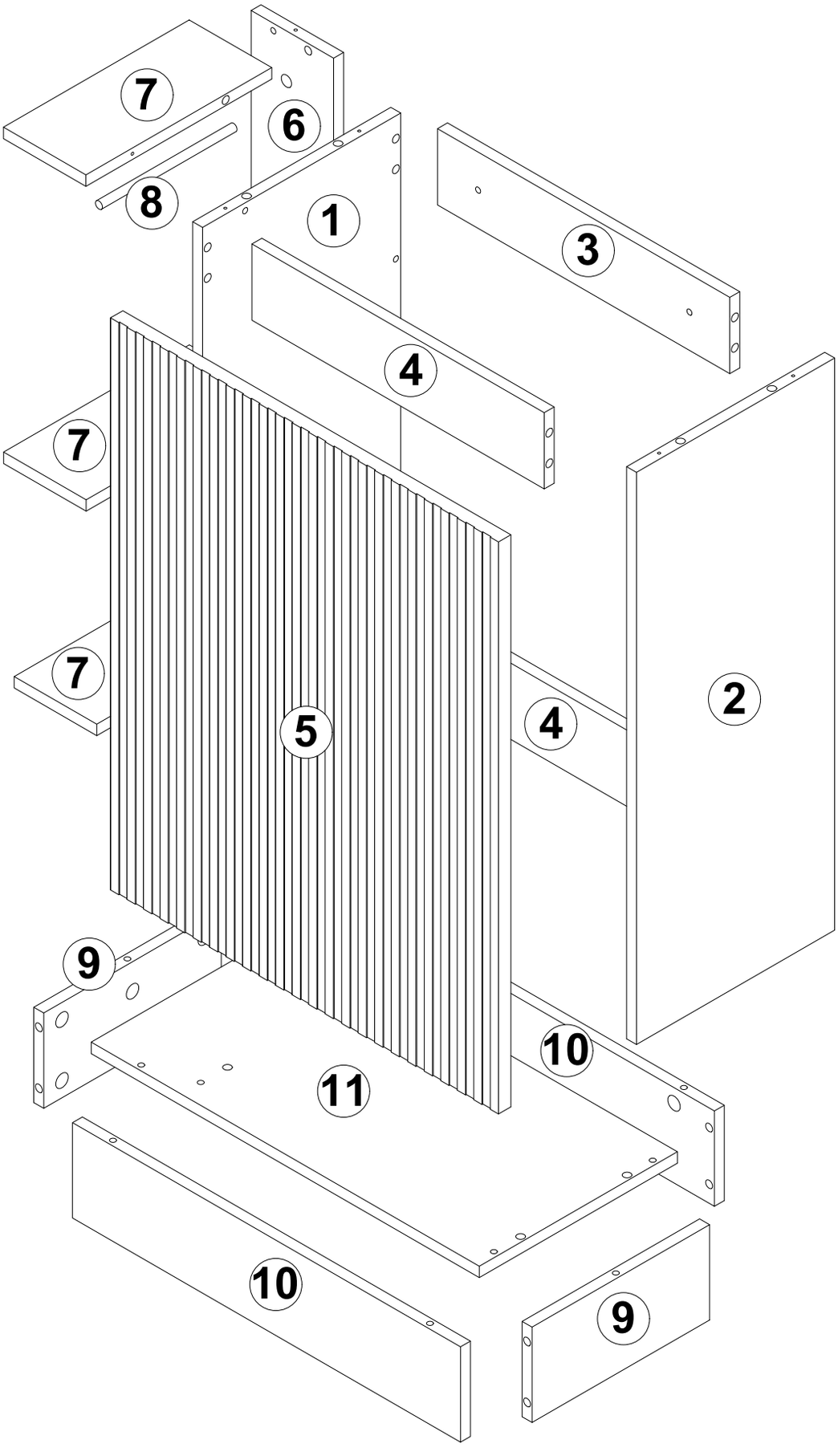
7
6
8
1
3
4
7
7
5
4
2
9
10
11
10
9

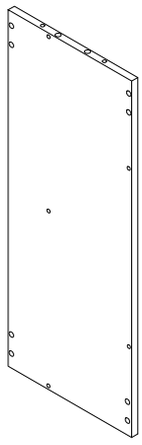	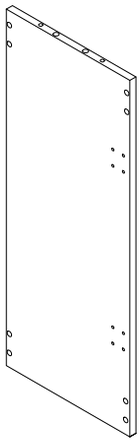	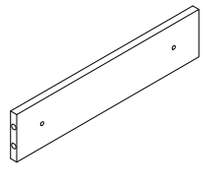	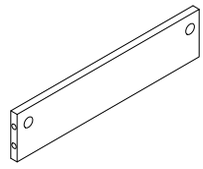
① x 1	② x 1	③ x 1	④ x 2
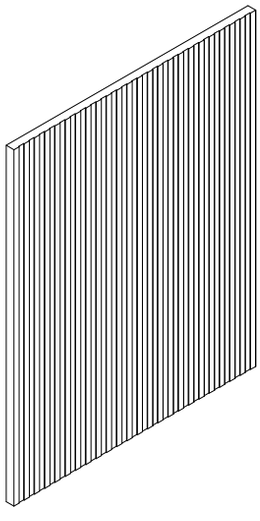	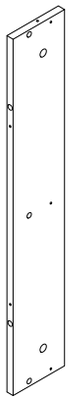	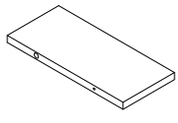	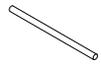
⑤ x 1	⑥ x 1	⑦ x 3	⑧ x 1
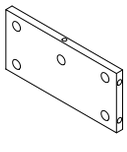	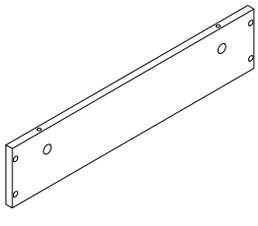	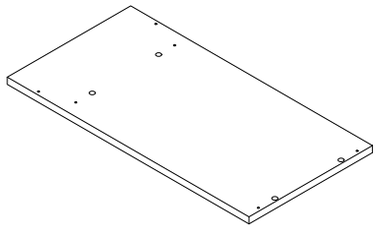	
⑨ x 2	⑩ x 2	⑪ x 1	

		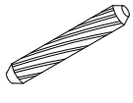	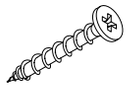		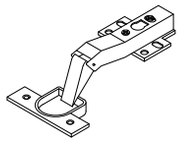
Φ6x35mm	Φ15x10mm	Φ6x30mm	Φ4x35mm	Φ3.5x12mm	
A x 20+2	B x 20+2	C x 18+1	D x 14+1	E x 12+1	F x 2
	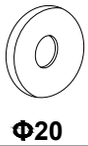	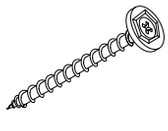		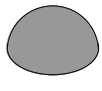	
Φ8x40mm	Φ20	Φ6x60mm			
G x 2	H x 2	I x 2	J x 1	K x 4	

Step 1

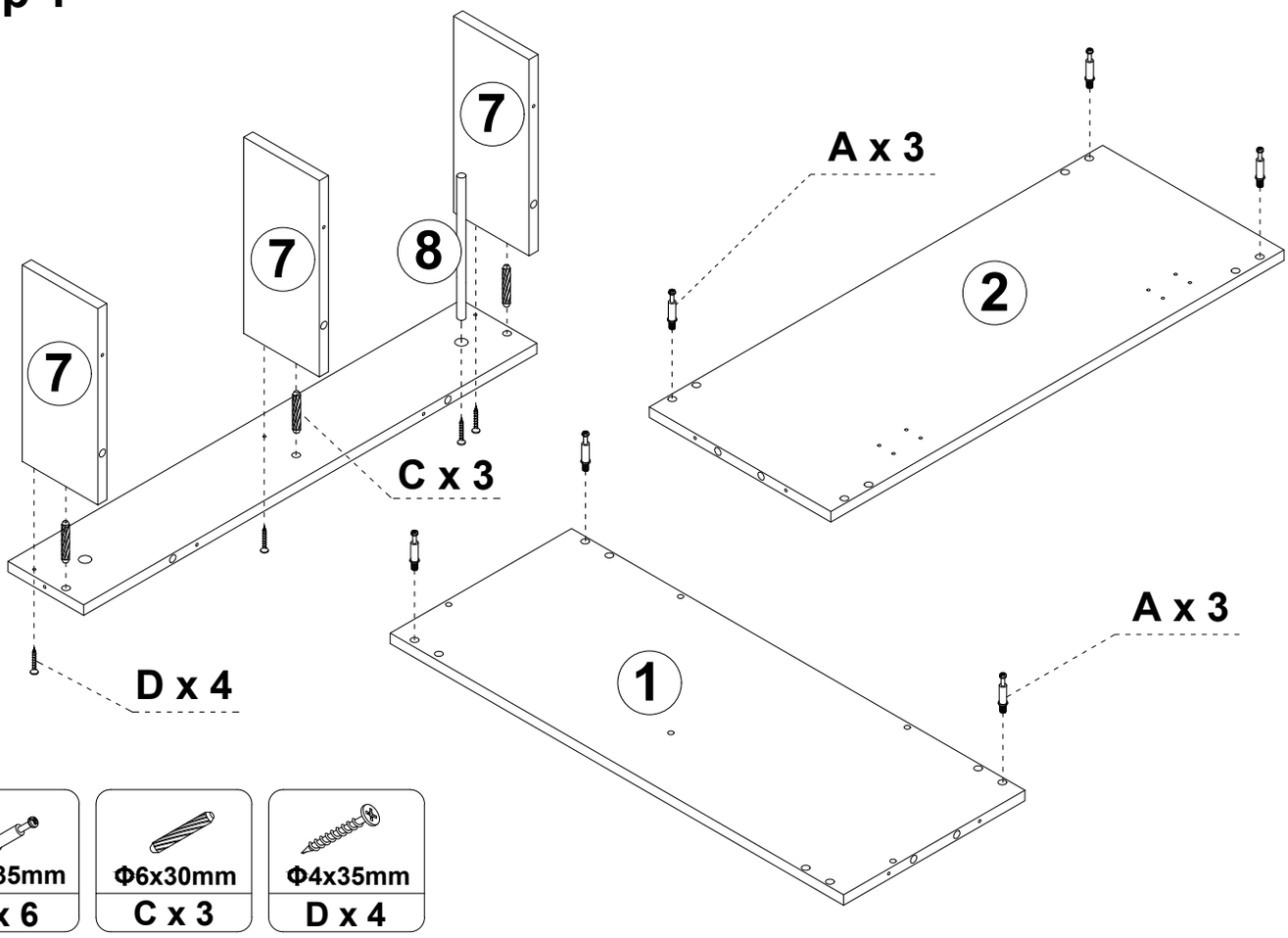

Φ6x35mm	Φ6x30mm	Φ4x35mm
A x 6	C x 3	D x 4

Step 2

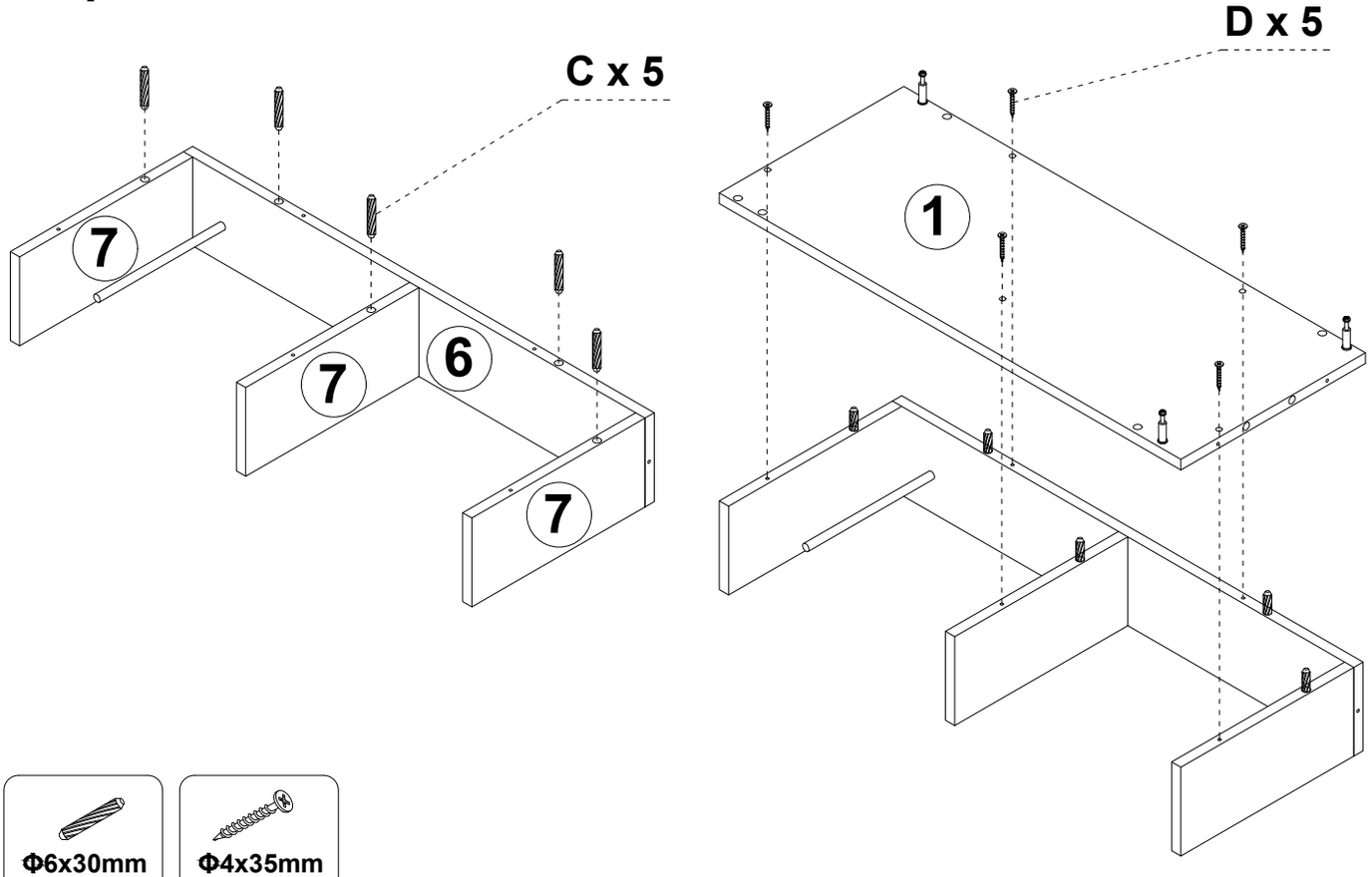

Φ6x30mm	Φ4x35mm
C x 5	D x 5

Step 3

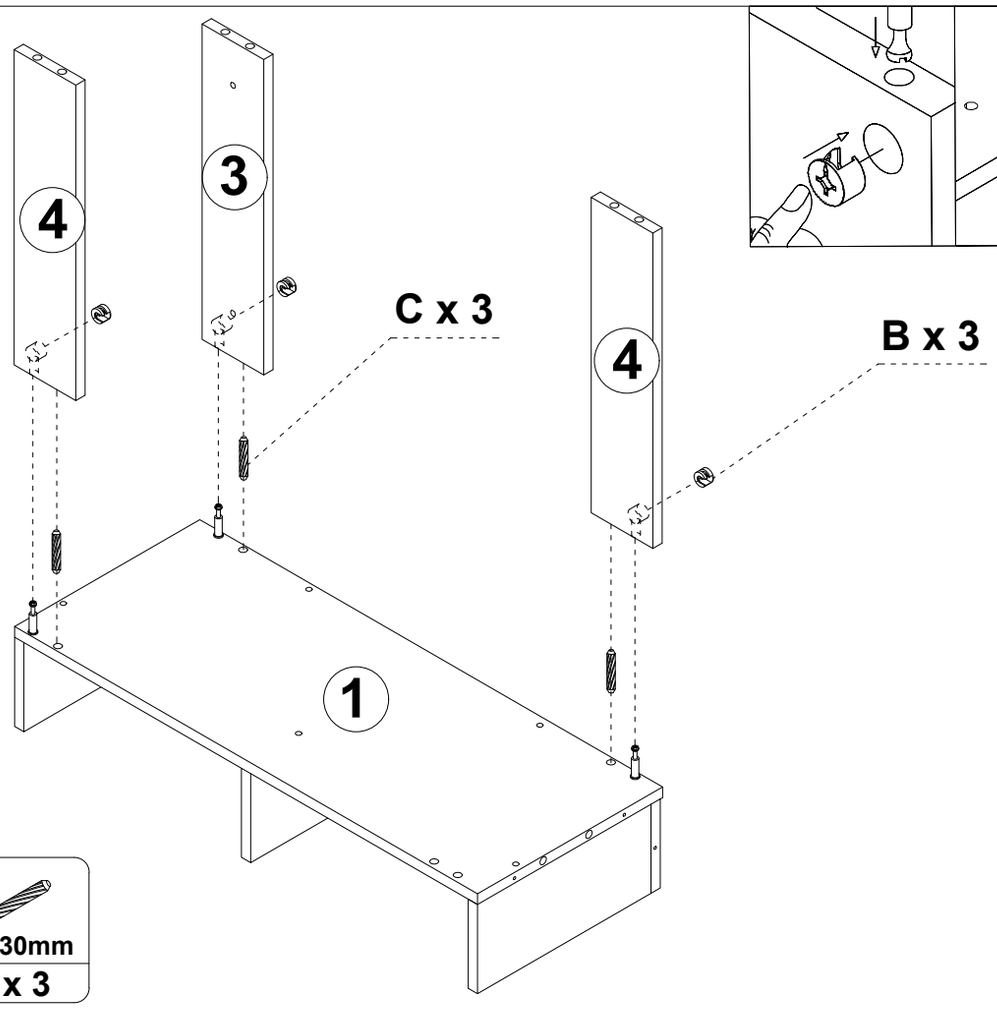

Φ15x10mm	Φ6x30mm
B x 3	C x 3

Step 4

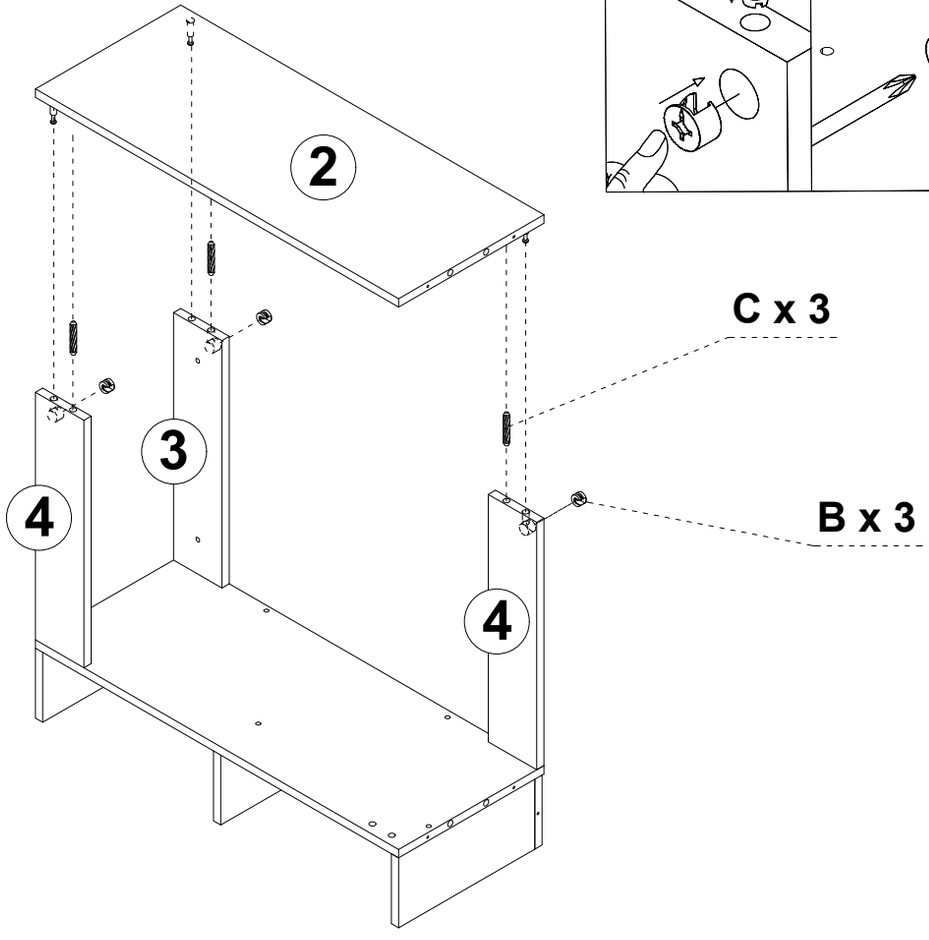

Φ15x10mm	Φ6x30mm
B x 3	C x 3

Step 5

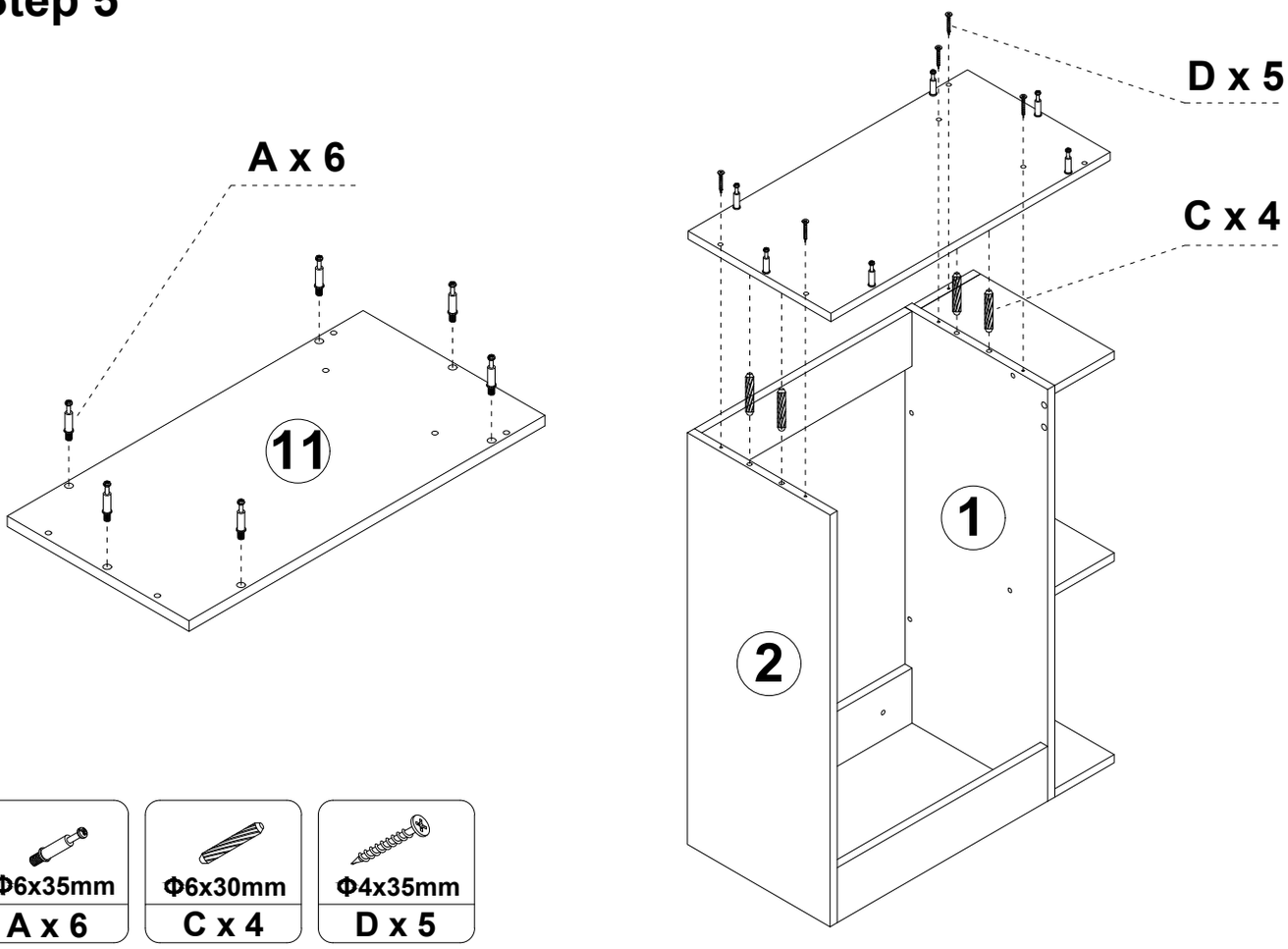

Φ6x35mm	Φ6x30mm	Φ4x35mm
A x 6	C x 4	D x 5

Step 6

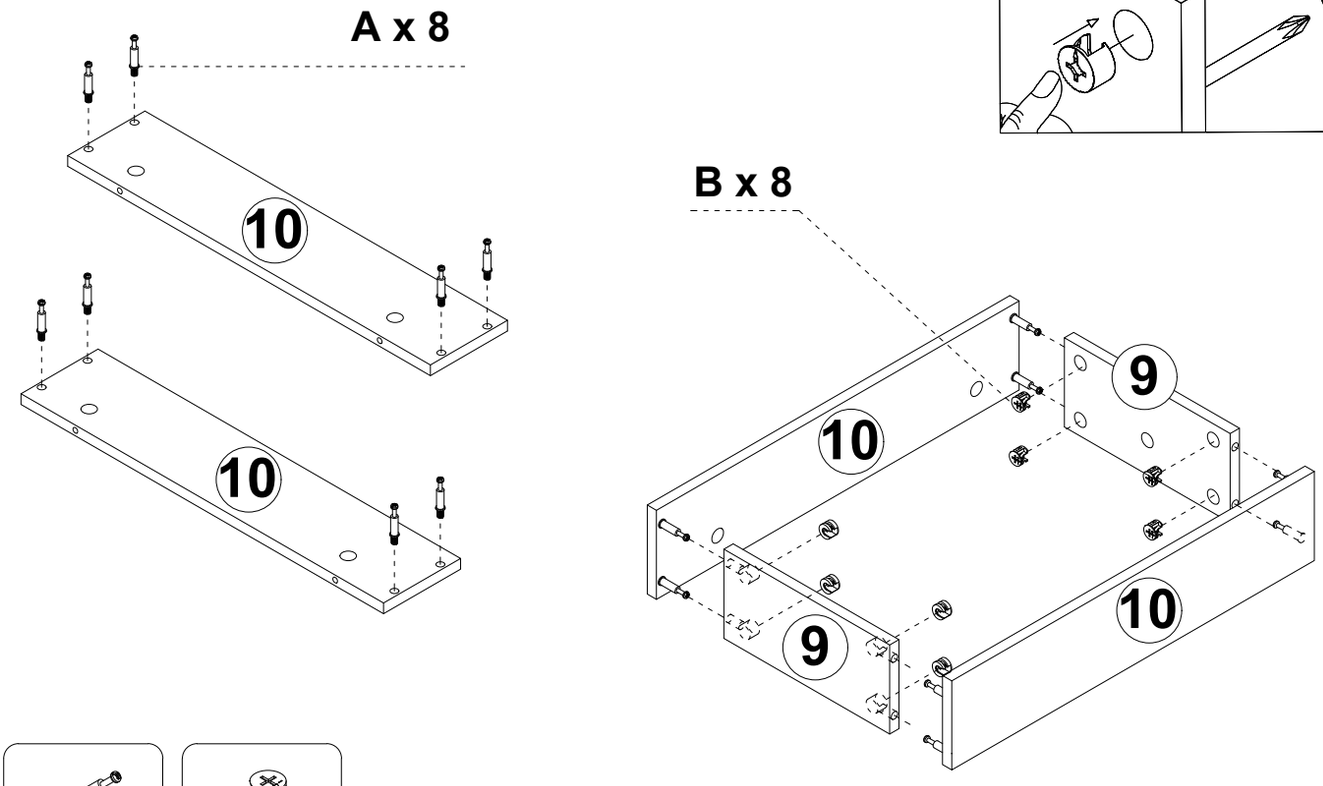

Φ6x35mm	Φ15x10mm
A x 8	B x 8

Step 7

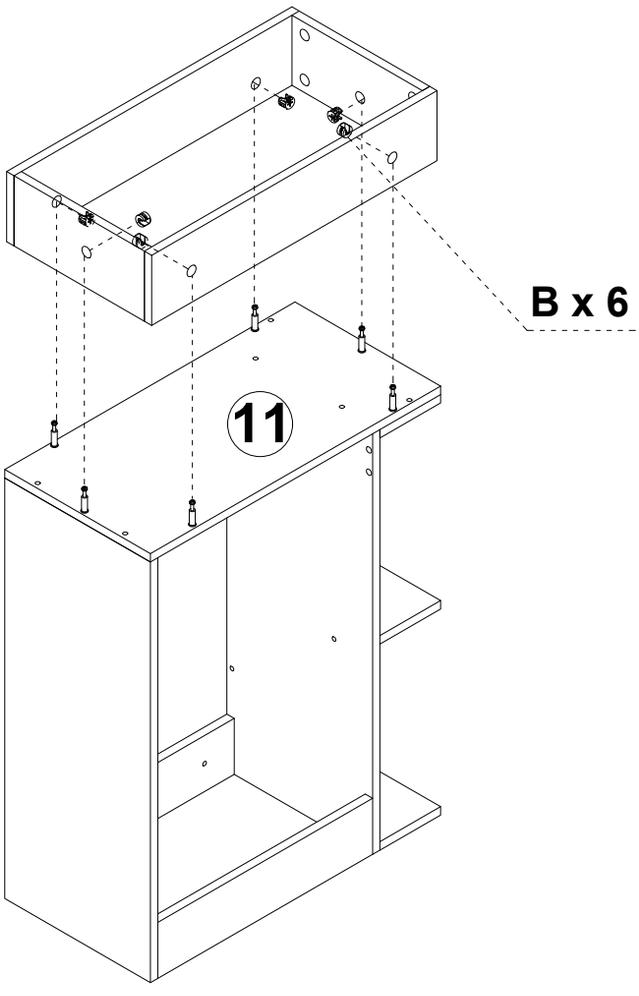

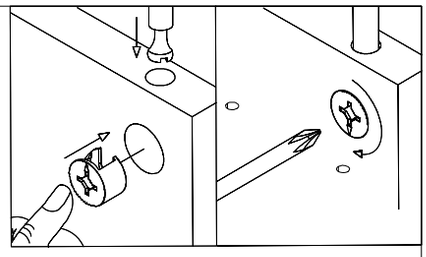



Φ15x10mm

B x 6

Step 8

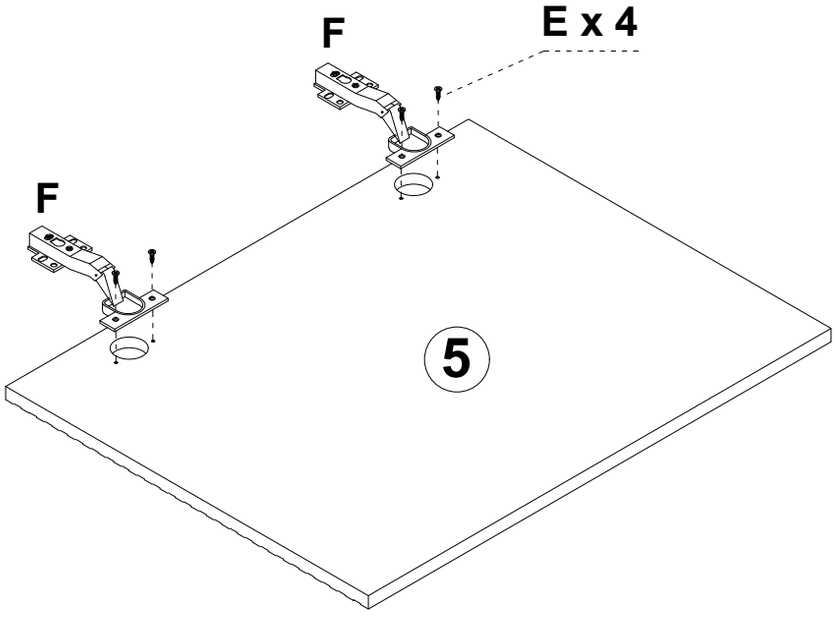



Φ3.5x12mm

E x 4

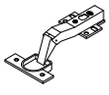

F x 2

Step 9

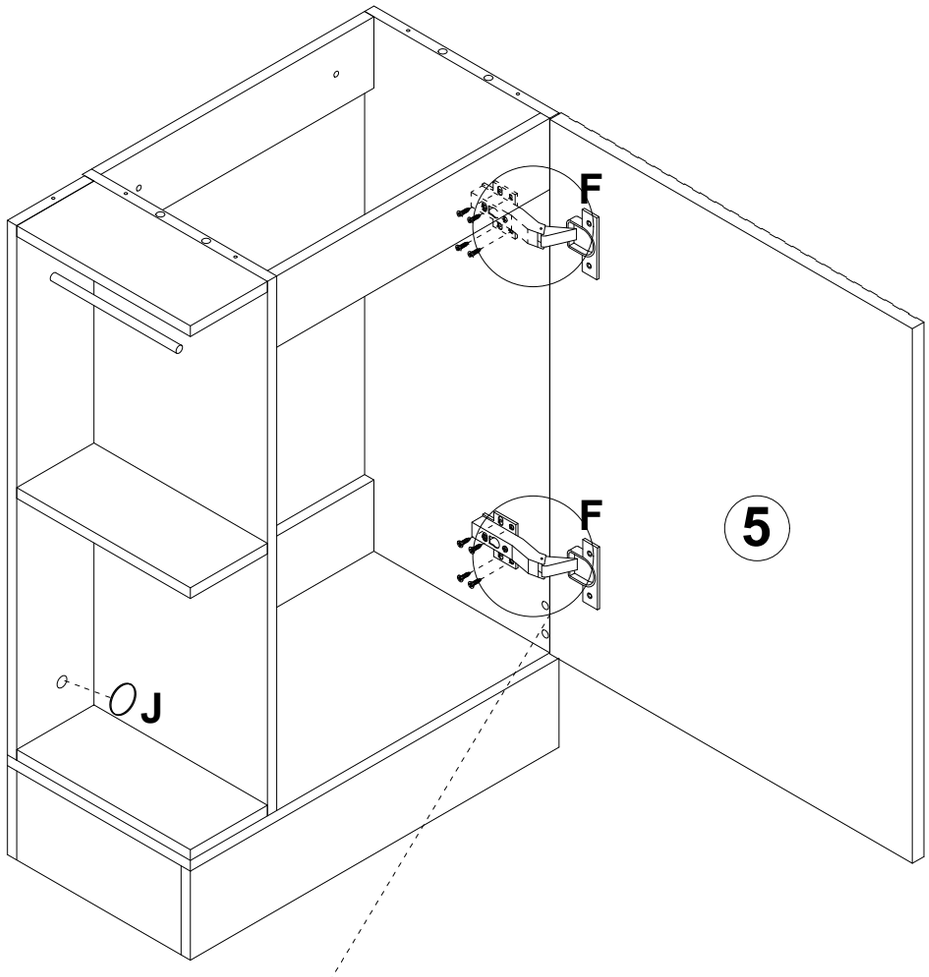

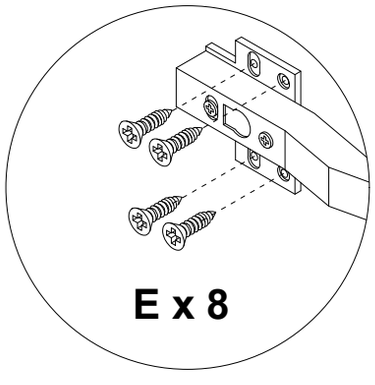

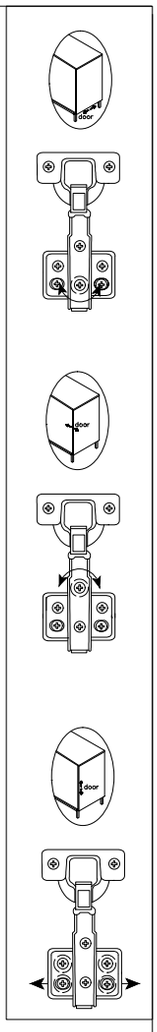

Φ3.5x12mm	O
E x 8	J x 1

Step 10

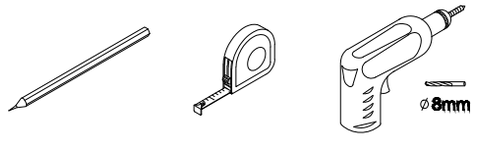

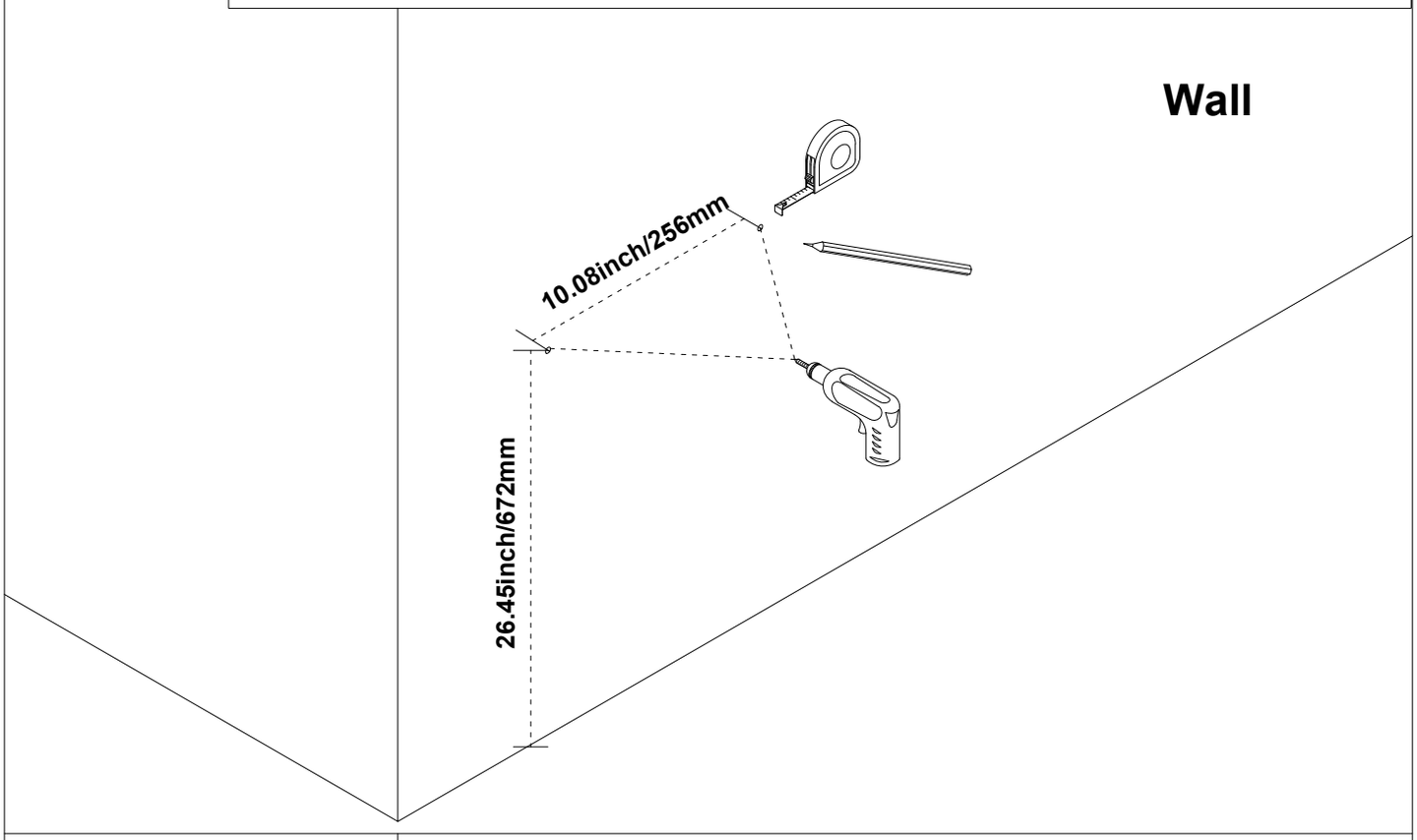

Step 11

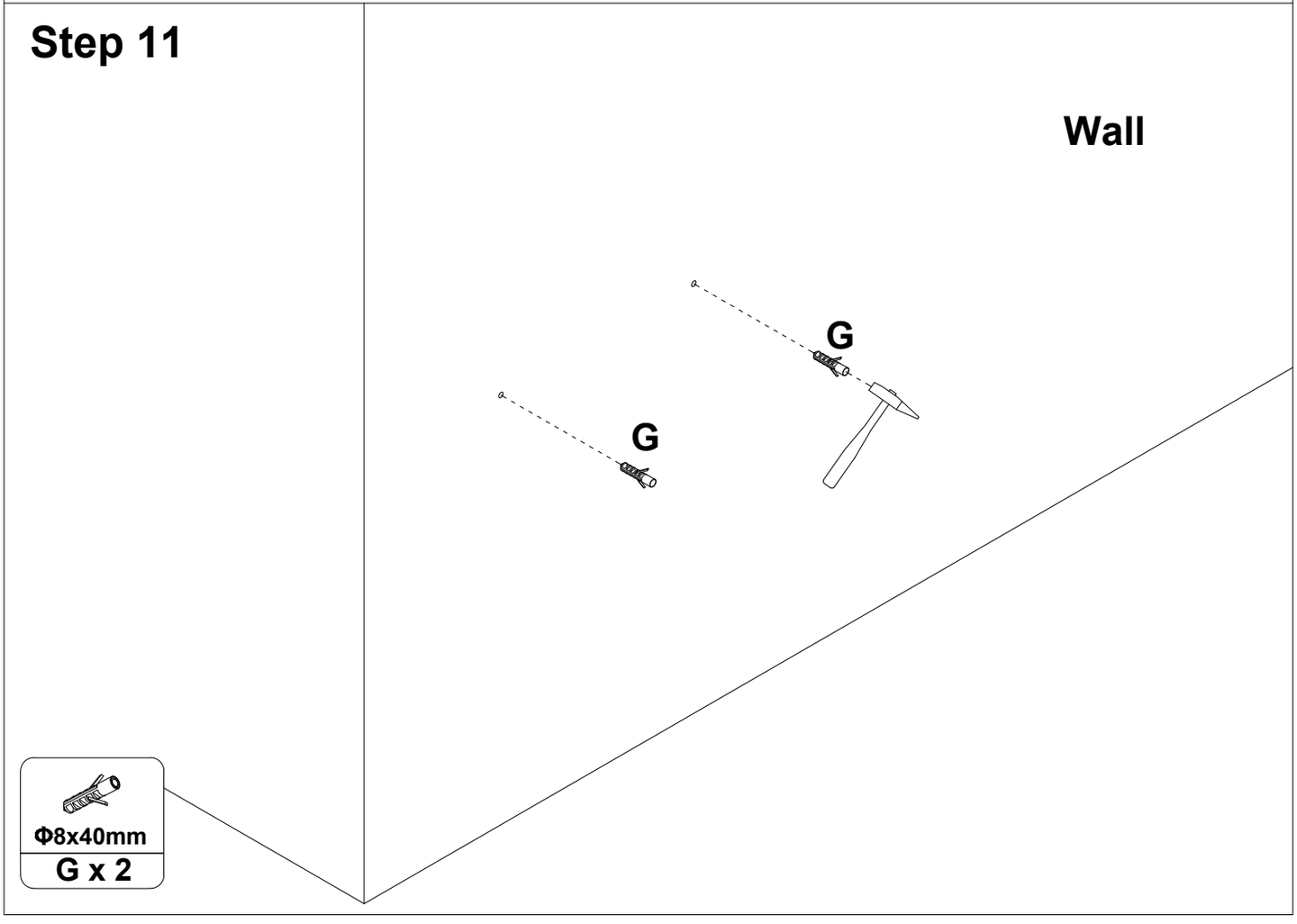

Step 12

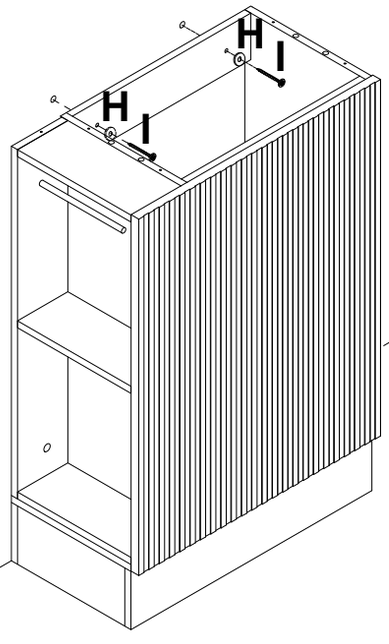





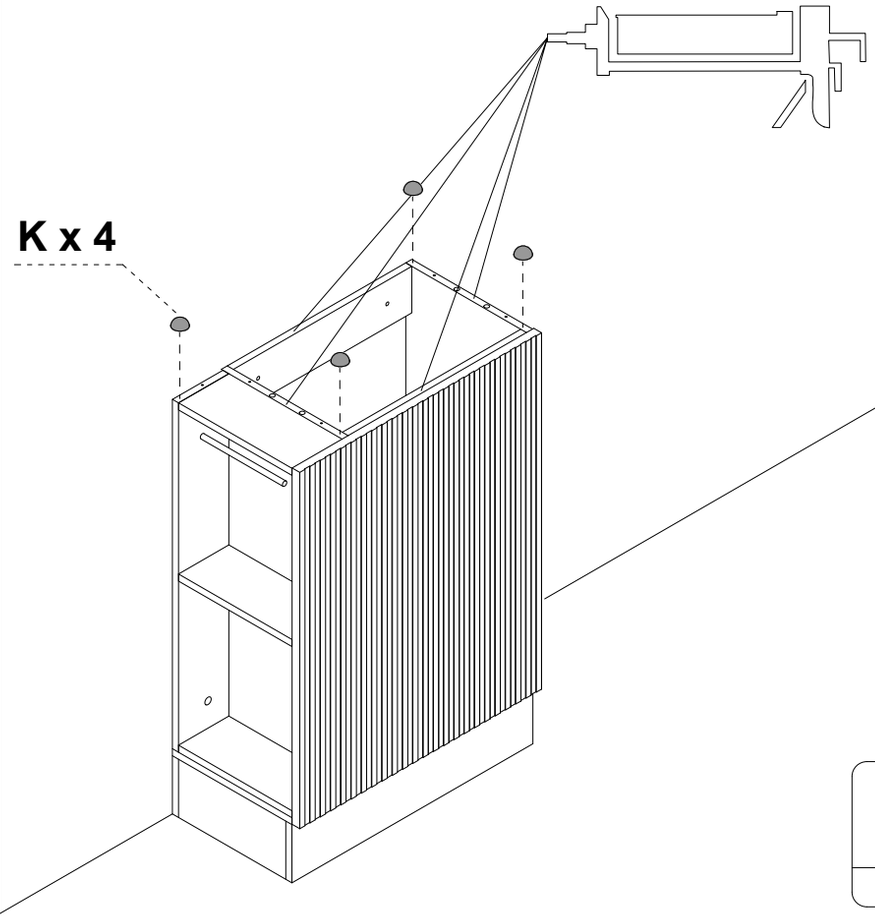

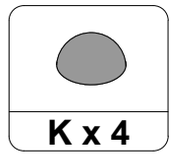

Step 13

