ASSEMBLY INSTRUCTION

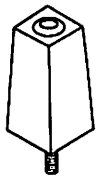
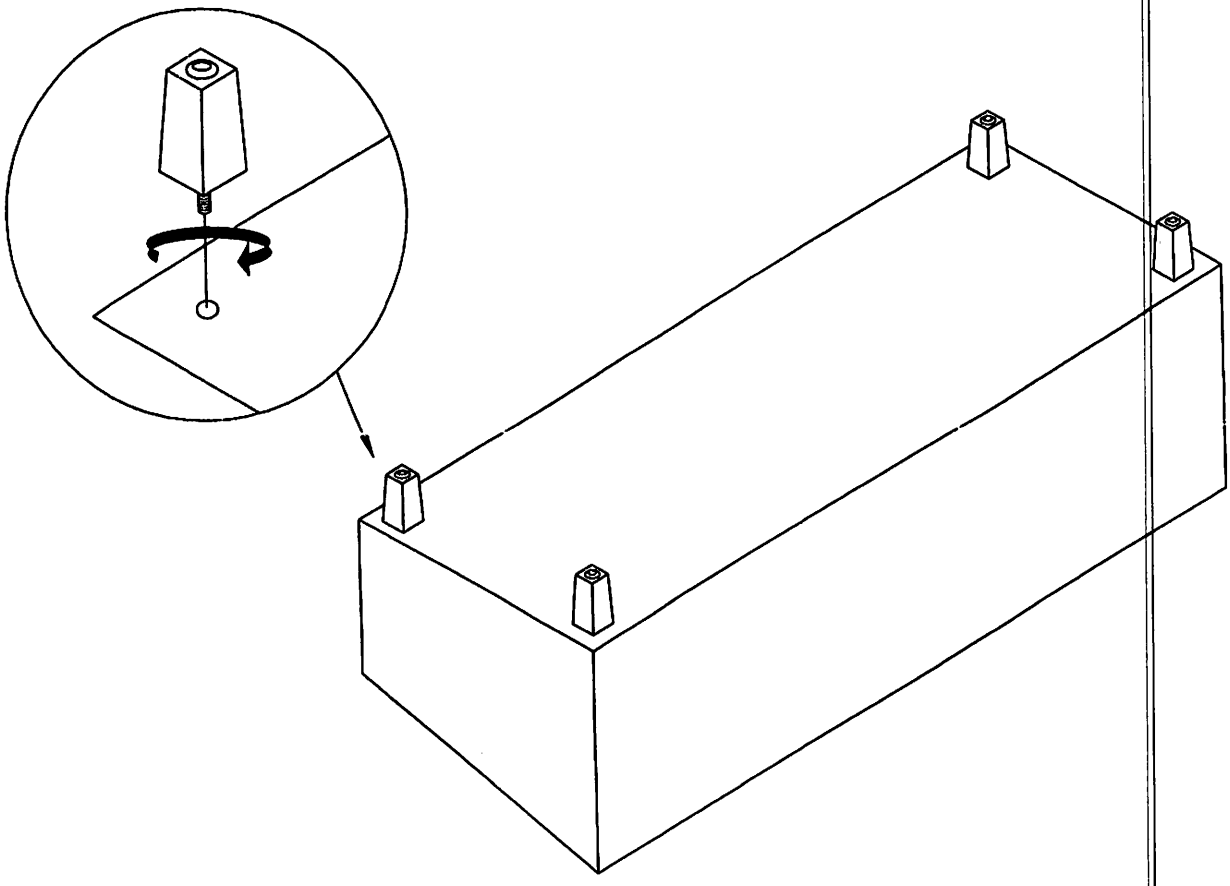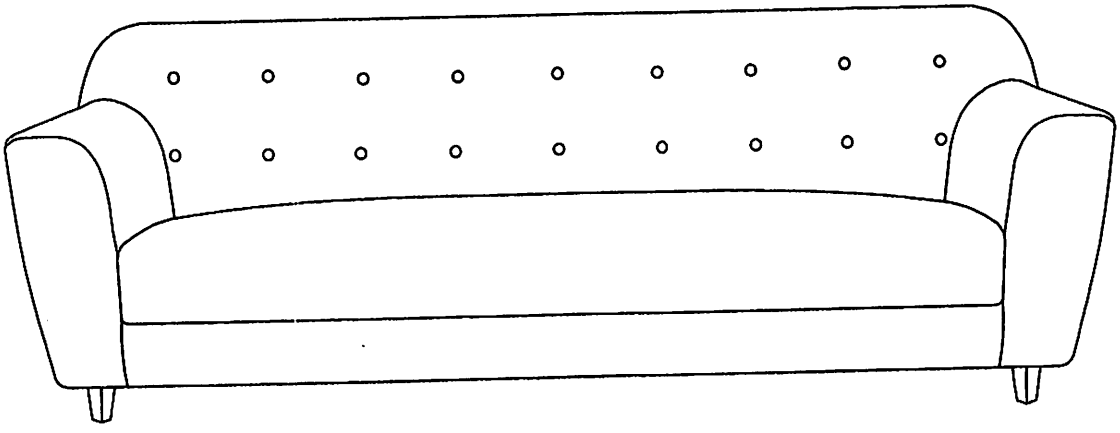
A*4