M6011

Installation Steps

LaiFug

CAT VILLA-CABINET



Installation Video

- It is recommended to use electric drill to install.
- As the product is shipped long distance, it may cause missing accessories or damages to the plate.
- If there are any problems, you can contact us for a replacement through the contact information on the last page.

Contents of the package

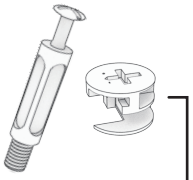

47 pcs

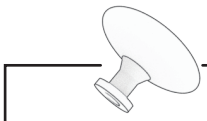

01 pcs

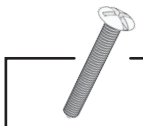

01 pcs

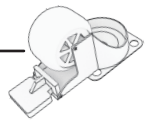

04pcs

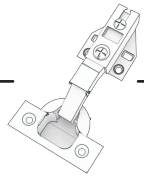

02pcs

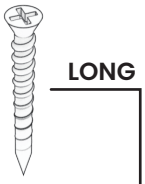

03pcs



01 pcs



01 pcs

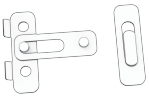

01 pcs



01 pcs



42pcs

Part number

#01 Roof



#02 Bottom Plate

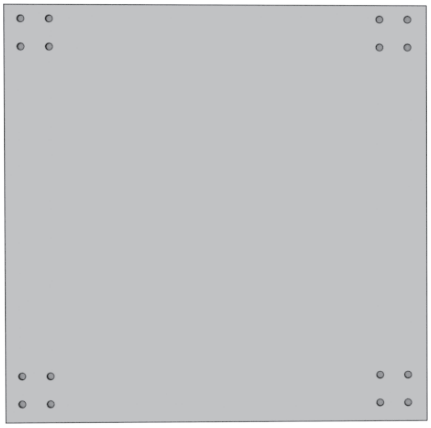

#03 Left Side Panel

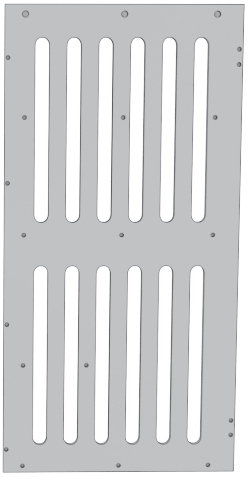

#04 Right Side Panel

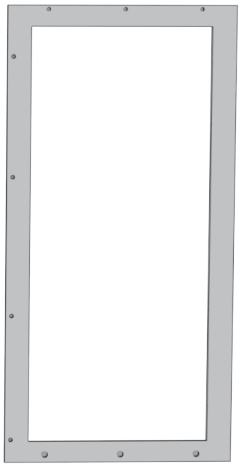

#05 Backplane

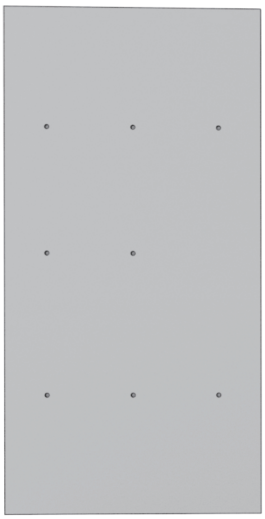

#06 Door

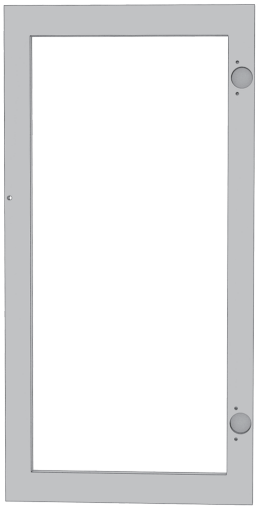

#07 Kitten Head

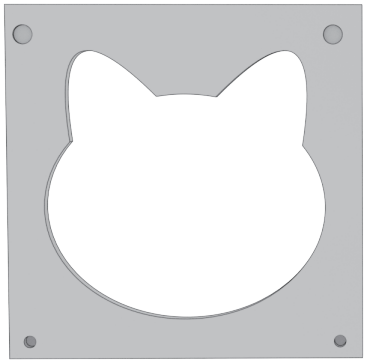

#08 Lengthened Cat Head Plate



#09 Curved Platform

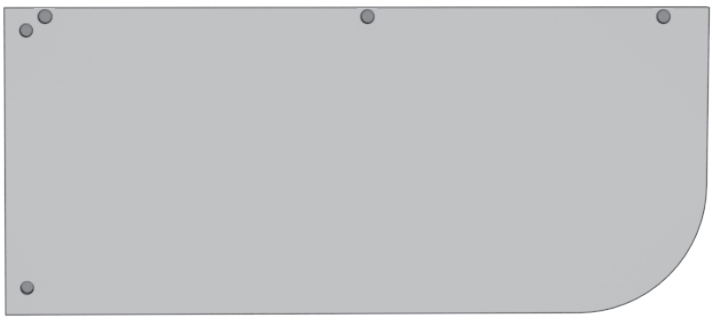

#10 Irregular Partitions

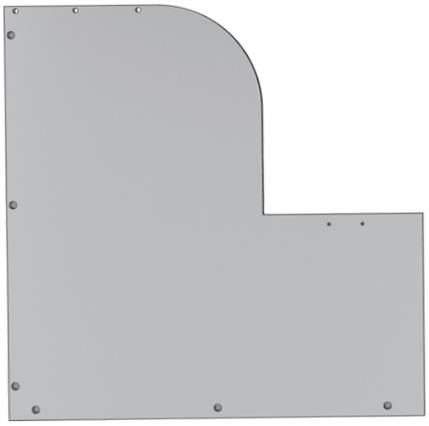

Stair



Guardrail

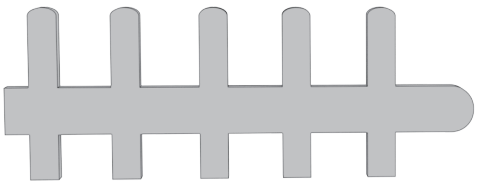

Specific steps

STEP

1

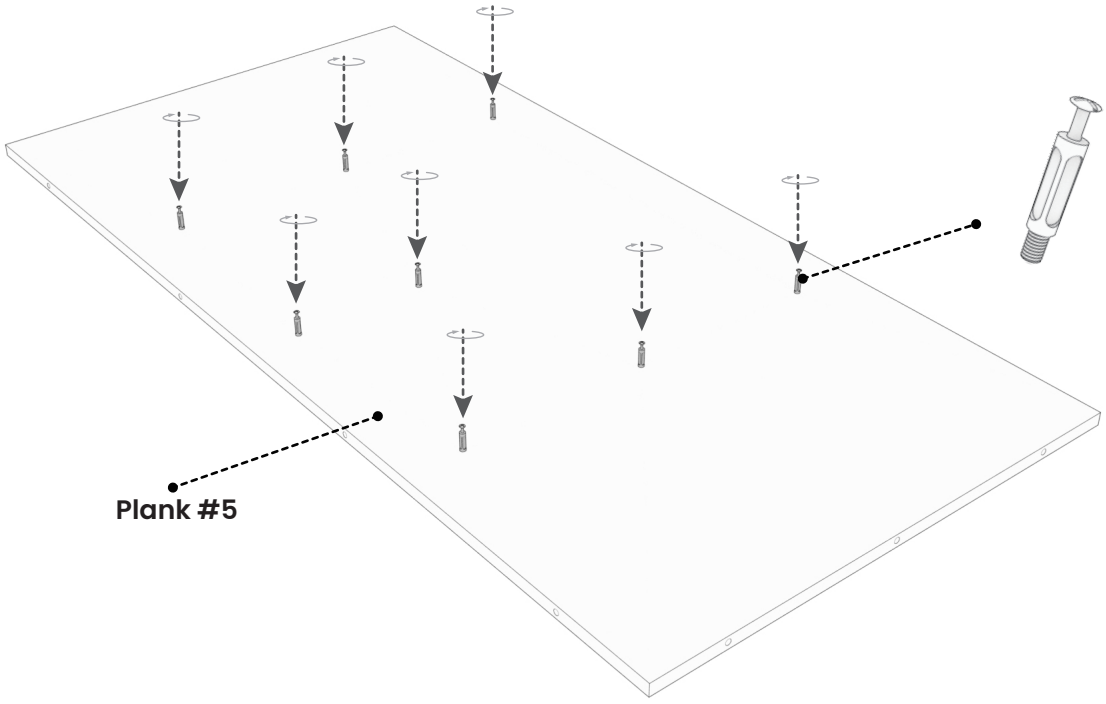

STEP

2

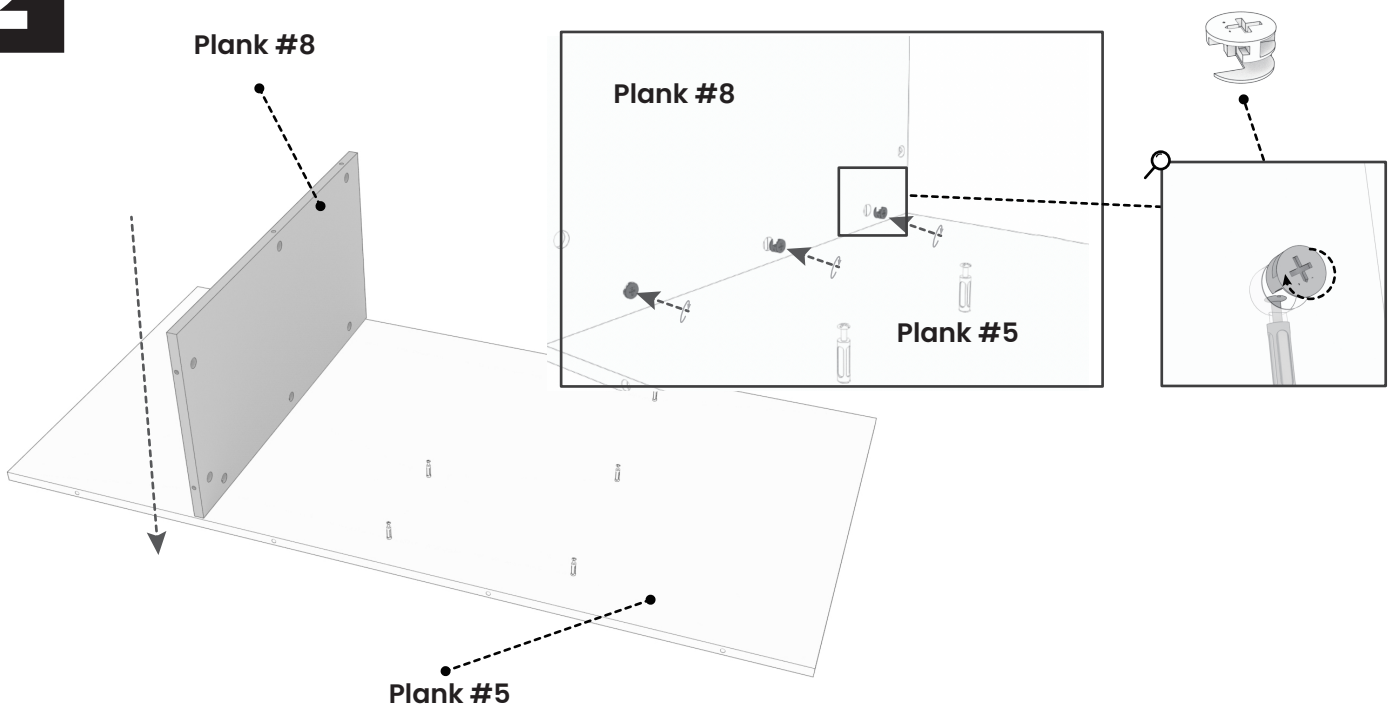

STEP 3

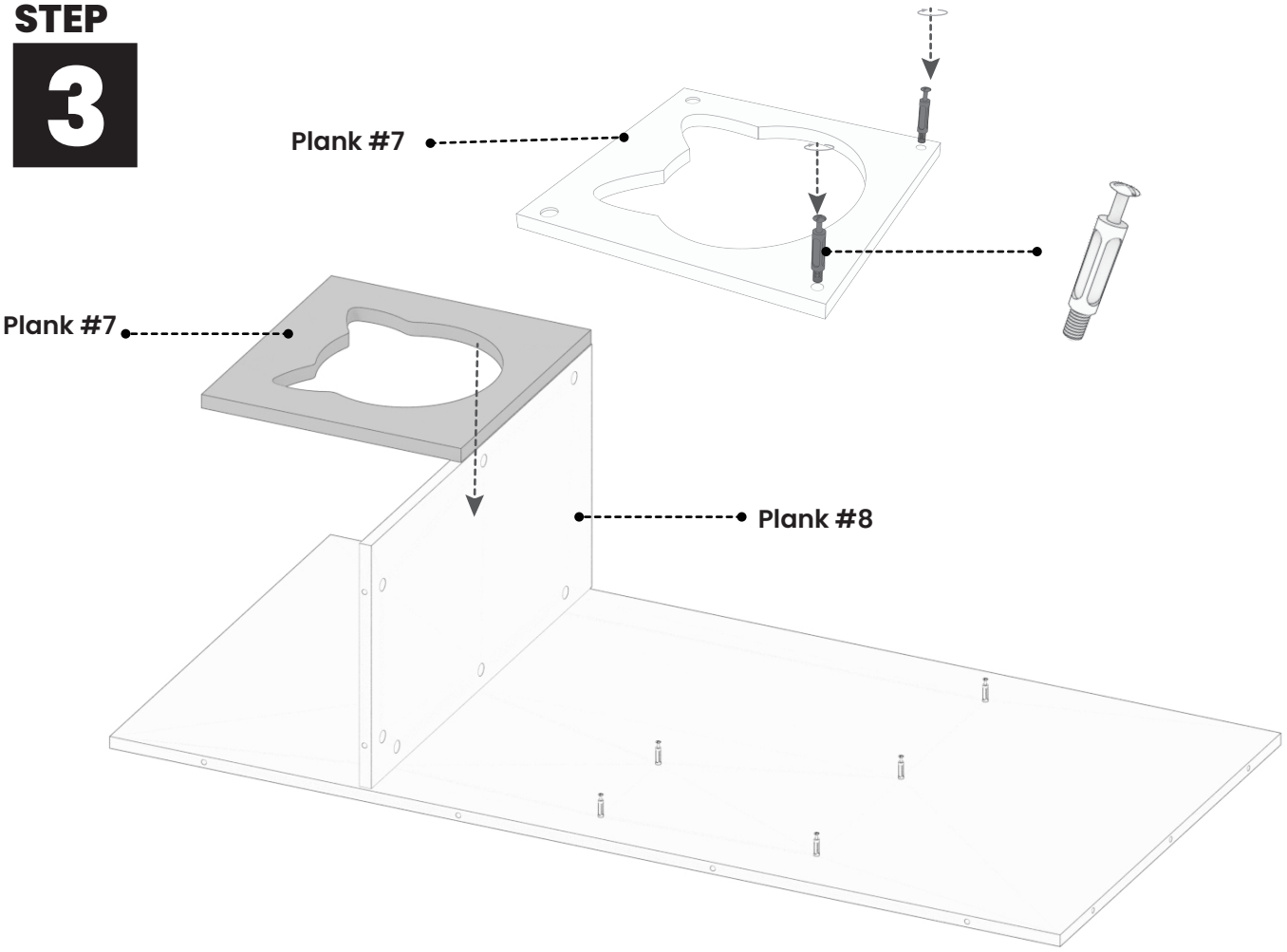

STEP 4

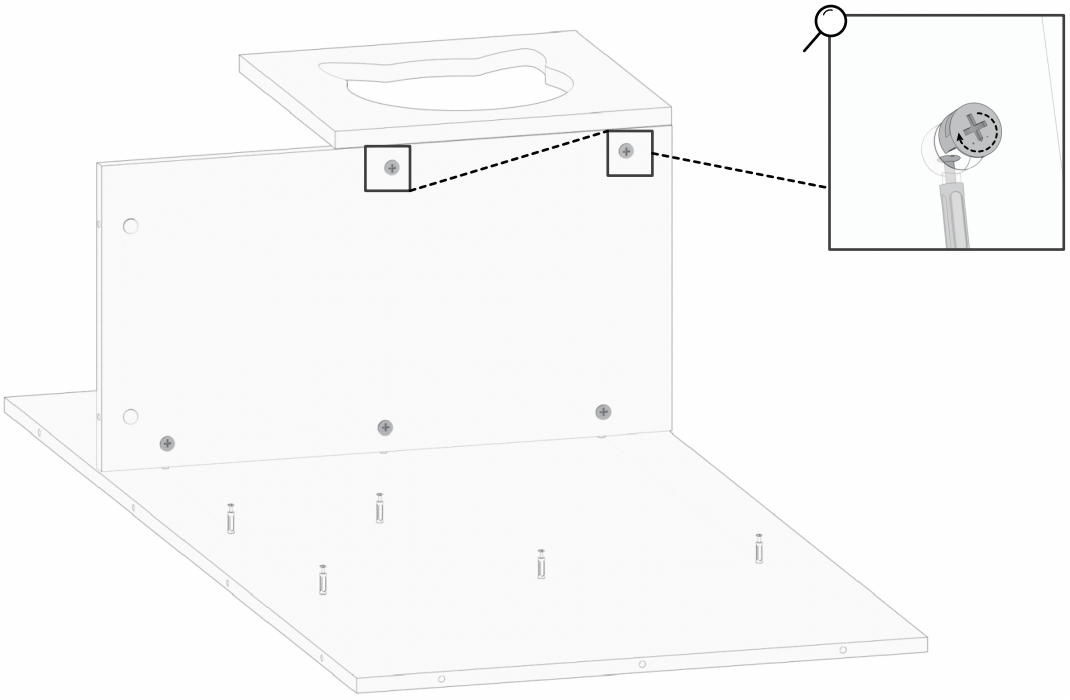

STEP

5

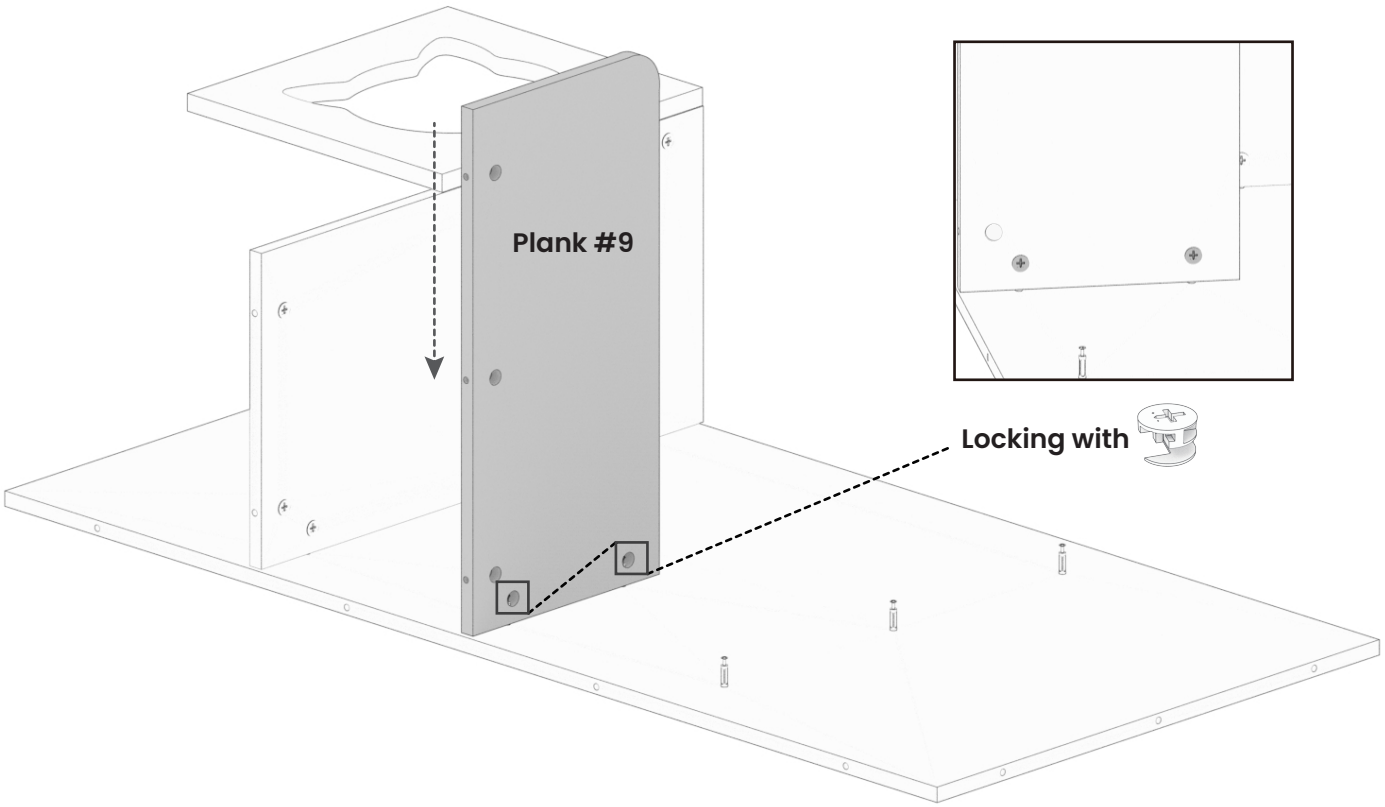

STEP

6

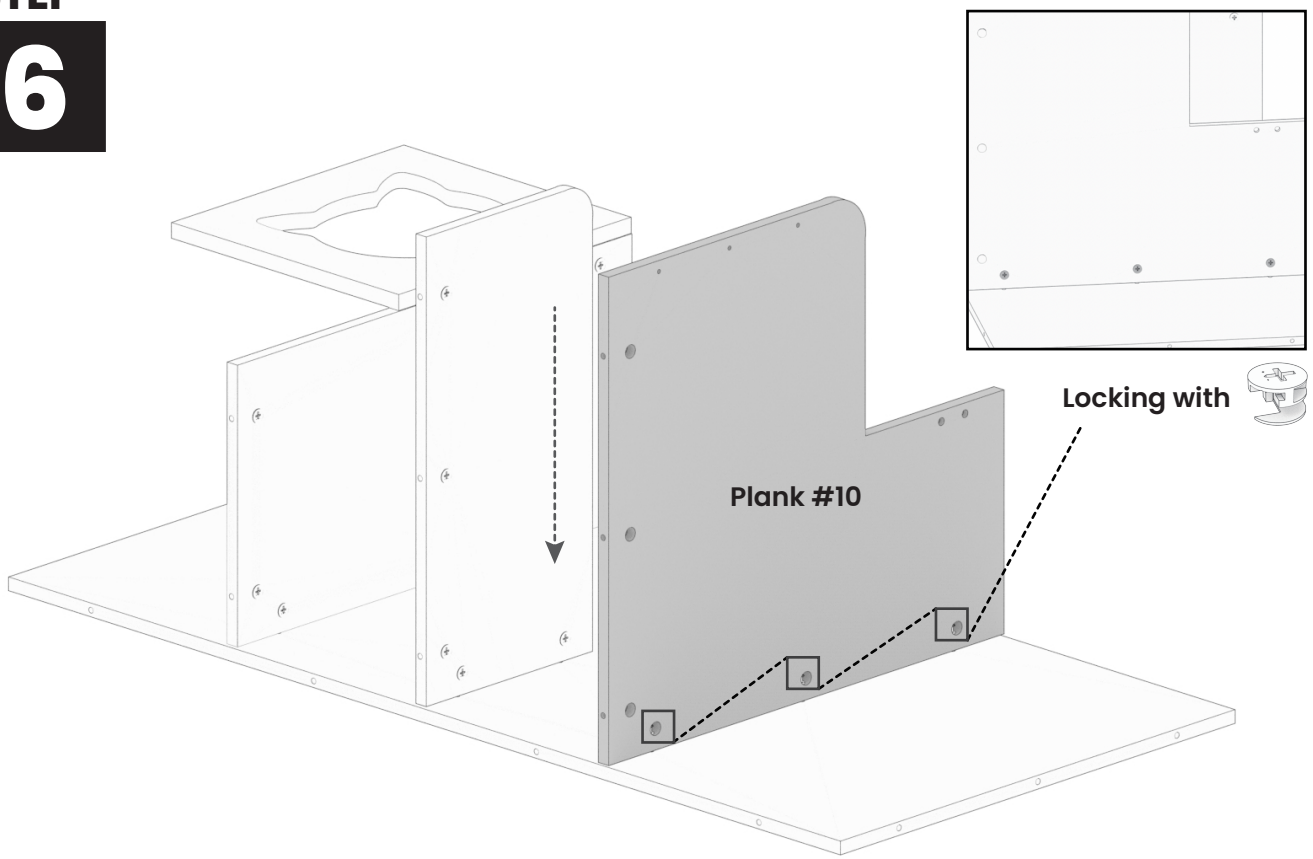

STEP 7

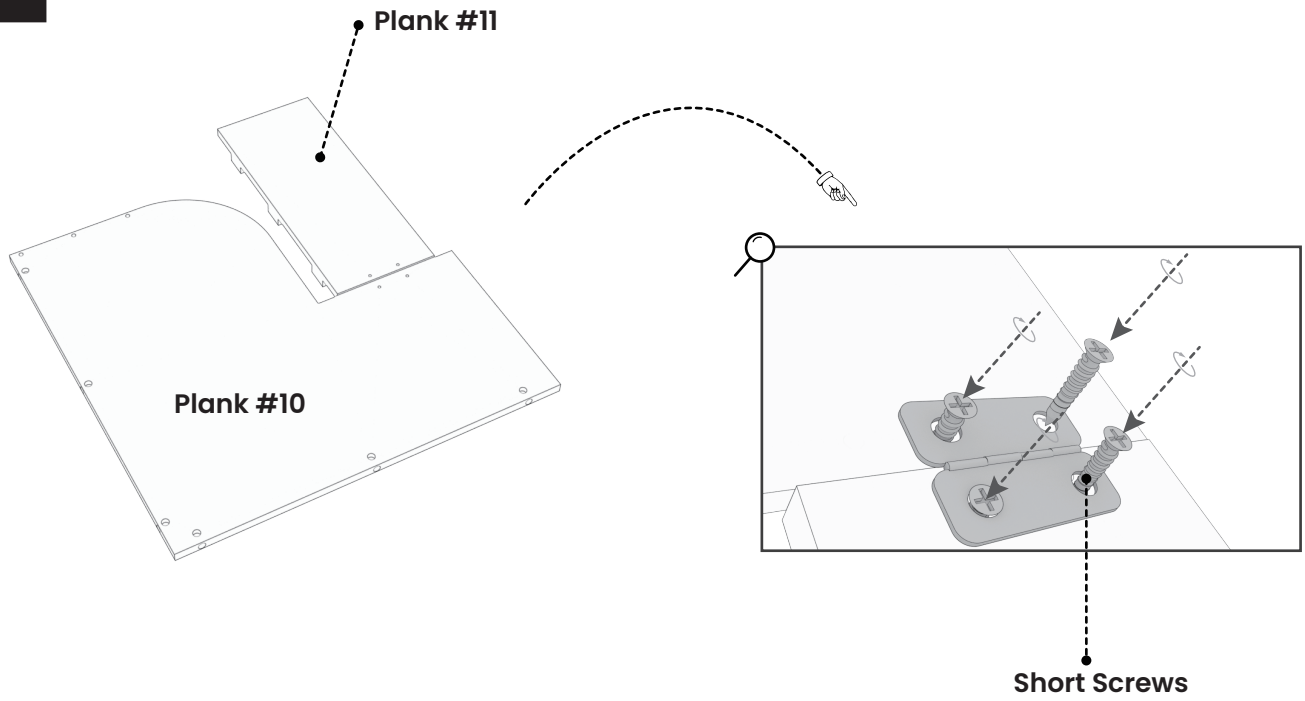

STEP 8

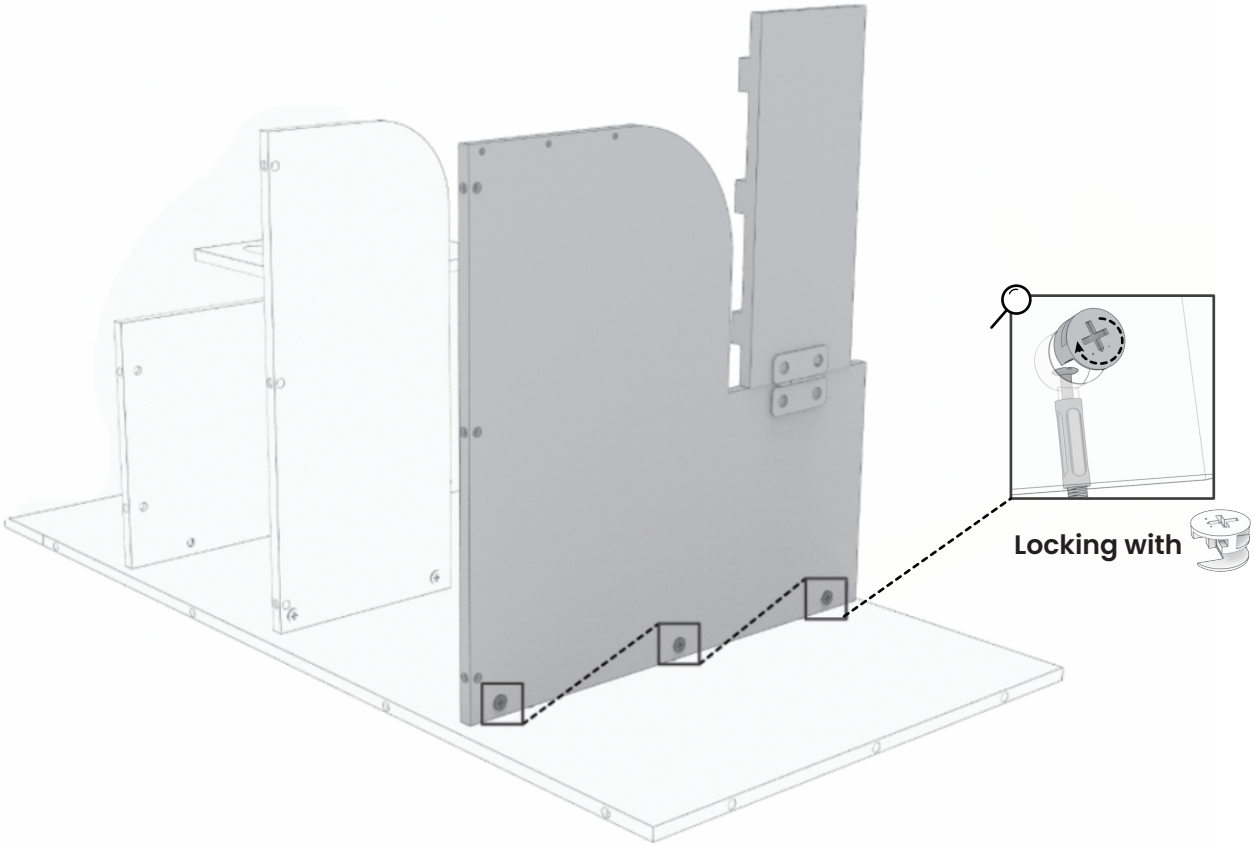

STEP

9

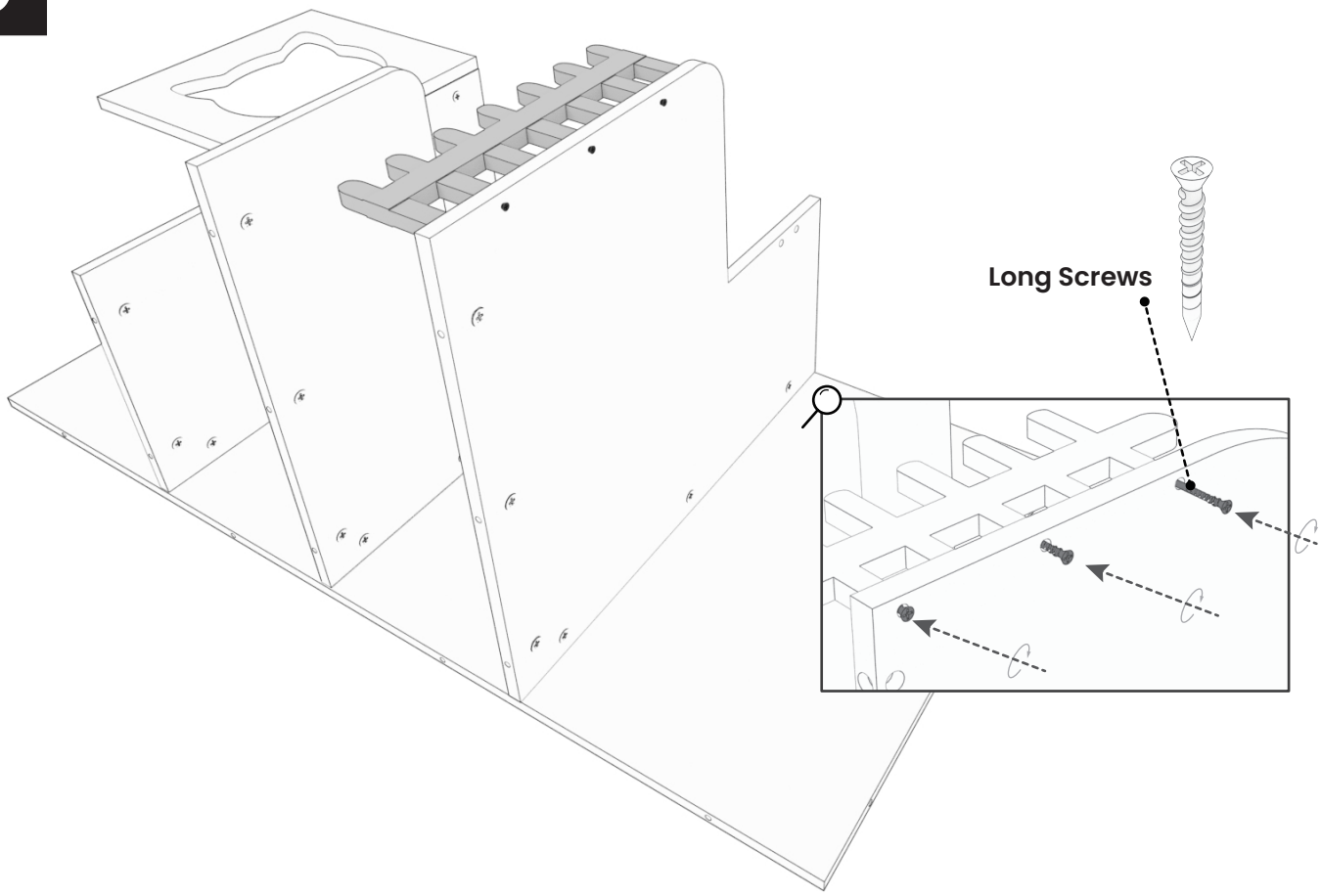

STEP

10

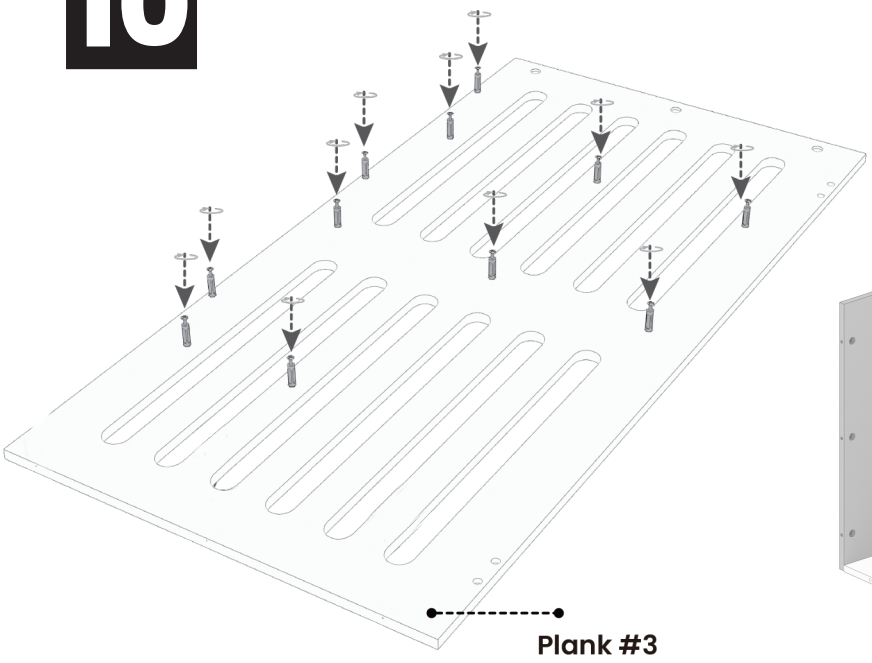

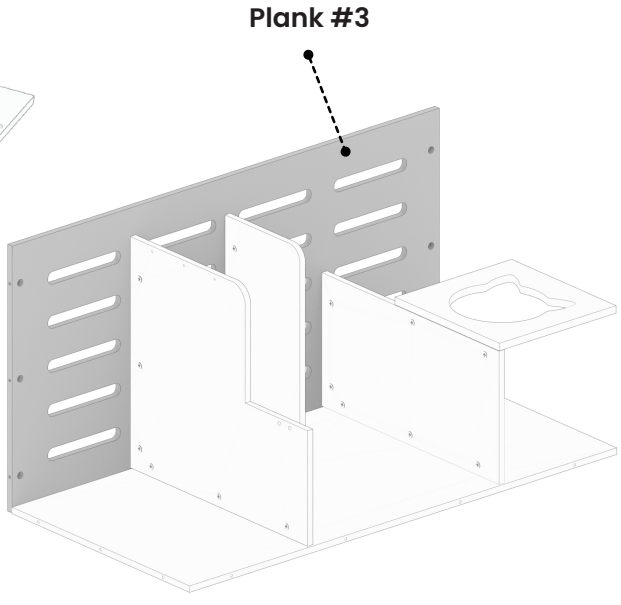

STEP

11

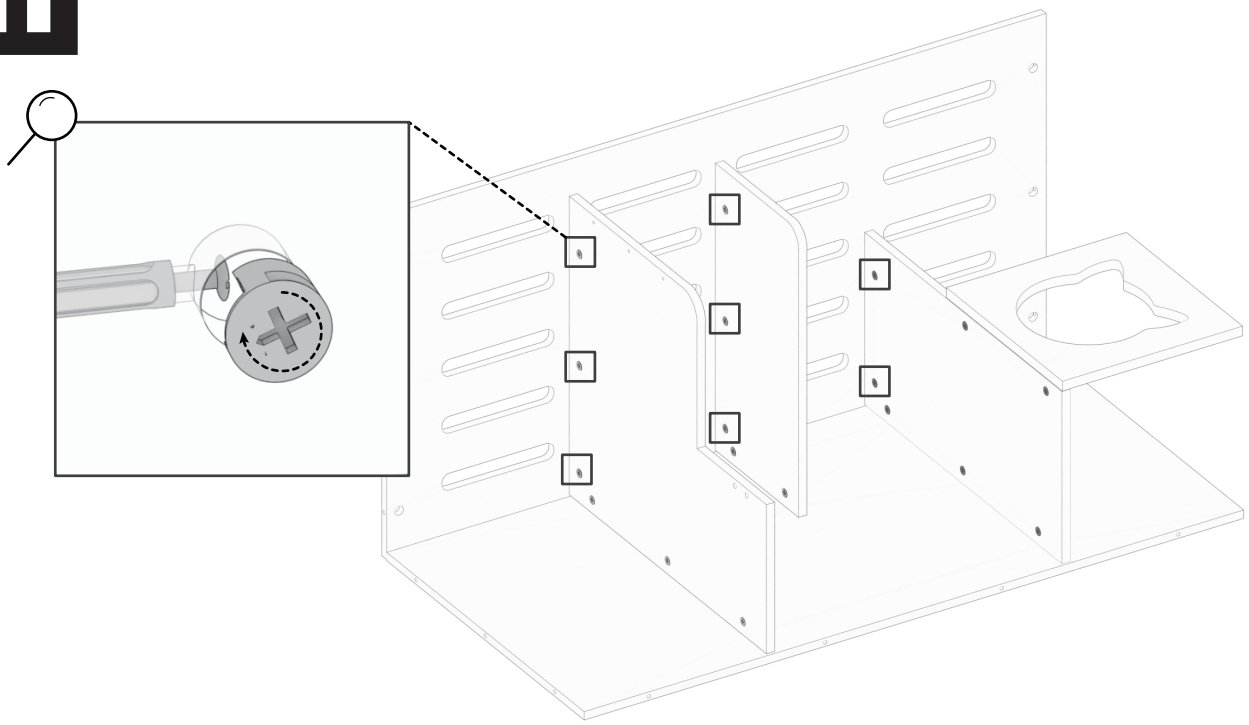

STEP

12



- It is best to run a knife along the edge.
- Both sides have a protective film.

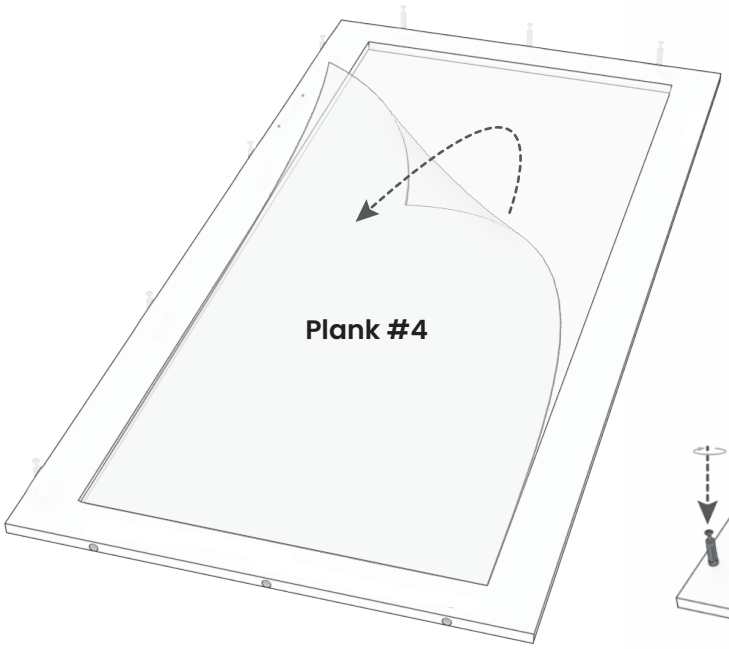

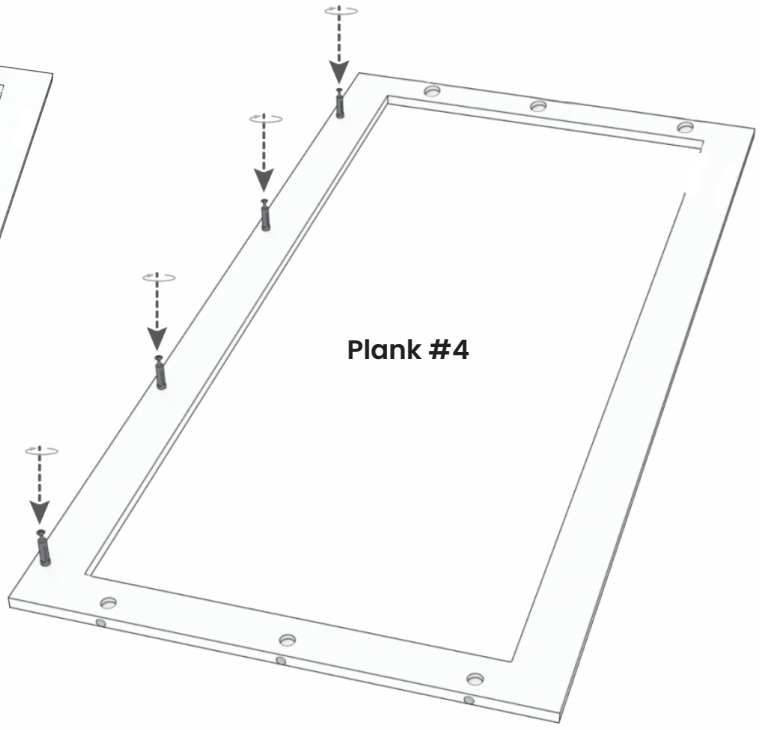

STEP
13

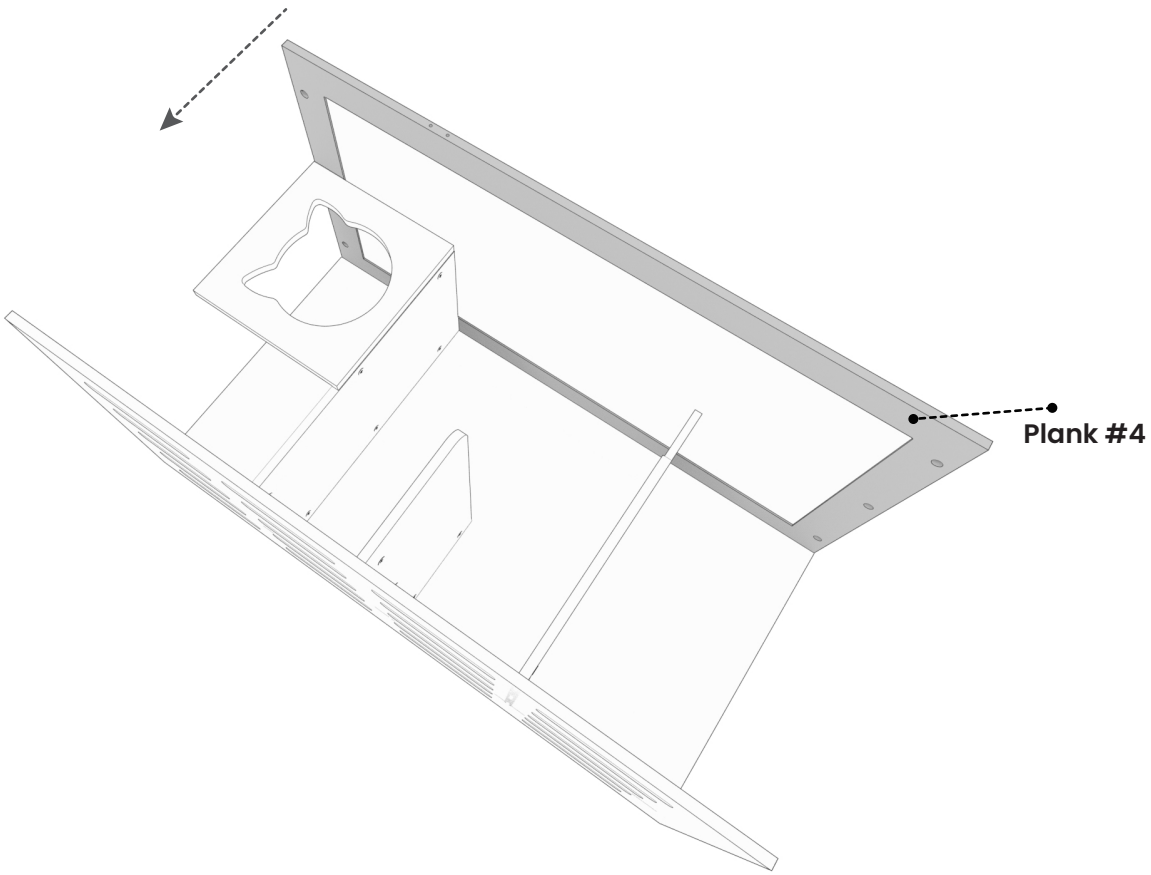

STEP
14

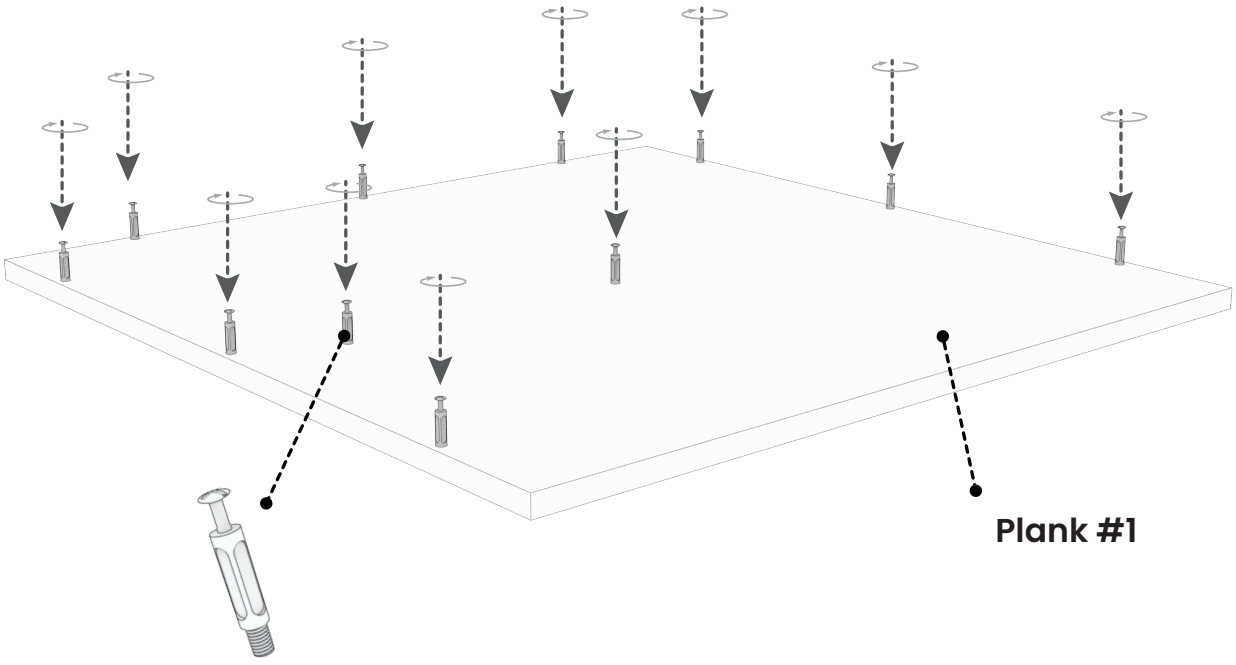

STEP

15

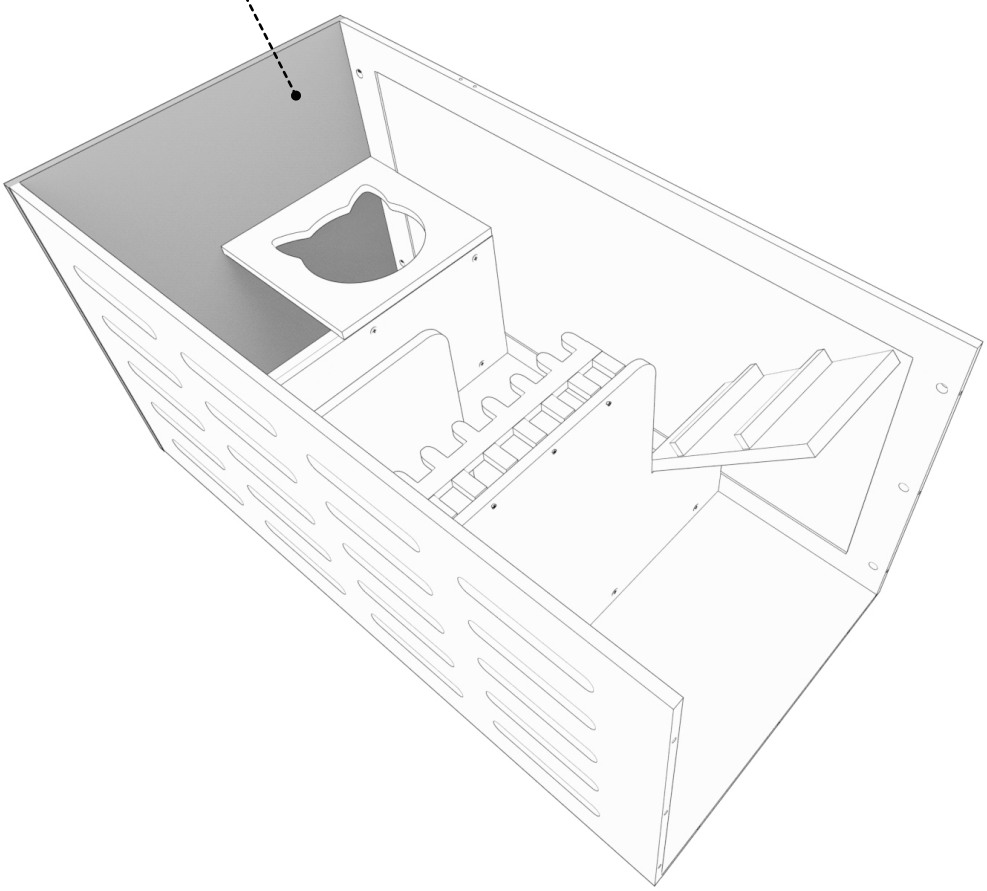

STEP

16

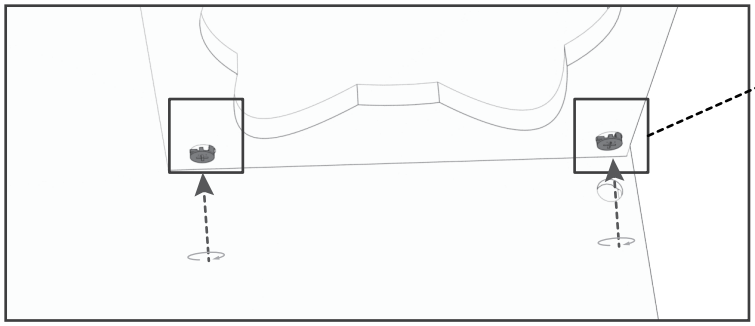

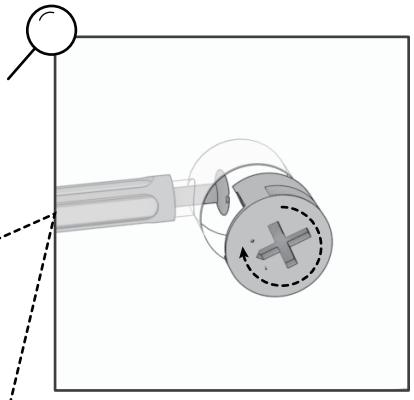

Lock the three remaining holes on the inside of plank #1 with  .

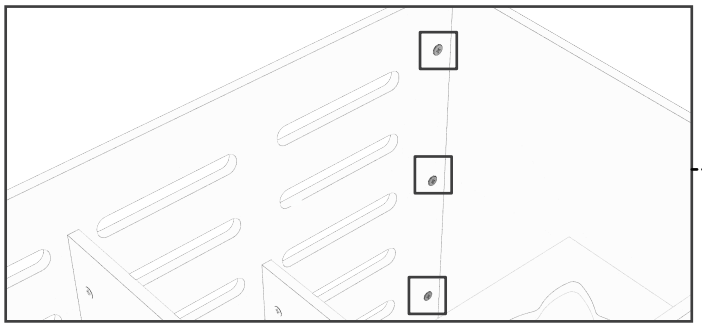

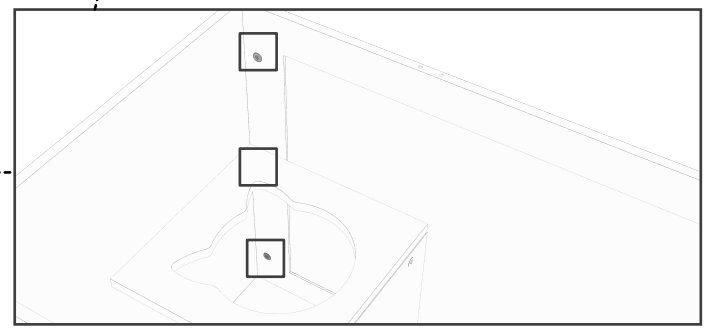

STEP

17

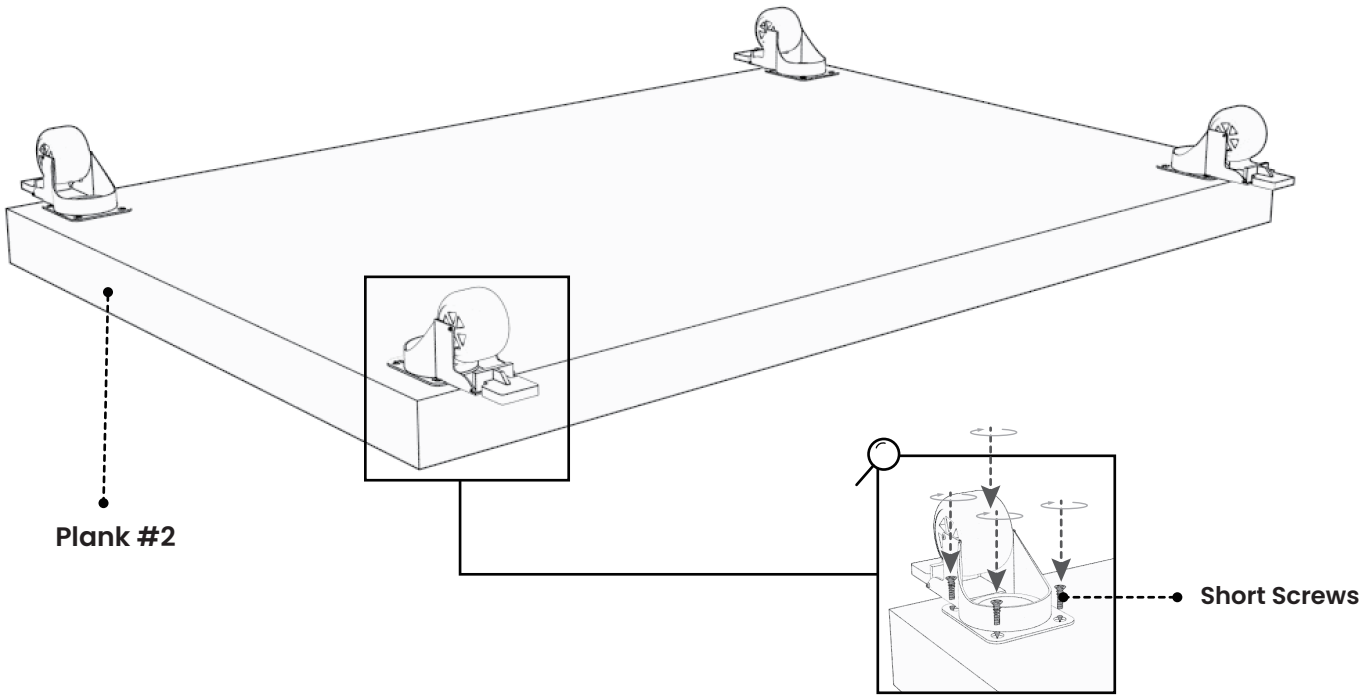

STEP

18

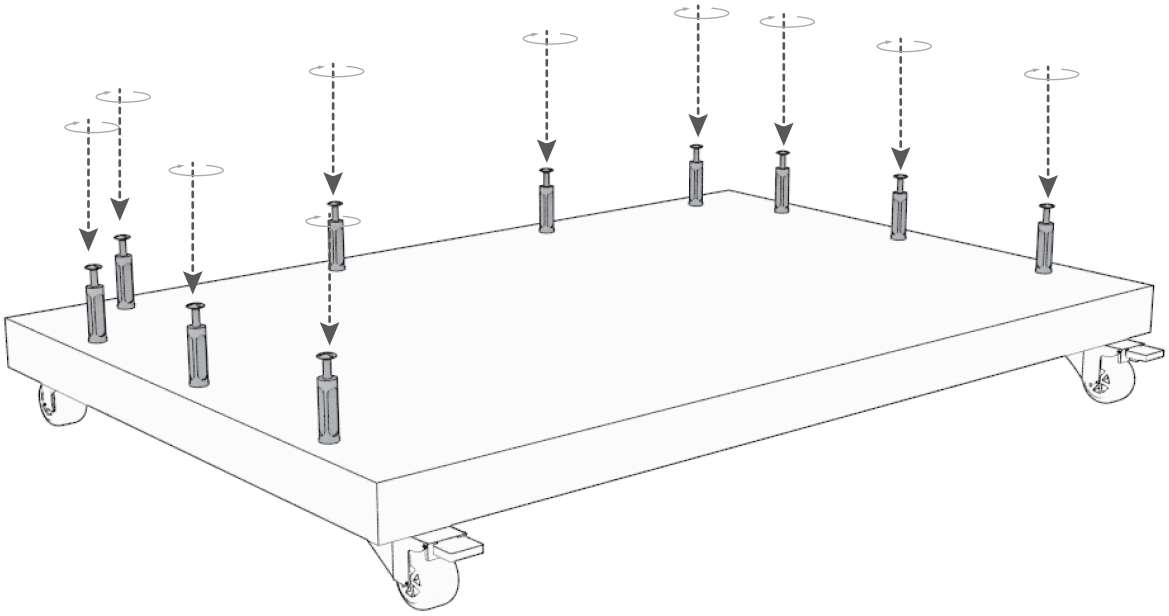

STEP

19

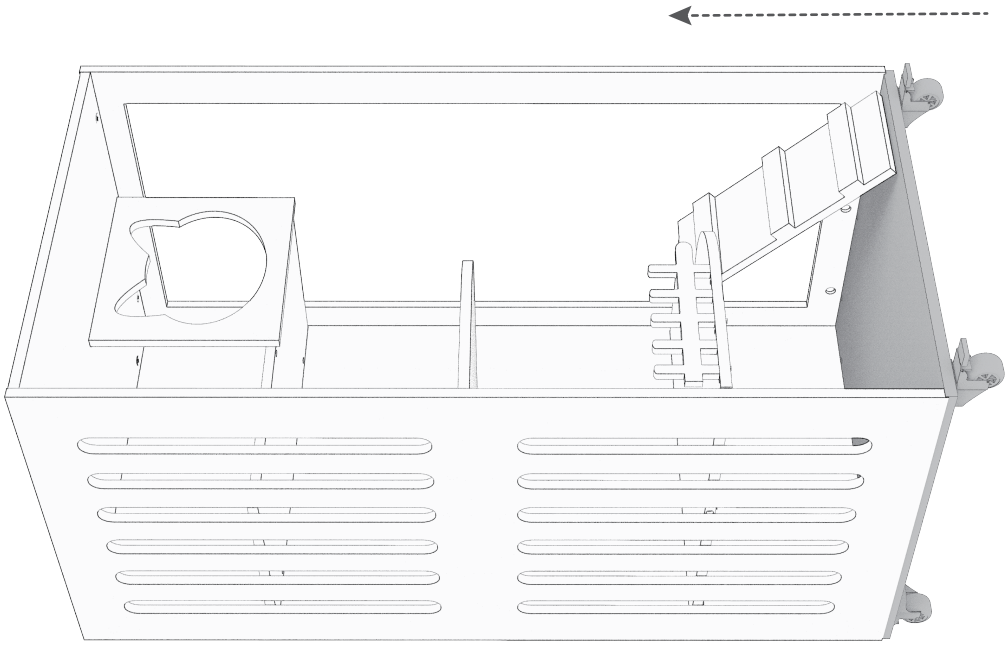

STEP

20

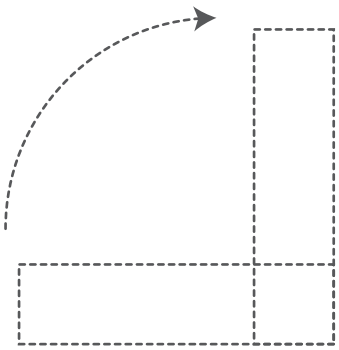

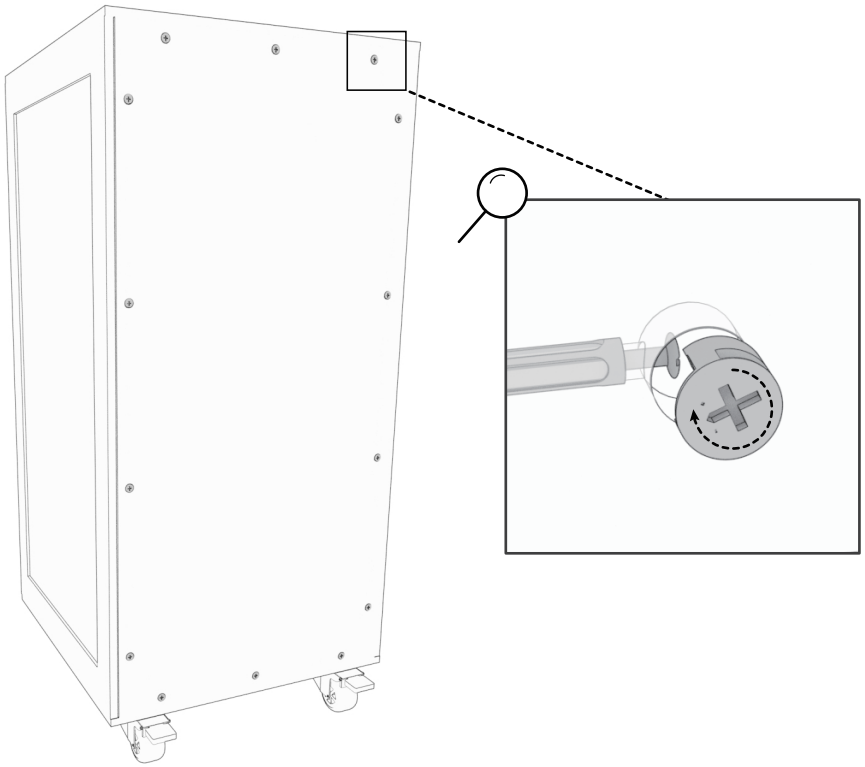

- Erect cat villa.

STEP
21

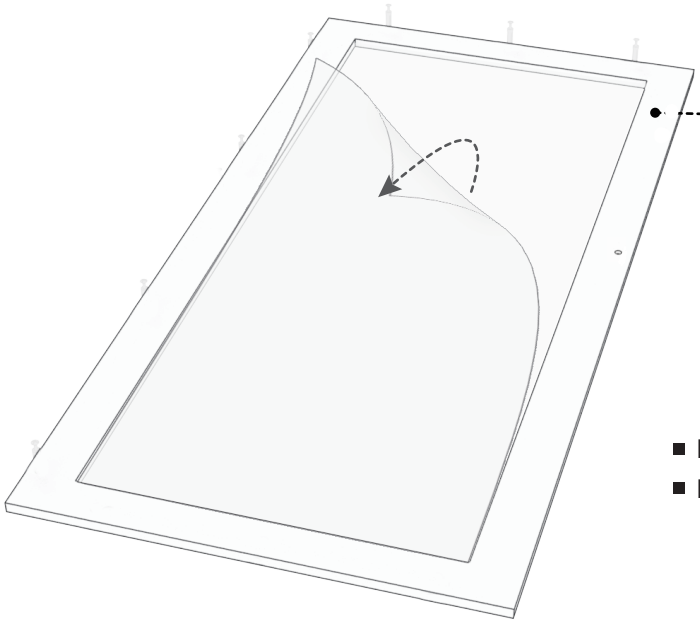



- It is best to run a knife along the edge.
- Both sides have a protective film.

STEP
22

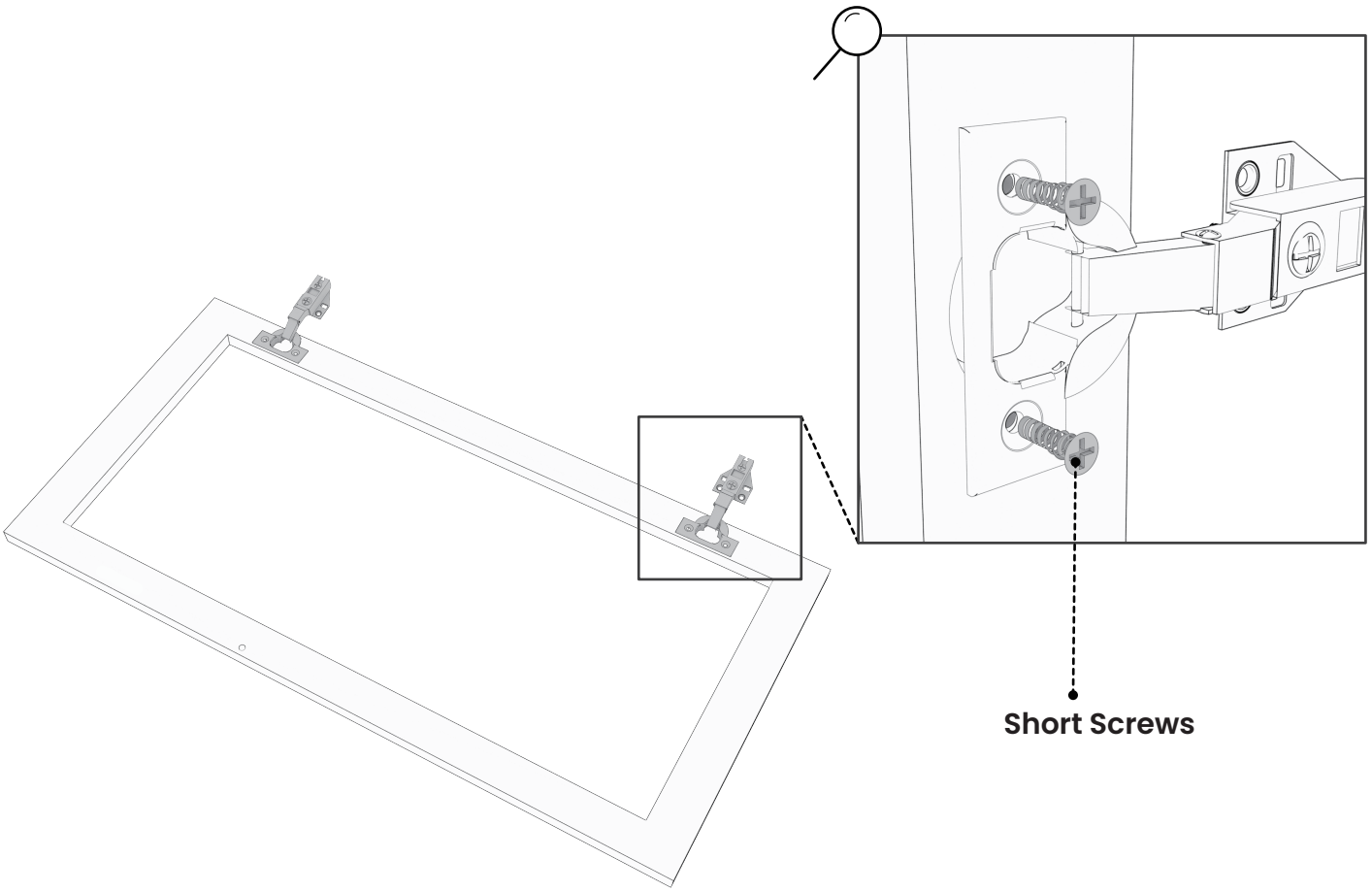

STEP

23

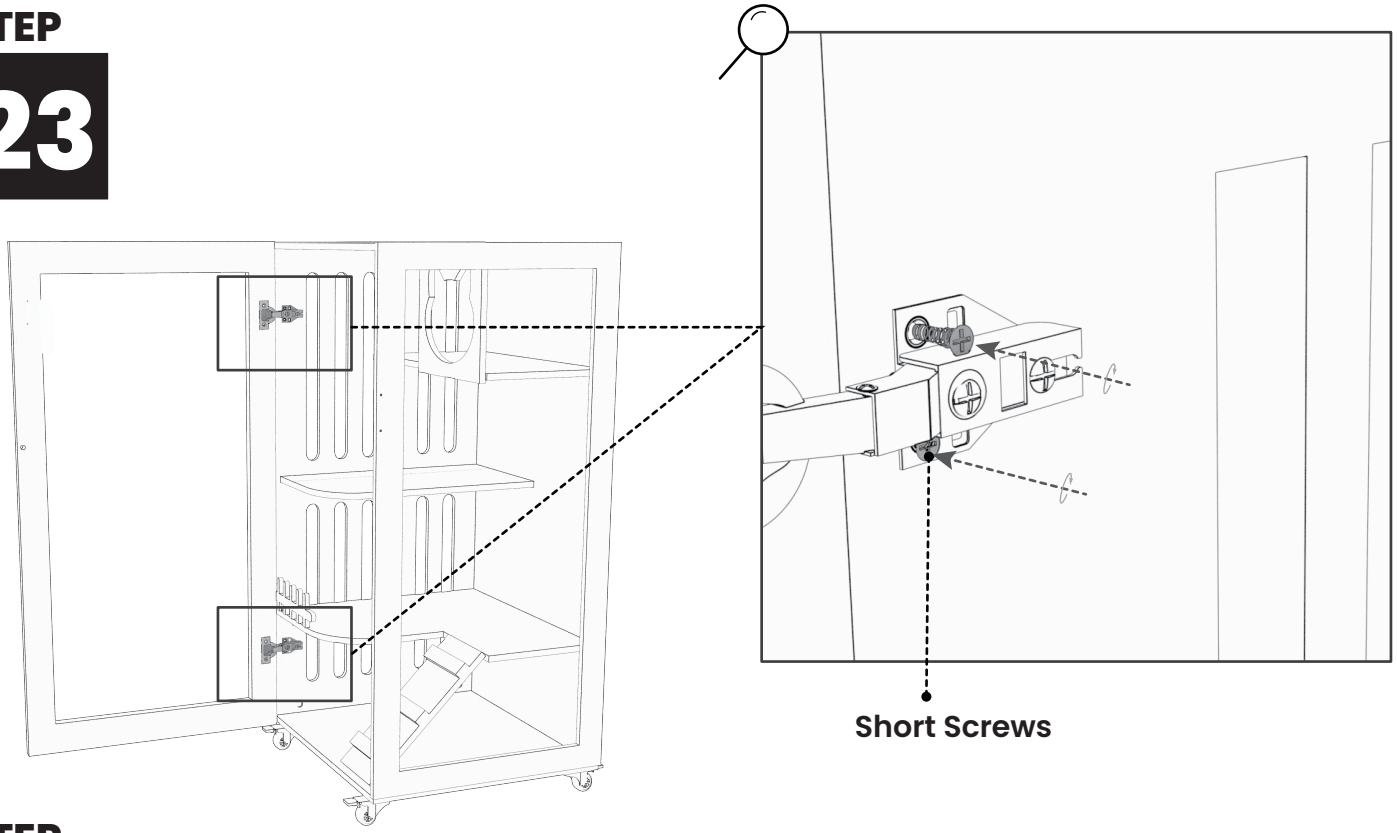

STEP

24

■ Adjust the left and right position of the door.

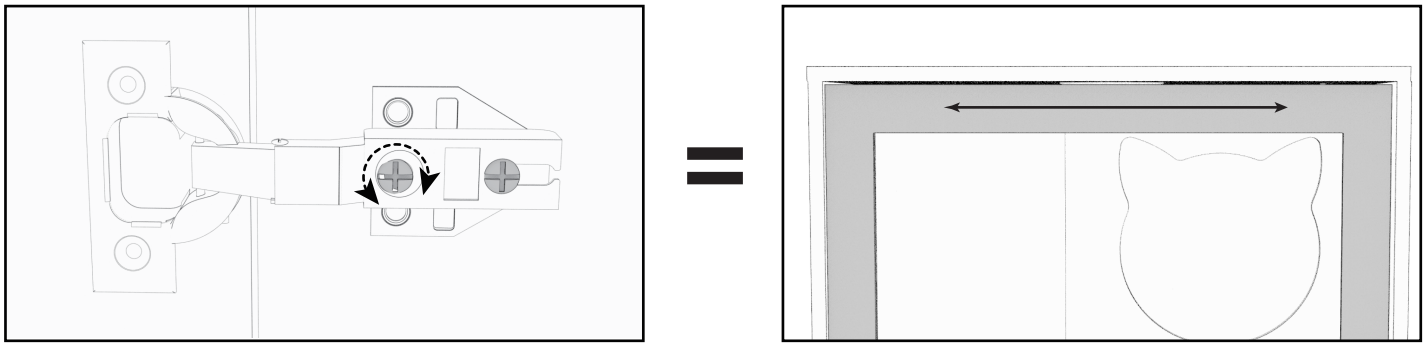

■ Adjust the clearance between the door and the cabinet.

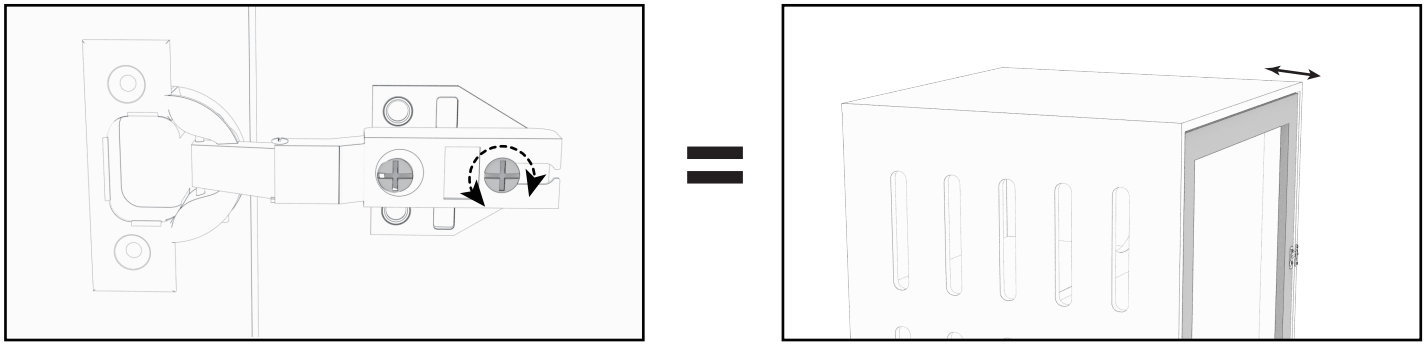

STEP

25

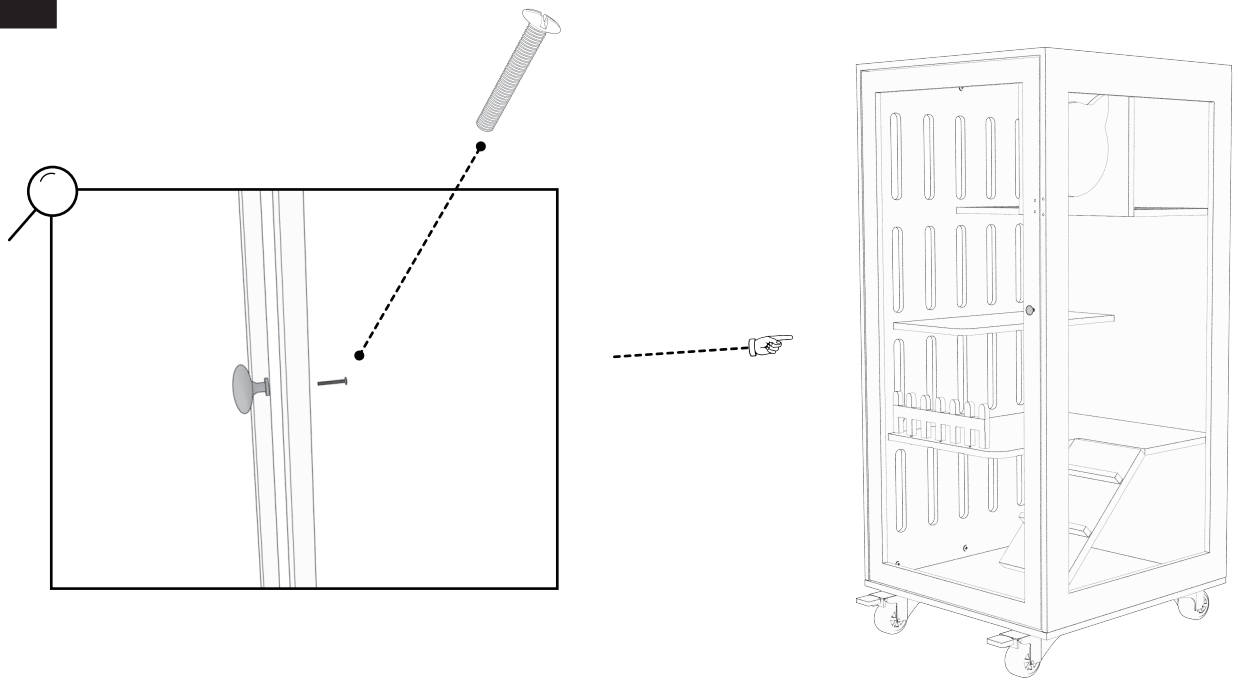

STEP

26

■ **The door sucker is complimentary and can be installed at your choice.**

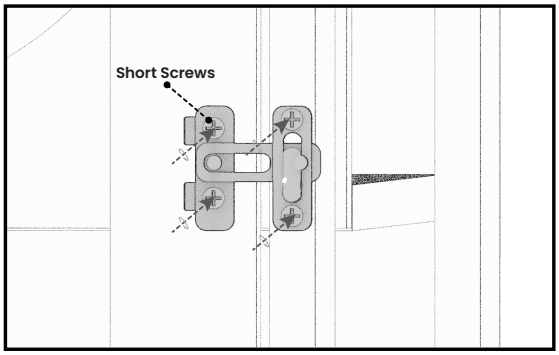

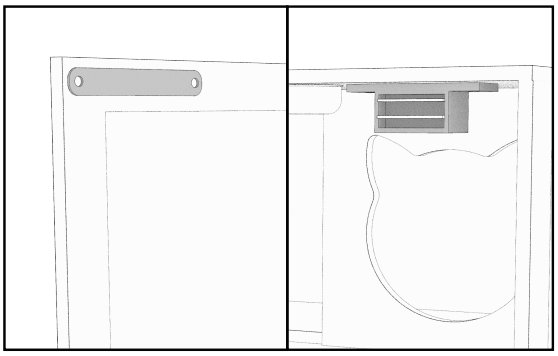

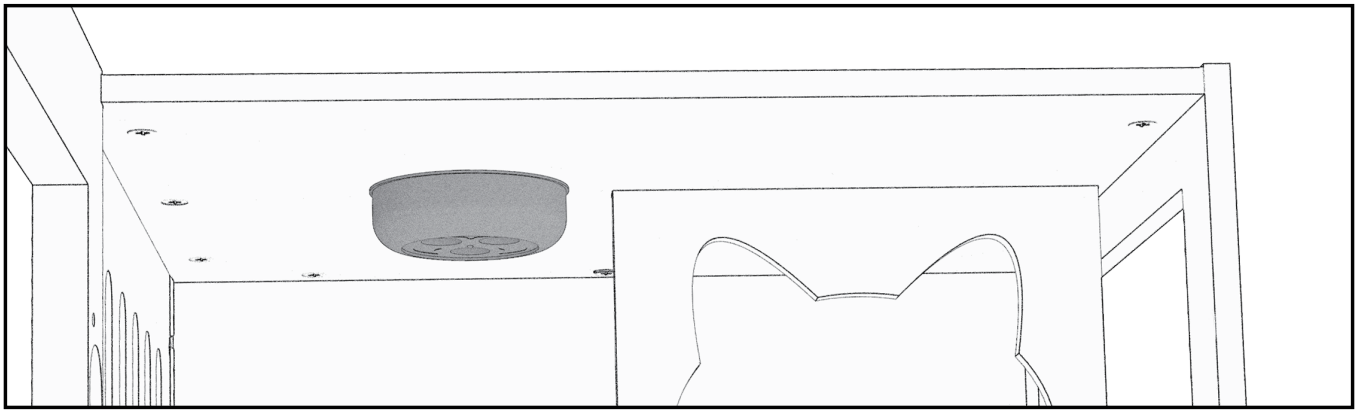

FINISH INSTALLATION

If you have any questions, please contact us.

	www.laifug.com
	LaiFugVIP
	laifug@laifug.com
	LaiFugVIP
	LaiFugVIP
	LaiFugVIP