ASSEMBLY INSTRUCTIONS

NIGHTSTAND

NOTE: THIS ITEM NOT RECOMMENDED FOR COMMERCIAL USE
KEEP THIS DOCUMENT FOR REFERENCE IN CASE PARTS ARE NEEDED
DO NOT TIGHTEN SCREWS UNTIL COMPLETELY ASSEMBLED! !

No	PARTS LIST		Q'TY
A		NIGHTSTAND	1PC

STEP 1

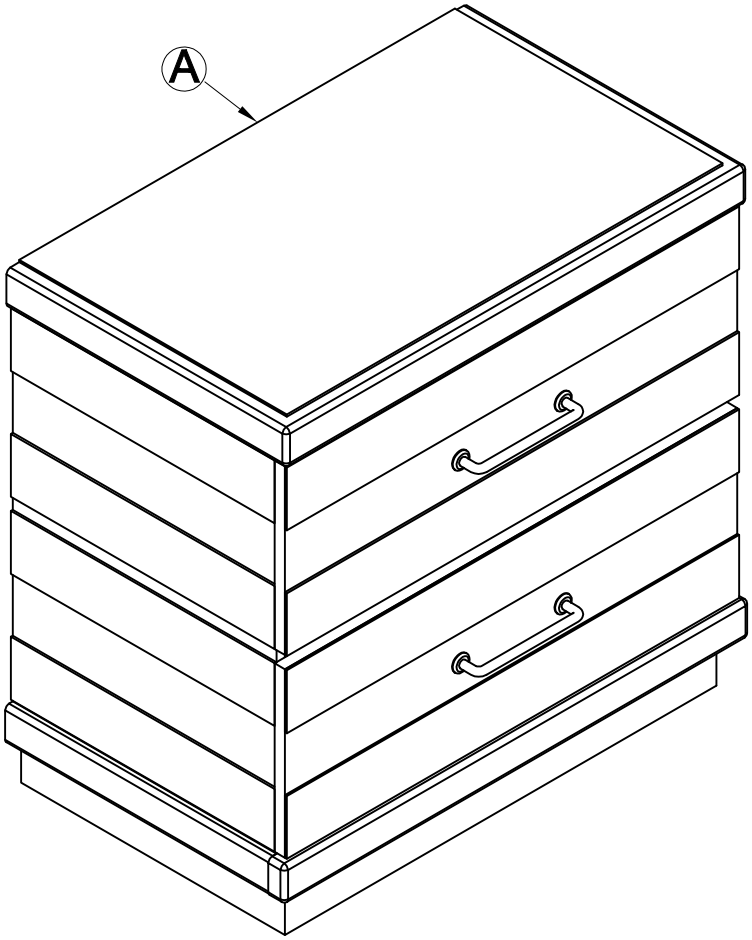

ASSEMBLY INSTRUCTIONS

CHEST

NOTE: THIS ITEM NOT RECOMMENDED FOR COMMERCIAL USE
KEEP THIS DOCUMENT FOR REFERENCE IN CASE PARTS ARE NEEDED
DO NOT TIGHTEN SCREWS UNTIL COMPLETELY ASSEMBLED! !

No	PARTS LIST		Q'TY
A		CHEST	1PC

STEP 1

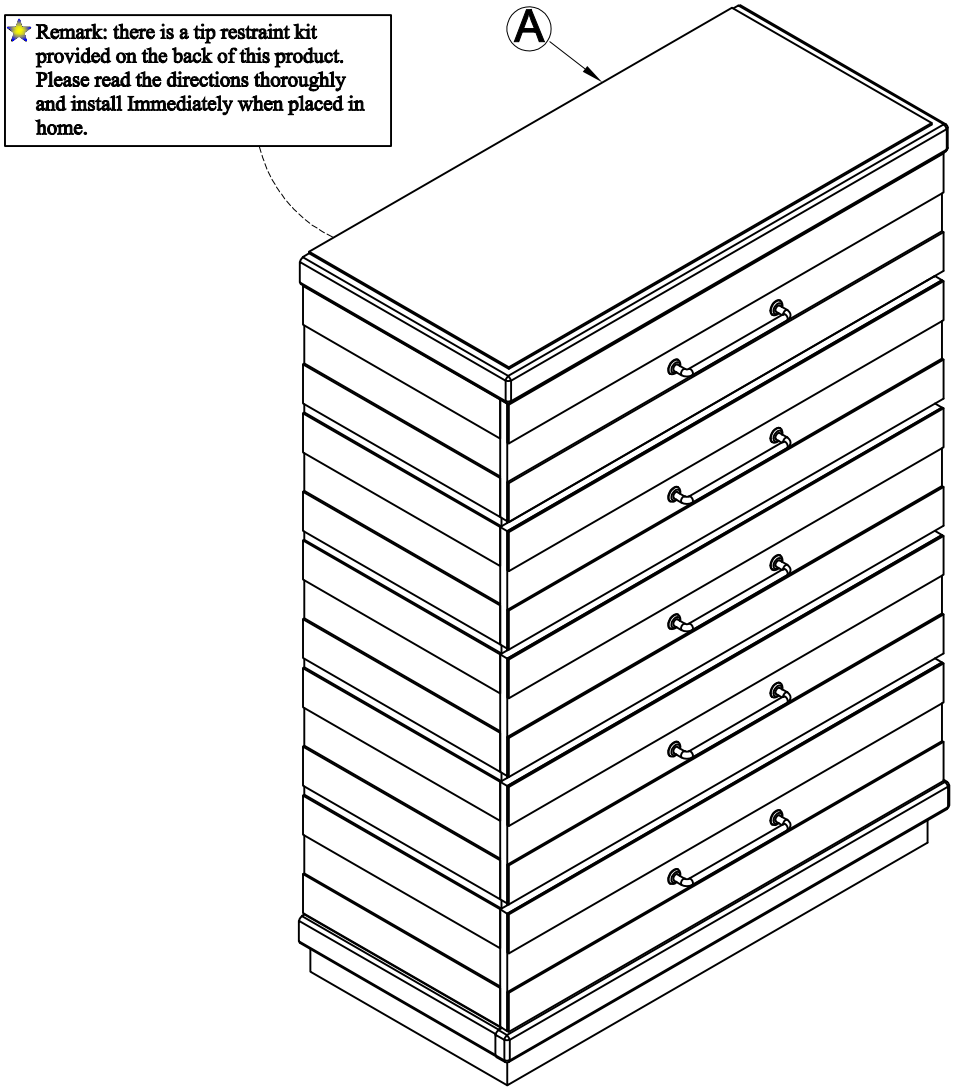

ASSEMBLY INSTRUCTIONS

DRESSER

NOTE: THIS ITEM NOT RECOMMENDED FOR COMMERCIAL USE
KEEP THIS DOCUMENT FOR REFERENCE IN CASE PARTS ARE NEEDED
DO NOT TIGHTEN SCREWS UNTIL COMPLETELY ASSEMBLED! !

No	PARTS LIST		Q'TY
A	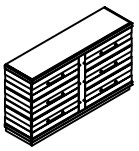	DRESSER	1PC

STEP 1

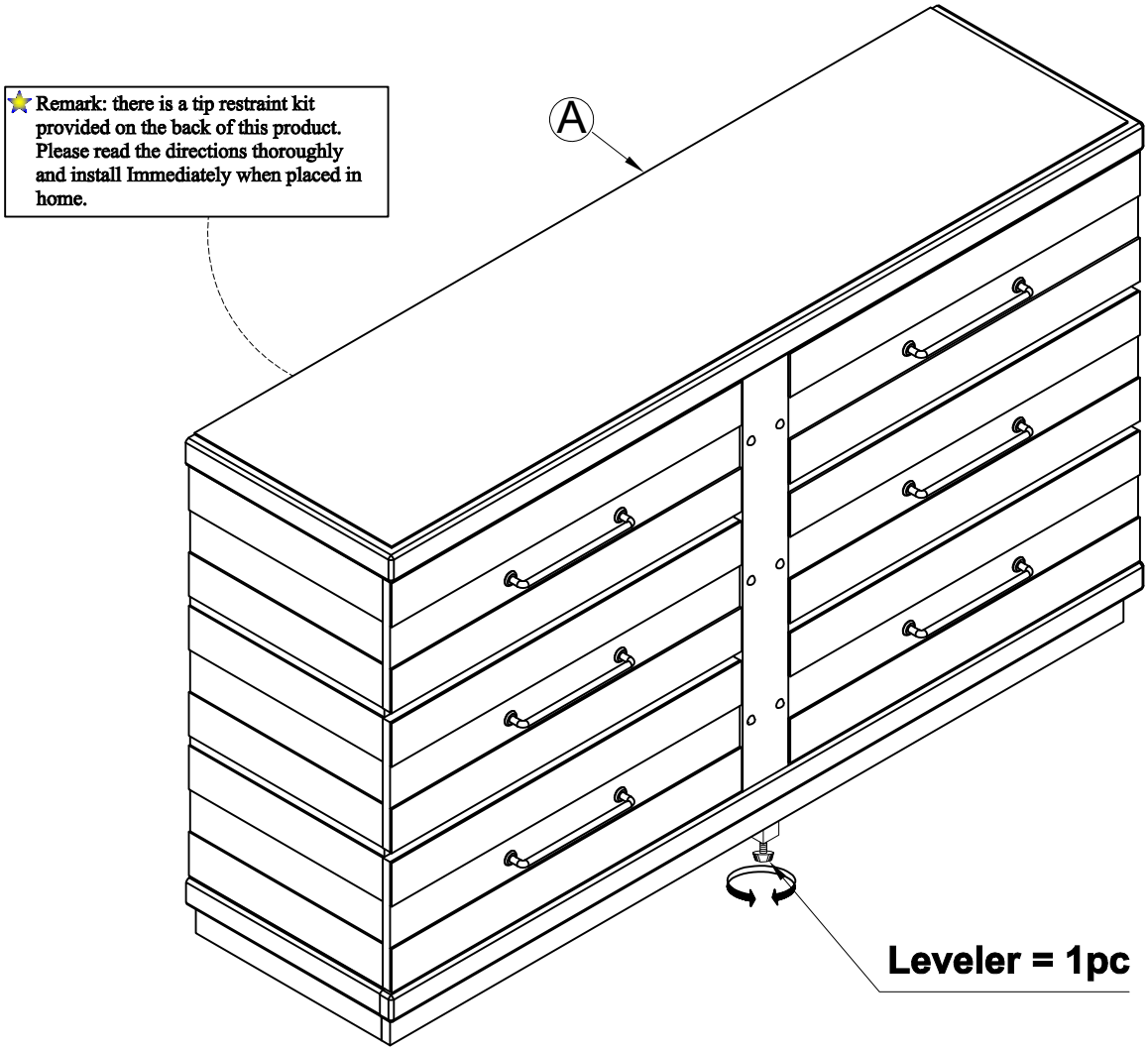

ASSEMBLY INSTRUCTIONS

MIRROR

NOTE: THIS ITEM NOT RECOMMENDED FOR COMMERCIAL USE
KEEP THIS DOCUMENT FOR REFERENCE IN CASE PARTS ARE NEEDED
DO NOT TIGHTEN SCREWS UNTIL COMPLETELY ASSEMBLED! !

No	PARTS LIST		Q'TY
A		DRESSER	1PC
B		MIRROR	1PC
C		MIRROR SUPPORT IN MIRROR BOX	2PCS

NO.	HARDWARE LIST			Q'TY
1		ALLEN BOLT	Ø1/4"x1-1/2"	8PCS
2		LOCK WASHER	Ø1/4" x 10D x 1.1mm	8PCS
3		FLAT WASHER	Ø1/4" x 18D x 2mm	8PCS
4		ALLEN KEY	2-1/4" x 4mm	1PC

STEP 1

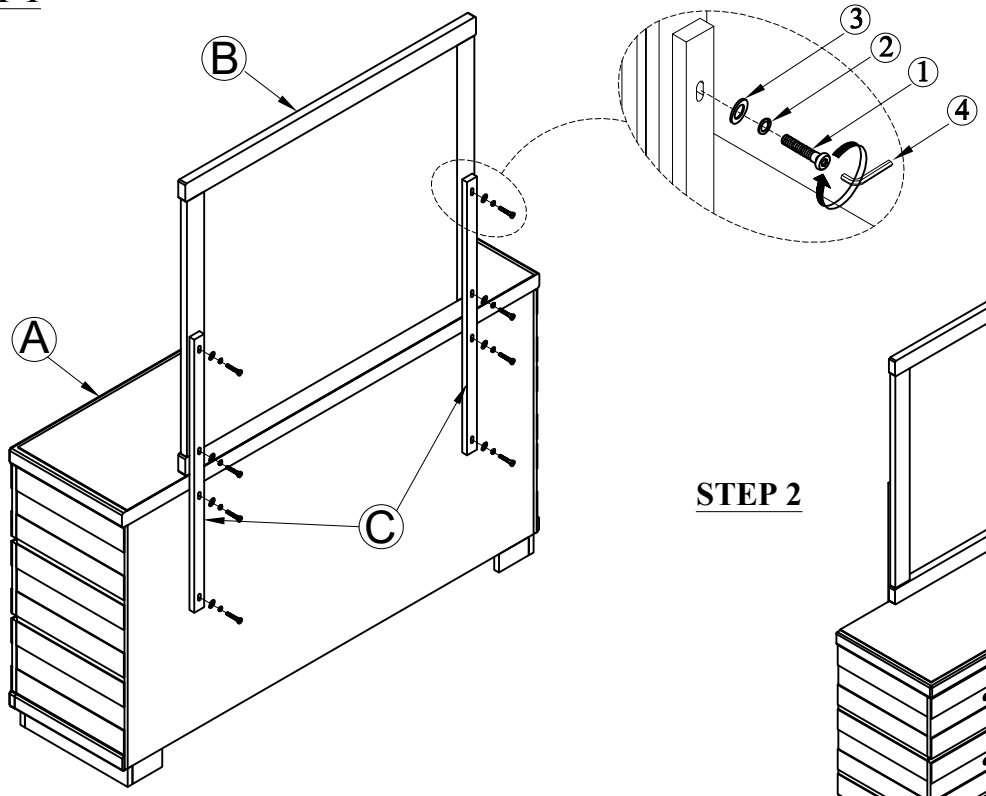

STEP 2

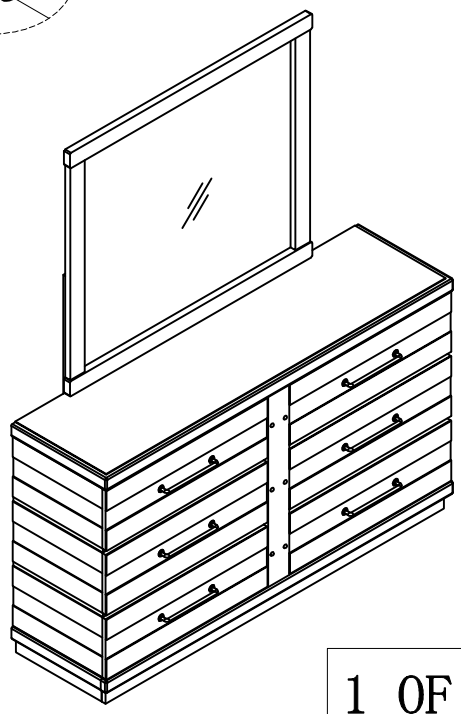

ASSEMBLY INSTRUCTIONS

QUEEN PANEL HEADBOARD & FOOTBOARD & SLATS

SIDE QUEEN/ KING RAILS

NOTE: THIS ITEM NOT RECOMMENDED FOR COMMERCIAL USE
KEEP THIS DOCUMENT FOR REFERENCE IN CASE PARTS ARE NEEDED
DO NOT TIGHTEN SCREWS UNTIL COMPLETELY ASSEMBLED! !

No	PARTS LIST		Q'TY
A		HEADBOARD	1PC
B		LEFT LEG	1PC
C		RIGHT LEG	1PC
D		FOOTBOARD	1PC
E		SIDE RAIL	2PCS
F		SLATS	4PCS
G		SUPPORT WITH LEVELER	4PCS

No	HARDWARE LIST			Q'TY
1		BOLT	Ø5/16" x 2"	8PCS
2		LOCK WASHER	Ø5/16" x 10D x 1.1mm	8PCS
3		FLAT WASHER	Ø5/16" x 18D x 2mm	8PCS
4		WRENCH	2-1/4" x 4mm	1PC
5		THREAD BOLT	Ø5/16" x 90mm	8PCS
6		CURVED WASHERS	Ø5/16" DIA	8PCS
7		HEX NUT	Ø5/16" DIA	8PCS
8		OPEN WRENCH	12mm	1PC
9		SCREW	1-1/4" x 4mm	8PCS
10		POWER OUTLET FOR SPEAKER	-	1PC

No	HARDWARE LIST FOR LAMP			Q'TY
11		ALLEN BOLT	Ø1/4"x1-3/4"	4PCS
12		LOCK WASHER	Ø1/4" x 10D x 1.1mm	8PCS
13		FLAT WASHER	Ø1/4" x 18D x 2mm	8PCS
14		HEX NUT	Ø1/4" DIA	4PCS
15		HEX NUT	Ø1/4" DIA	4PCS
16		LAMP	-	2PCS
17		LIGHT BULB	-	2PCS
18		POWER OUTLET FOR LAMP	-	1PC

ASSEMBLY INSTRUCTIONS

"QUEEN PANEL HEADBOARD & FOOTBOARD & SLATS"

SIDE QUEEN/ KING RAILS

NOTE: THIS ITEM NOT RECOMMENDED FOR COMMERCIAL USE
KEEP THIS DOCUMENT FOR REFERENCE IN CASE PARTS ARE NEEDED
DO NOT TIGHTEN SCREWS UNTIL COMPLETELY ASSEMBLED! !

STEP 1

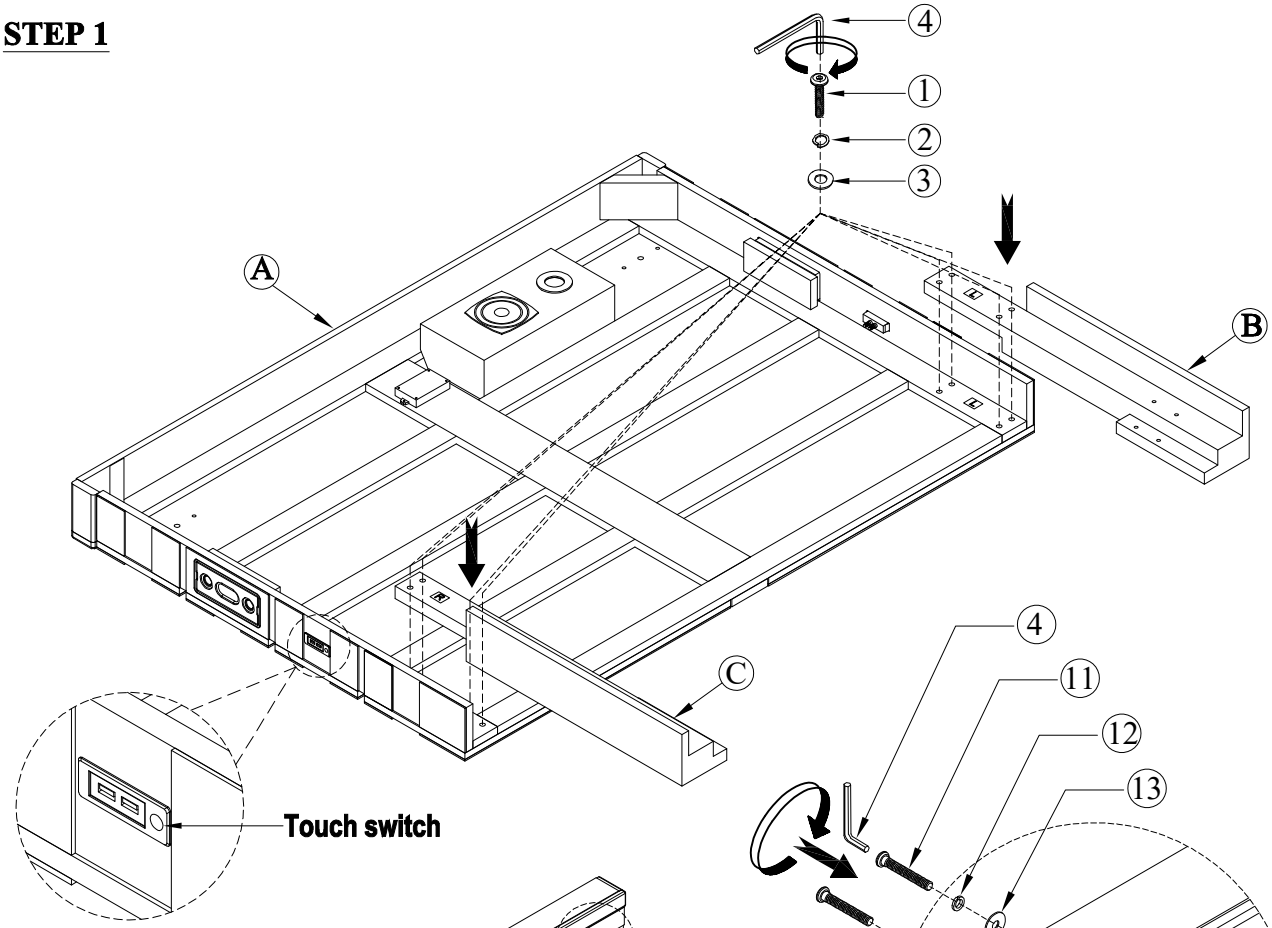

STEP 2

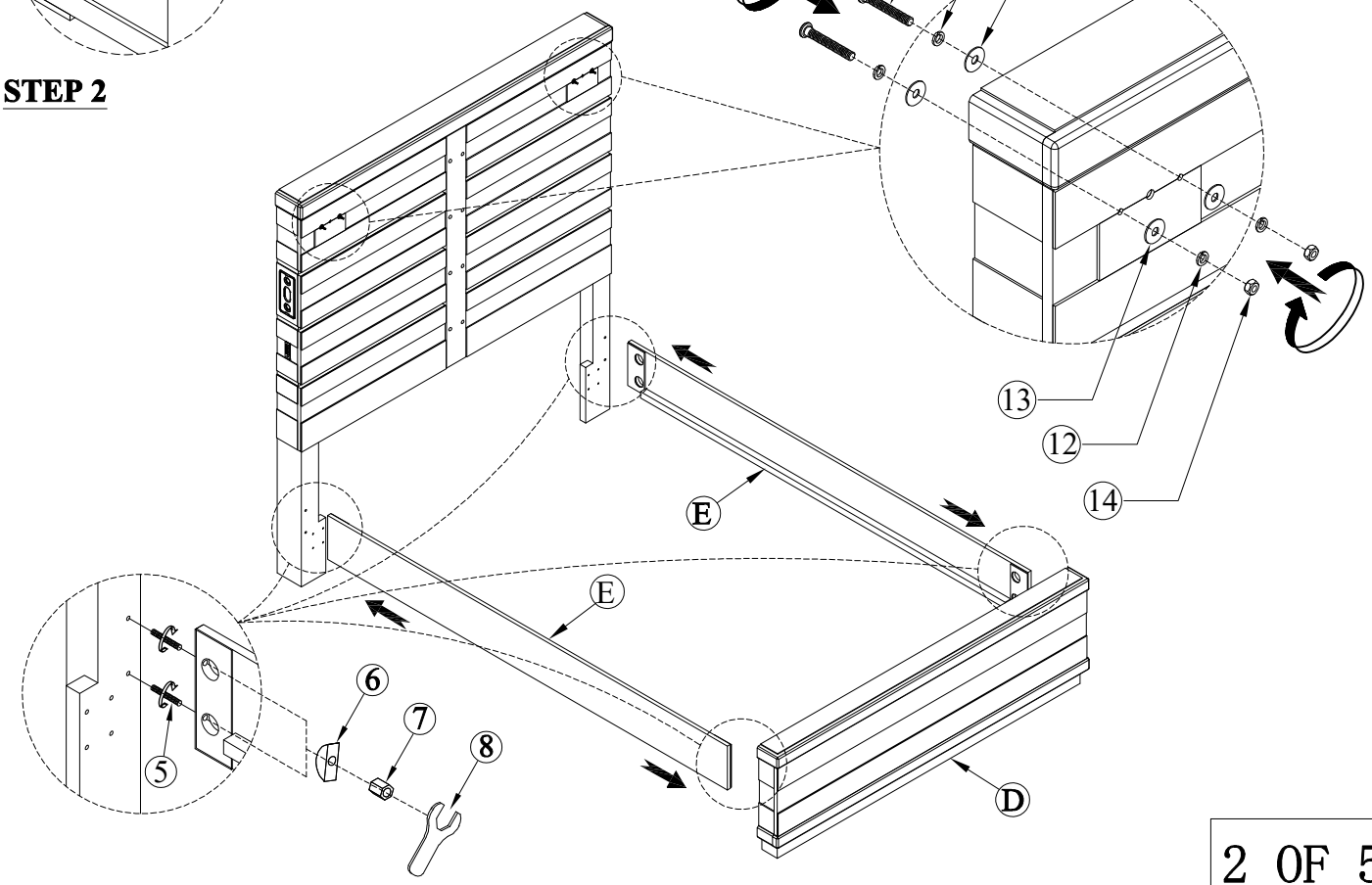

ASSEMBLY INSTRUCTIONS

"QUEEN PANEL HEADBOARD & FOOTBOARD & SLATS"

SIDE QUEEN/ KING RAILS

NOTE: THIS ITEM NOT RECOMMENDED FOR COMMERCIAL USE
KEEP THIS DOCUMENT FOR REFERENCE IN CASE PARTS ARE NEEDED
DO NOT TIGHTEN SCREWS UNTIL COMPLETELY ASSEMBLED! !

STEP 3

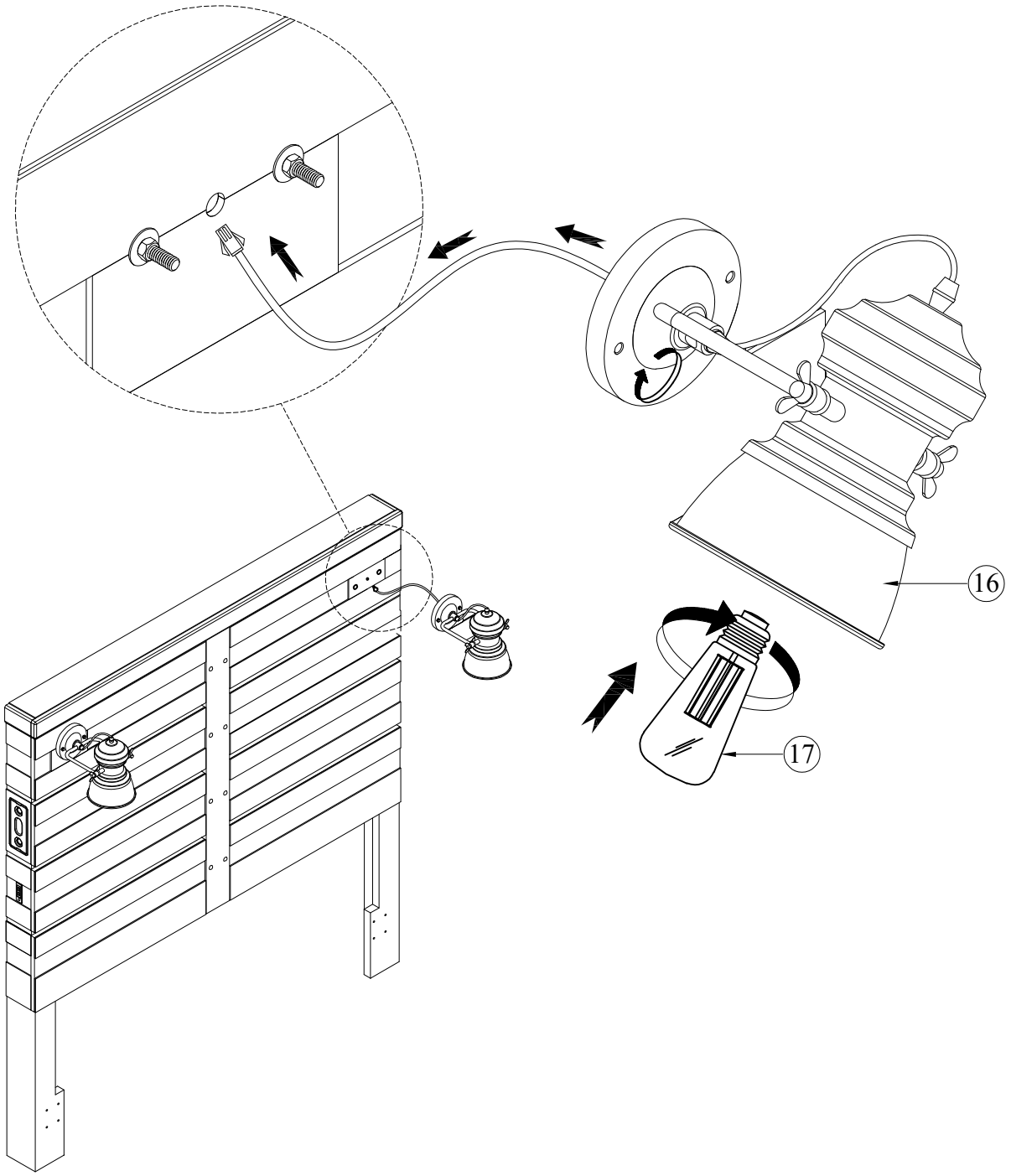

ASSEMBLY INSTRUCTIONS

"QUEEN PANEL HEADBOARD & FOOTBOARD & SLATS"

SIDE QUEEN/ KING RAILS

NOTE: THIS ITEM NOT RECOMMENDED FOR COMMERCIAL USE
KEEP THIS DOCUMENT FOR REFERENCE IN CASE PARTS ARE NEEDED
DO NOT TIGHTEN SCREWS UNTIL COMPLETELY ASSEMBLED! !

STEP 4

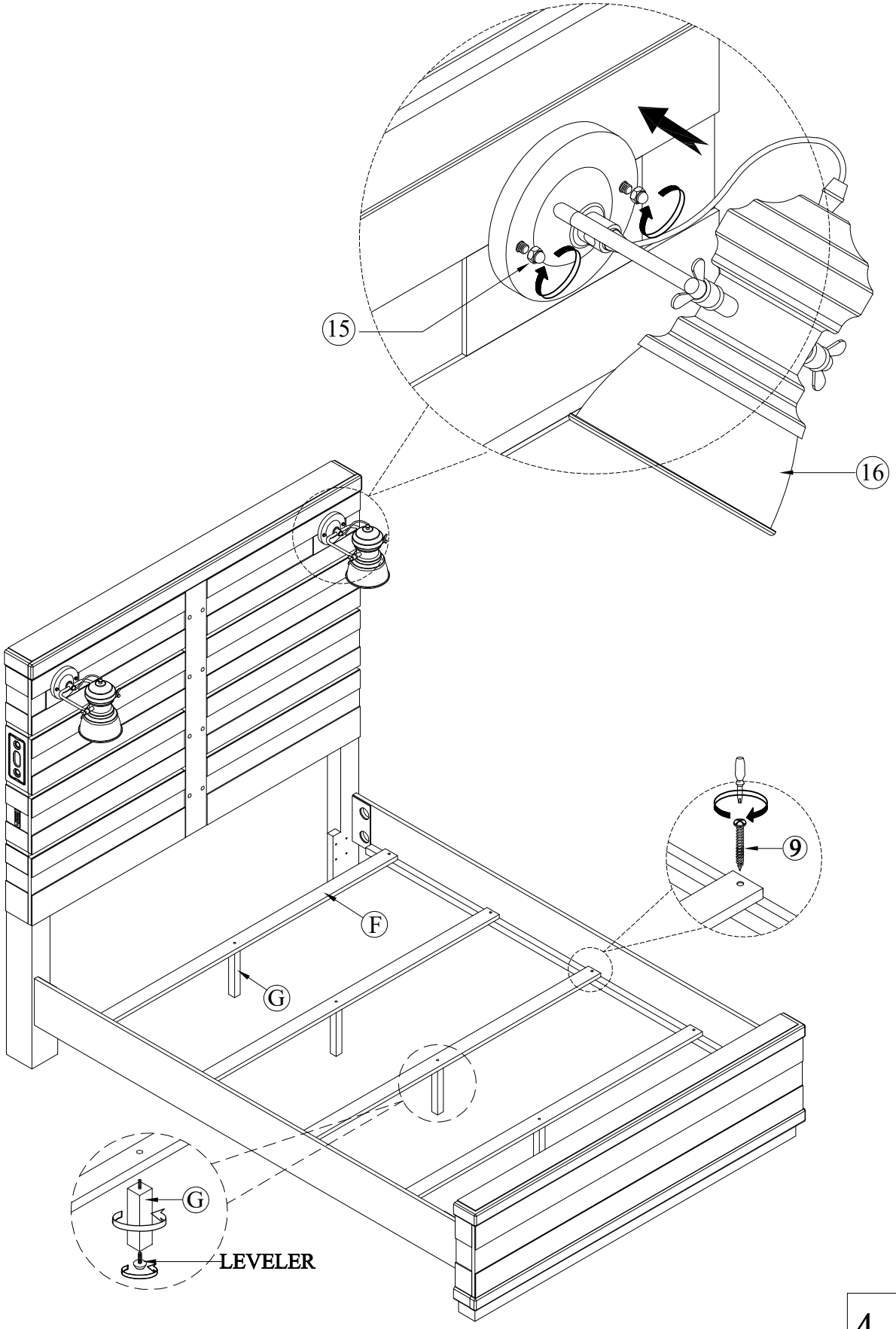

ASSEMBLY INSTRUCTIONS

"QUEEN PANEL HEADBOARD & FOOTBOARD & SLATS"

SIDE QUEEN/ KING RAILS

NOTE: THIS ITEM NOT RECOMMENDED FOR COMMERCIAL USE

KEEP THIS DOCUMENT FOR REFERENCE IN CASE PARTS ARE NEEDED

DO NOT TIGHTEN SCREWS UNTIL COMPLETELY ASSEMBLED! !

STEP 5

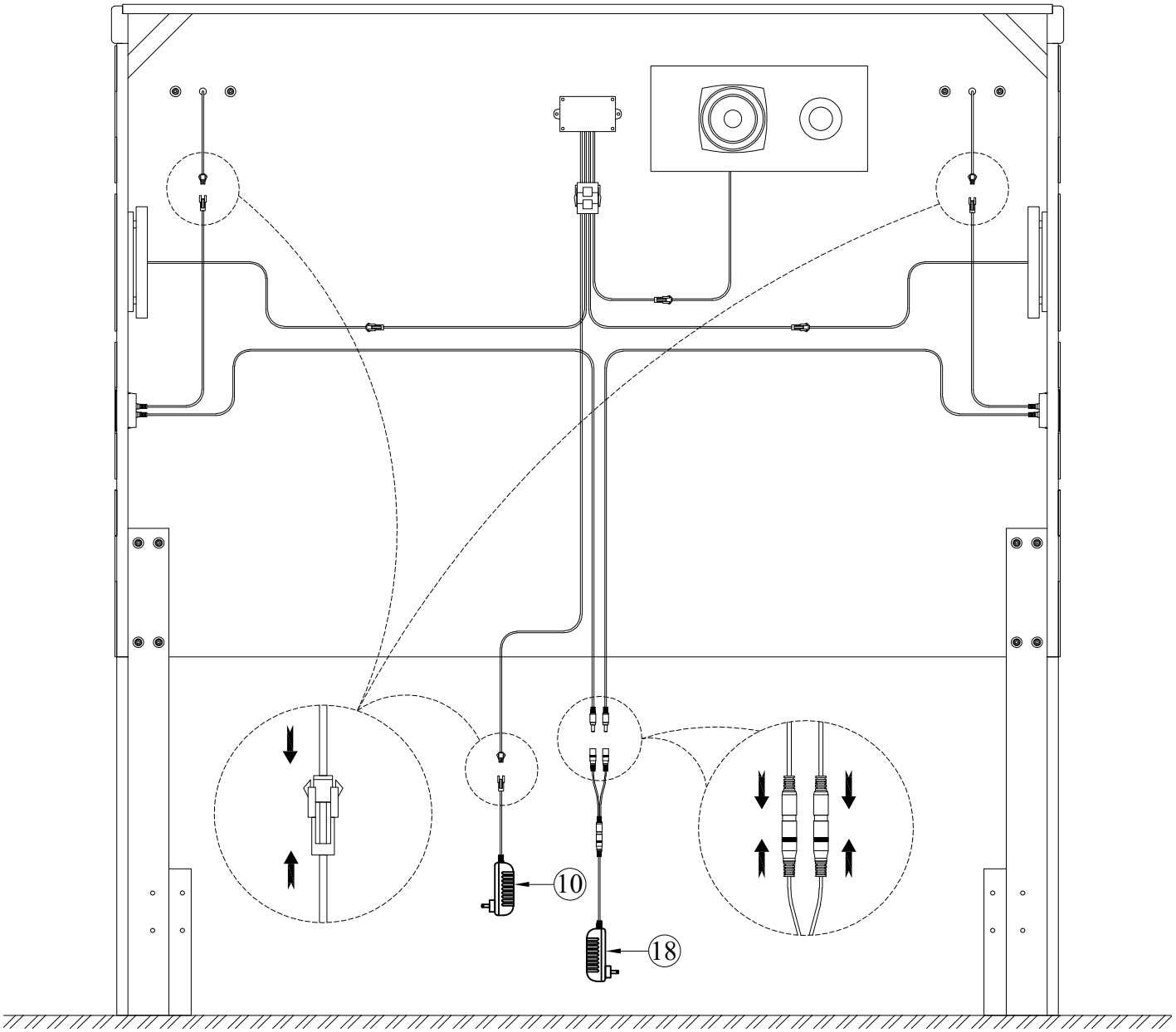

ASSEMBLY INSTRUCTIONS

"KING PANEL HEADBOARD & FOOTBOARD & SLATS"

SIDE QUEEN/ KING RAILS

NOTE: THIS ITEM NOT RECOMMENDED FOR COMMERCIAL USE

KEEP THIS DOCUMENT FOR REFERENCE IN CASE PARTS ARE NEEDED

DO NOT TIGHTEN SCREWS UNTIL COMPLETELY ASSEMBLED! !

No	PARTS LIST		Q'TY
A		HEADBOARD	1PC
B		LEFT LEG	1PC
C		RIGHT LEG	1PC
D		FOOTBOARD	1PC
E		SIDE RAIL	2PCS
F		SLATS	4PCS
G		SUPPORT WITH LEVELER	8PCS

No	HARDWARE LIST			Q'TY
1		BOLT	Ø5/16" x 2"	8PCS
2		LOCK WASHER	Ø5/16" x 10D x 1.1mm	8PCS
3		FLAT WASHER	Ø5/16" x 18D x 2mm	8PCS
4		WRENCH	2-1/4" x 4mm	1PC
5		THREAD BOLT	Ø5/16" x 90mm	8PCS
6		CURVED WASHERS	Ø5/16" DIA	8PCS
7		HEX NUT	Ø5/16" DIA	8PCS
8		OPEN WRENCH	12mm	1PC
9		SCREW	1-1/4" x 4mm	8PCS
10		POWER OUTLET FOR SPEAKER	-	1PC

No	HARDWARE LIST FOR LAMP			Q'TY
11		ALLEN BOLT	Ø1/4"x1-3/4"	4PCS
12		LOCK WASHER	Ø1/4" x 10D x 1.1mm	8PCS
13		FLAT WASHER	Ø1/4" x 18D x 2mm	8PCS
14		HEX NUT	Ø1/4" DIA	4PCS
15		HEX NUT	Ø1/4" DIA	4PCS
16		LAMP	-	2PCS
17		LIGHT BULB	-	2PCS
18		POWER OUTLET FOR LAMP	-	1PC

ASSEMBLY INSTRUCTIONS

"KING PANEL HEADBOARD & FOOTBOARD & SLATS"

SIDE QUEEN/ KING RAILS

NOTE: THIS ITEM NOT RECOMMENDED FOR COMMERCIAL USE
KEEP THIS DOCUMENT FOR REFERENCE IN CASE PARTS ARE NEEDED
DO NOT TIGHTEN SCREWS UNTIL COMPLETELY ASSEMBLED! !

STEP 1

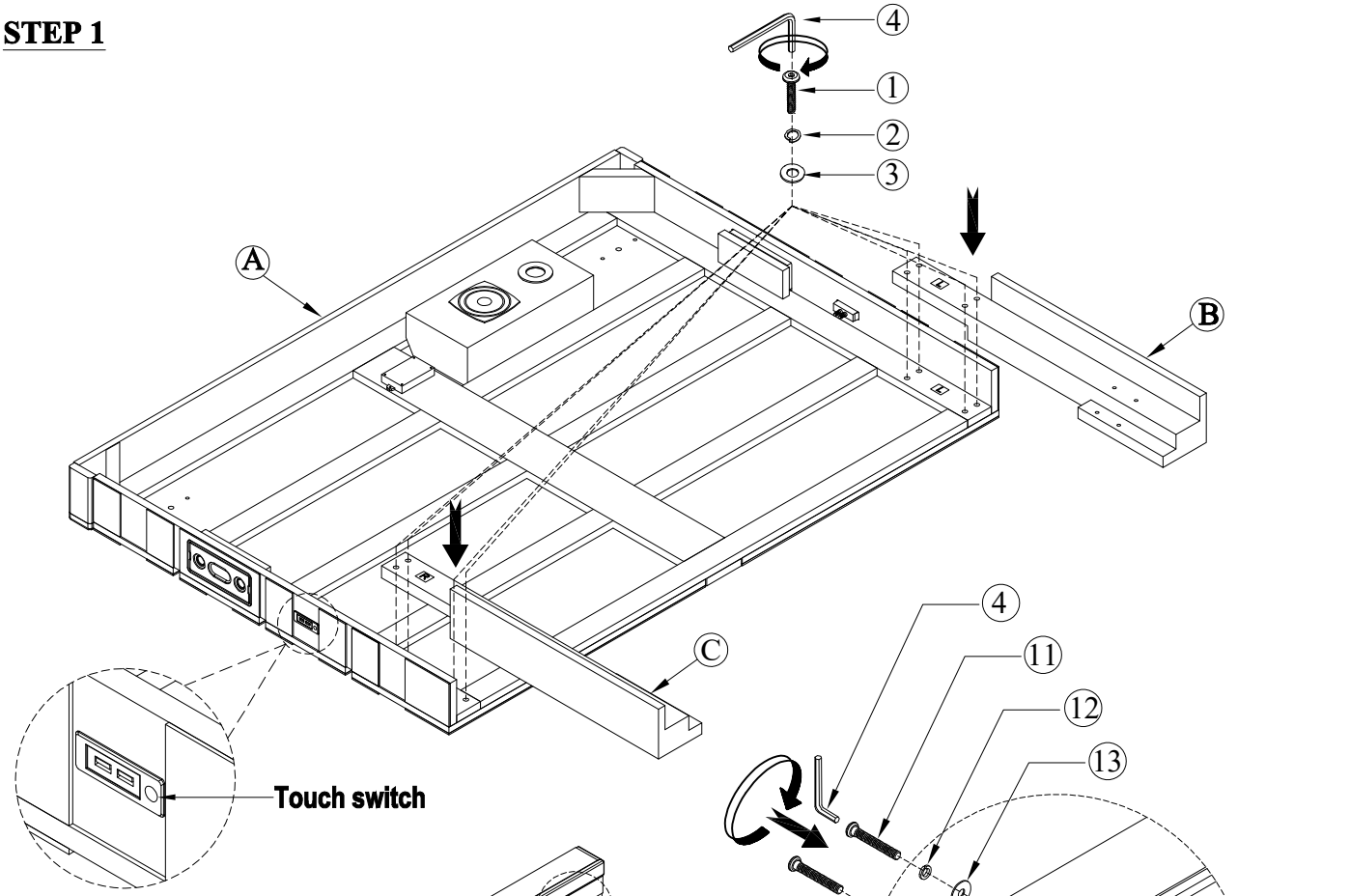

STEP 2

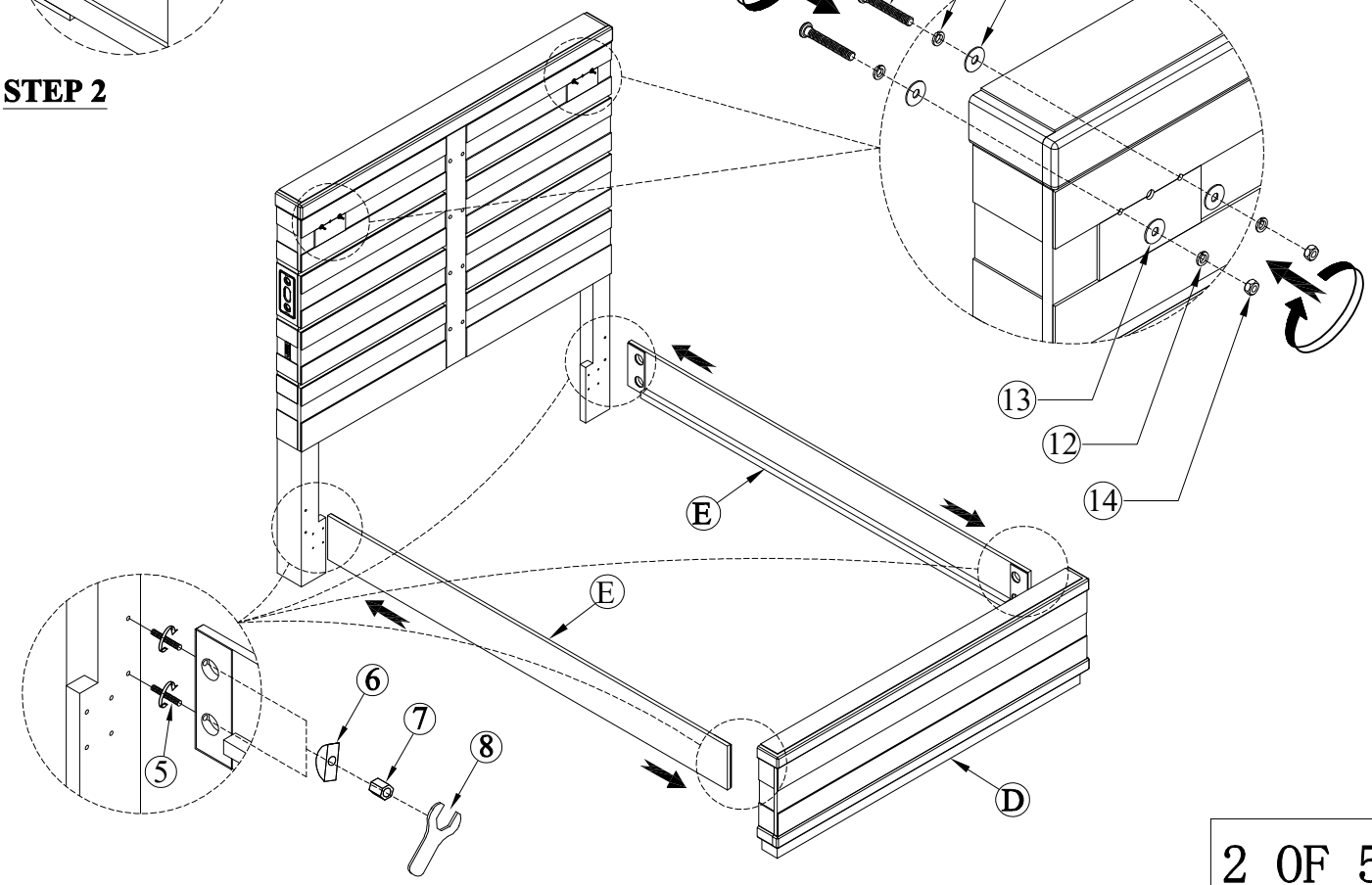

ASSEMBLY INSTRUCTIONS

"KING PANEL HEADBOARD & FOOTBOARD & SLATS"

SIDE QUEEN/ KING RAILS

NOTE: THIS ITEM NOT RECOMMENDED FOR COMMERCIAL USE
KEEP THIS DOCUMENT FOR REFERENCE IN CASE PARTS ARE NEEDED
DO NOT TIGHTEN SCREWS UNTIL COMPLETELY ASSEMBLED! !

STEP 3

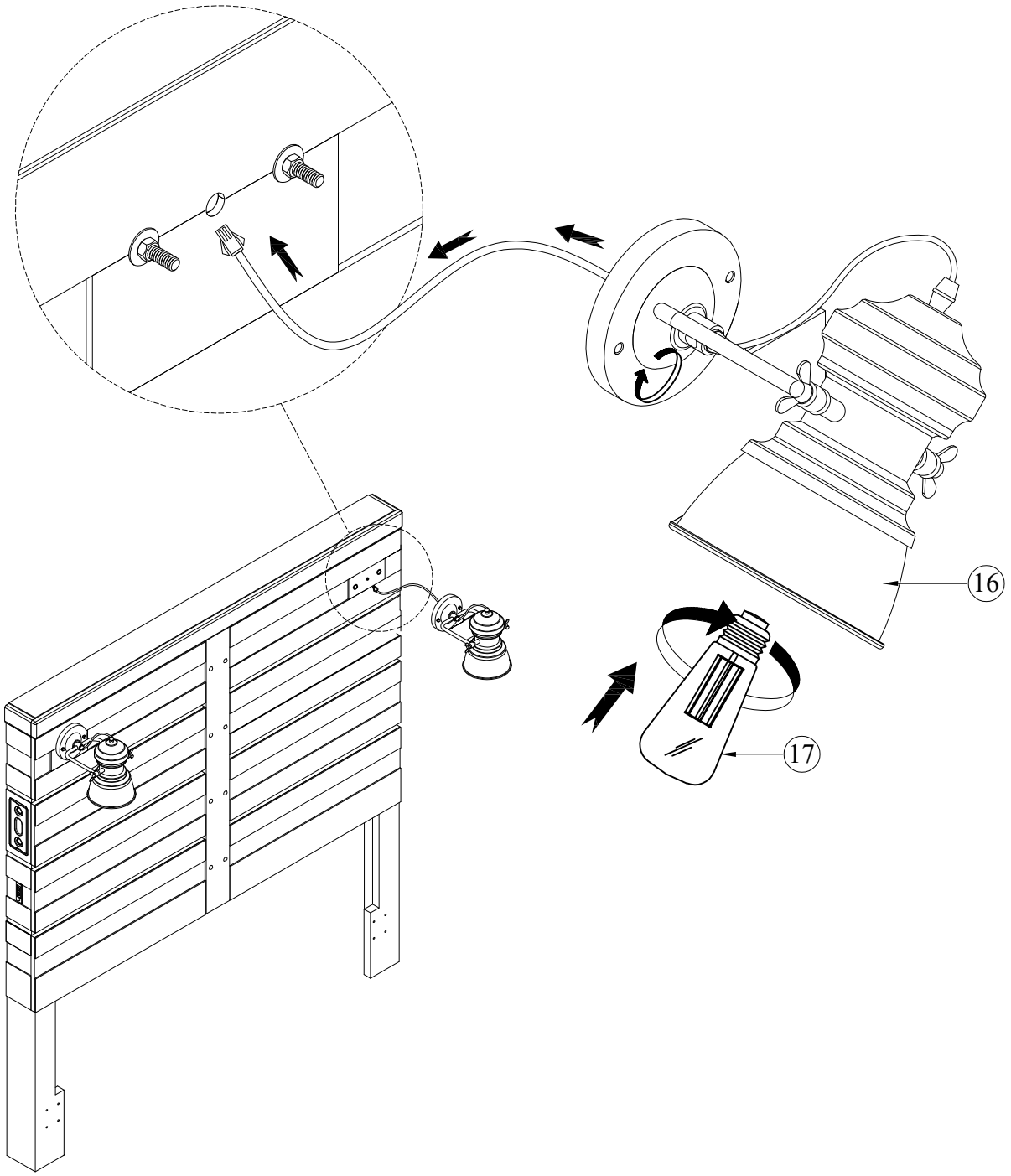

ASSEMBLY INSTRUCTIONS

"KING PANEL HEADBOARD & FOOTBOARD & SLATS"

SIDE QUEEN/ KING RAILS

NOTE: THIS ITEM NOT RECOMMENDED FOR COMMERCIAL USE
KEEP THIS DOCUMENT FOR REFERENCE IN CASE PARTS ARE NEEDED
DO NOT TIGHTEN SCREWS UNTIL COMPLETELY ASSEMBLED! !

STEP 4

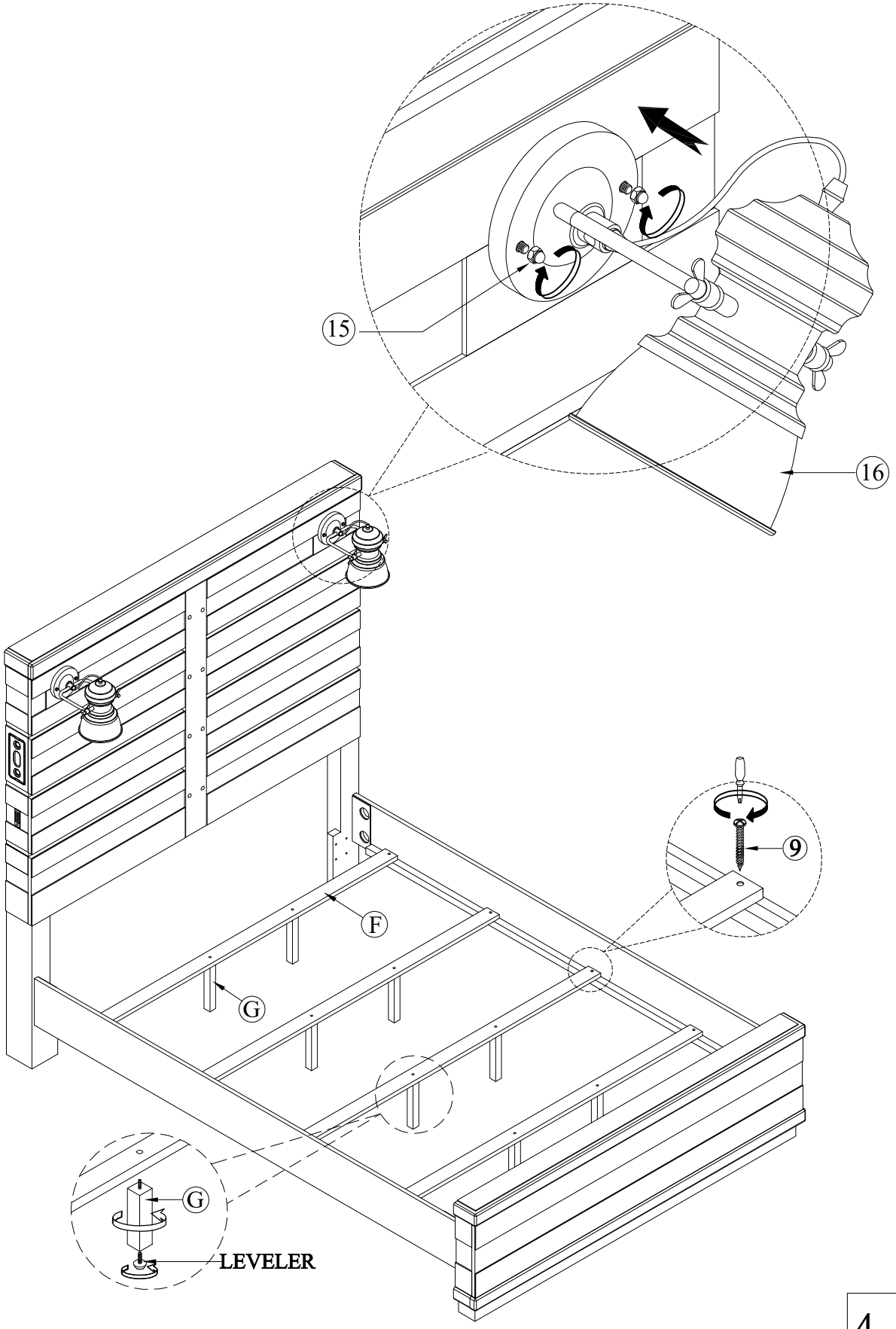

ASSEMBLY INSTRUCTIONS

"KING PANEL HEADBOARD & FOOTBOARD & SLATS"

SIDE QUEEN/ KING RAILS

NOTE: THIS ITEM NOT RECOMMENDED FOR COMMERCIAL USE
KEEP THIS DOCUMENT FOR REFERENCE IN CASE PARTS ARE NEEDED
DO NOT TIGHTEN SCREWS UNTIL COMPLETELY ASSEMBLED! !
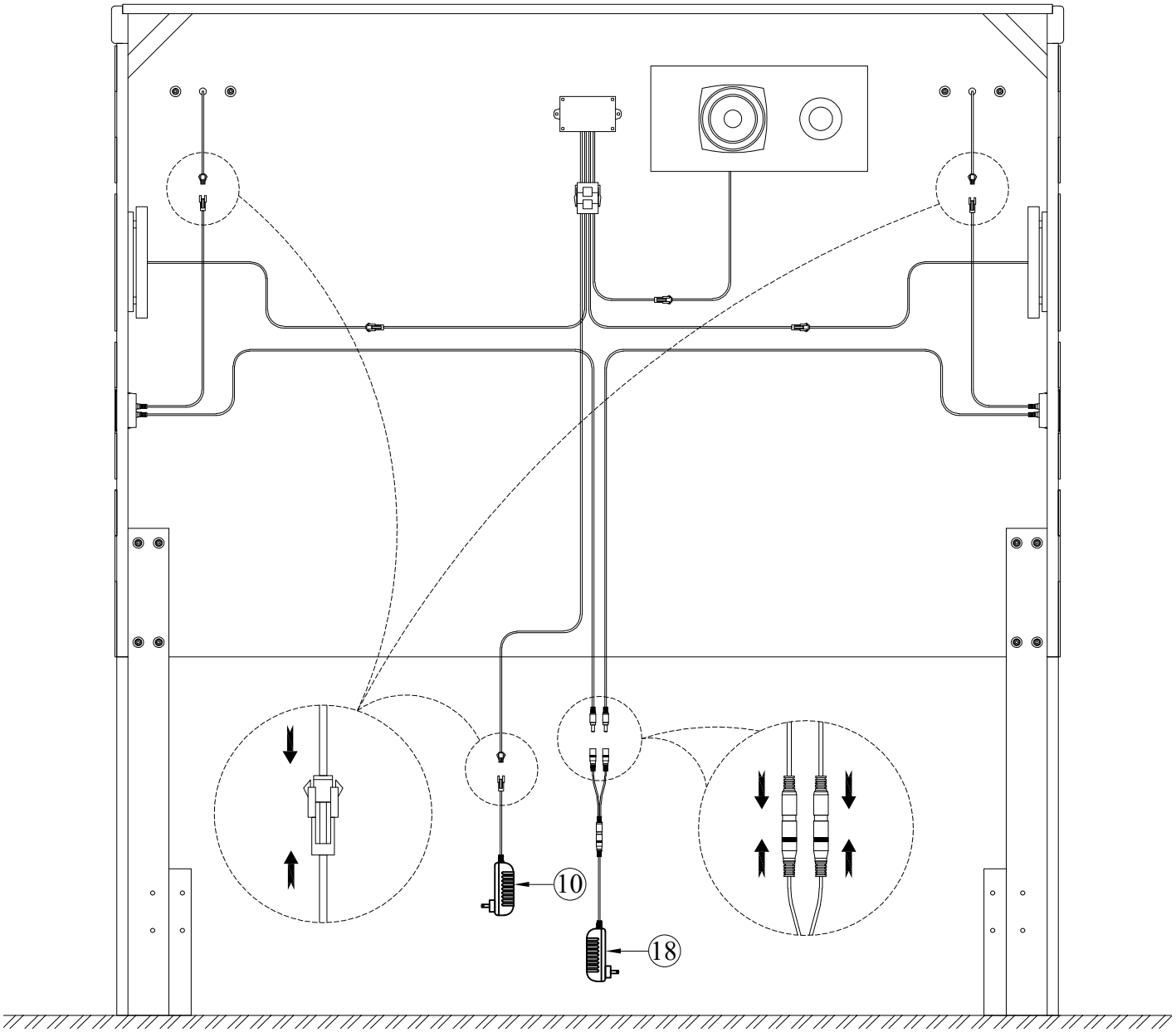
STEP 5