WYNDHAM COLLECTION

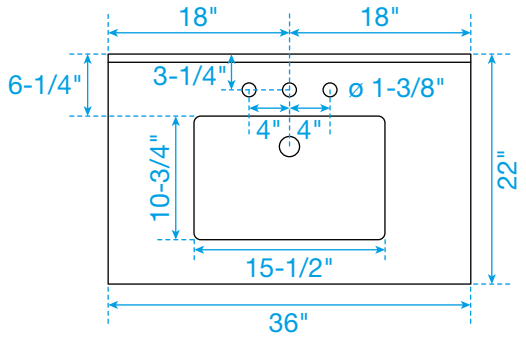

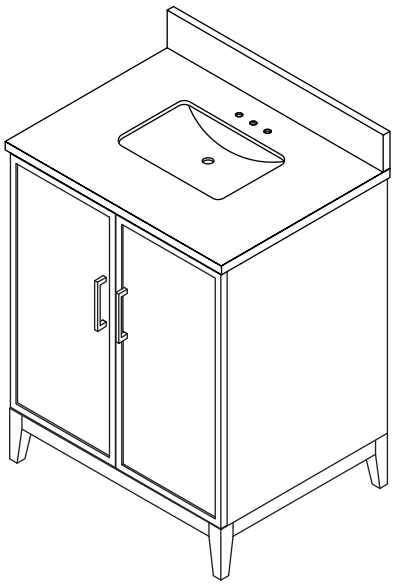

TOP VIEW OF VANITY CABINET

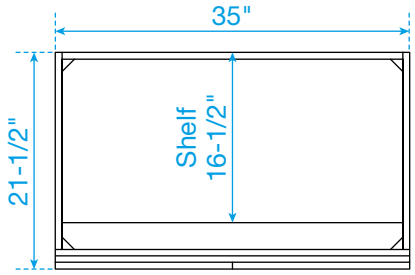

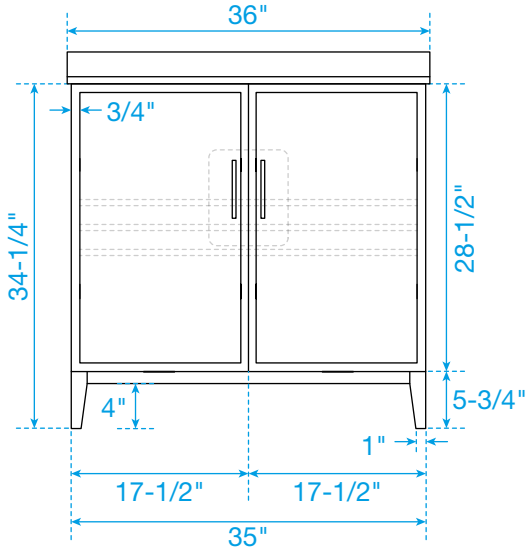

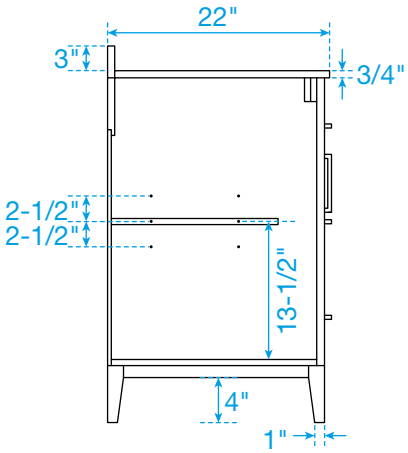

*Note: All measurements are ± 1/4".

WC-7171-36-SGL-VCA3

WYNDHAM
COLLECTION

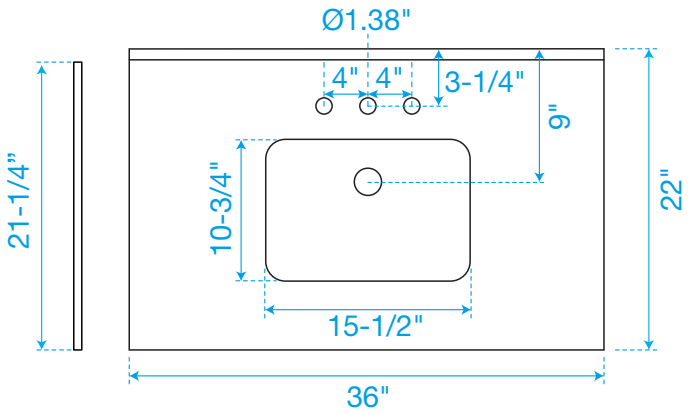

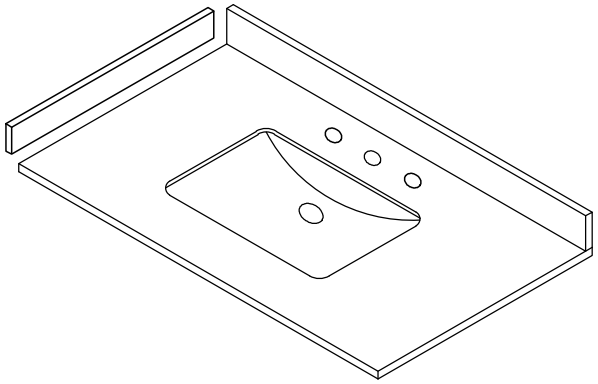

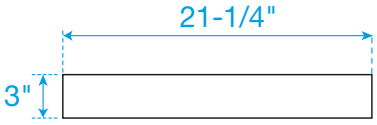

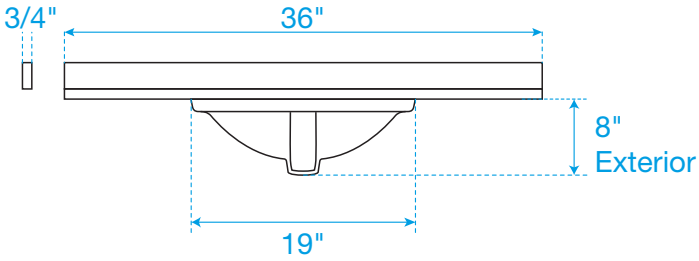

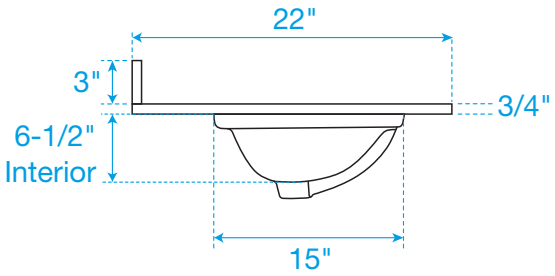

Side splash is reversible.
Note: All measurements are ± 1/4".

WC-VCA3-36-SGL-TOP