# INSTRUCTION MANUAL

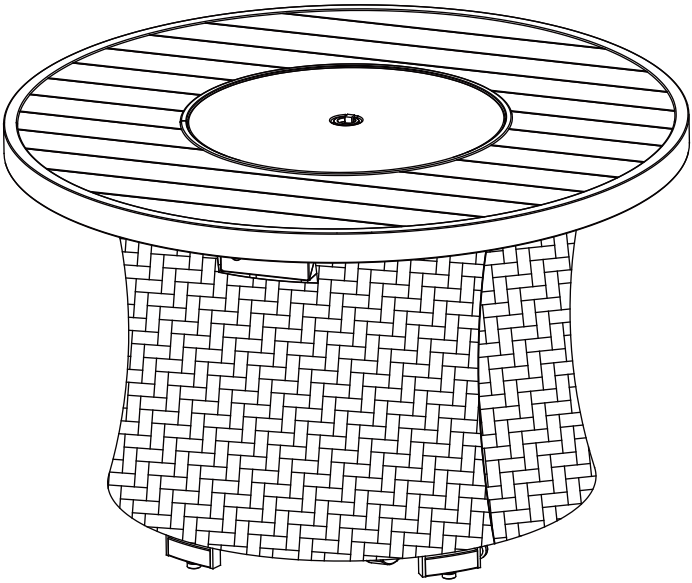

## Round Fire Pit Table

Thank you for purchasing this product. This piece of furniture is designed and manufactured with a focus on quality, innovation, and craftsmanship to provide a stylish and durable addition to your outdoor living space.

After unpacking and before every use, check whether the item shows any damage. In addition, check that you have all parts and hardware before assembly. If there is any damage, please do not use it. If any parts are missing, please contact your retailer for assistance.

This furniture is for outdoor use only. Please take time to read and follow the instructions below. Then, use this item as described in this operating manual. We accept no liability for damage caused by improper use.

## WARNING

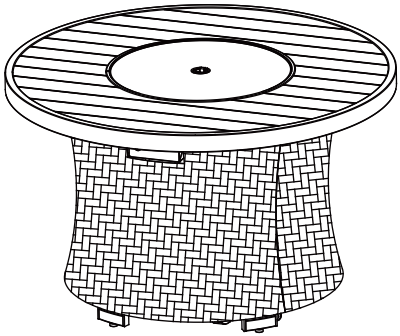

### ⚠ DANGER

**FIRE OR EXPLOSION HAZARD**
**If you smell gas:**

- **Shut off gas supply to the fire table.**
- **Extinguish any open flame.**
- **Do not try lighting any appliance.**
- **Do not touch any electrical switch; do not use any phone in your building.**
- **If odor continues, leave the area immediately.**
- **After leaving the area, call your gas supplier.**
- **Follow the gas supplier's instructions.**
- **If you cannot reach your gas supplier, call the fire department.**

**Failure to follow these instructions could result in fire or explosion, which could cause property damage, personal injury, or death.**

### ⚠ WARNING

**Do not store or use gasoline or other flammable vapors and liquids in the vicinity of this or any other appliance. An LP-cylinder not connected for use shall not be stored in the vicinity of this or any other appliance.**

### ⚠ WARNING:

**If the information in this manual is not followed exactly, a fire or explosion may result causing property damage,personal injury,or loss of life.**

### ⚠ WARNING:

**Do NOT leave this appliance unattended while it is in operation.**

### ⚠ WARNING:

**For Outdoor Use Only (outside, non-enclosed area) Do Not Use For Cooking.**
**Installation and service must be performed by a qualified installer, service agency, or the gas supplier.**

### ⚠ WARNING:

**California Proposition 65**
**Combustion by-products produced when using this product contain chemicals known to the State of California to cause cancer, birth defects, and other reproductive harm.**

### ⚠ DANGER

**CARBON MONOXIDE HAZARD**

**This appliance can produce carbon monoxide which has no odor.**

**Using it in an enclosed space can kill you.**

**Never use this appliance in an enclosed space such as a camper, tent, car or home.**

C US

DESIGN CERTIFIED

CERTIFIED

**INSTALLER:**
Leave this manual with the appliance.
**CONSUMER:**
Retain this manual for future reference.

### ⚠ WARNING

**Improper installation, adjustment, alteration, service or maintenance can cause injury or property damage.**
**Refer to the owner's information manual provided with this appliance.**
**For assistance or additional information consult a qualified installer, services agency or the gas supplier.**

## COMMON PROBLEMS & SOLUTIONS

| Problem | Cause | Solution |
|---|---|---|
| Heating unit won't light | Igniter pin and burner are wet | Dry off with a s oft cloth |
| | Igniter battery is incorrectly inserted | Chec k which direction the battery is ins erted |
| | Igniter pin is broken | Contact Bond Manufacturing for a replacement part |
| | Electrode wire is loose or disconnected | Reconnect wire to the igniter box located inside the table behind the igniter box |
| | Electrode wire is shorting between valve and igniter pin | Contact Bond Manufacturing for a replacement part |
| Burne r won't light whileusing a match | No gas flow | Check that the gas tank isn't empty |
| | Regula tor isn't connected sec urely to the tank | Tighten regulator connection to the gas tank |
| | Gas flow is obstructed | Chec k all hoses for kinks and bends |
| | Burner ports are clogged | Turn all gas flow connections offInsert an opened paperclip (or similaritem) into each of the burner ports toclear them out. |
| Heating unitemits a lot of black smoke | Flame is obstructed at burner ports | Check that all burner ports are free of any small lava rocks/pumice stones/La va- G lass ™ pieces |
| | Regulator hose is kinked | Straighten hose of all bends or kinks |
| Sudden drop in gas flow | No gas flow | Check that the gas tank isn't empty |
| | Excess flow safety valve has been activated | Turn the control knob to the 'off ' position. Close the tank valve and disconnect propane gas tank. Turn the control knobto 'high'; wait 1 minute. Turn the control knob back to the'off ' position. Reconnect propane gas tank. Light the fire unitas indicated in the ' Toight ' section of this manual. |
| Flame blowsout easily | High or gusting winds | Increase flame to ' high ' |
| | No gas flow | Check that the gas tank isn't empty |
| | Excess flow safety valve has been activated | See 'sudden drop in gas flow' above |

## LIGHT

1.Read instructions before lighting.
2.Control knob must be in the “OFF” position.
3.Connect propane cylinder (See Manual), open cylinder valve.
4.Push and turn control knob counter clockwise to “LOW”.
5.Press the igniter button repeatedly to light burner.
6.Release control knob after 45 seconds.
7.If ignition does not occur in 45 seconds, push and turn burner control knob to “OFF”, wait 5minutes, fan with newspaper or magazine, and repeat lighting procedure.
8.If igniter does not light burner, use a long match or long butane lighter.
9.After burner ignites, adjust flame to desired flame with the control knob.

## EXTINGUISH

1.Turn and push the control knob clockwise to the OFF position.
2.Close cylinder valve, disconnect propane cylinder.

## MAINTENANCE

• Before performing any maintenance always disconnect propane gas tank.
• Visually inspect burner for obstructions and keep tank enclosure free and clear from debris.
• Use a soft brush to get rid of the mild stains, loose dirt and soil after the burner and pumice stones/ lava rocks/LavaGlass™ are completely cooleddown. Wipe down with a soft cloth.
• Harsh weather conditions may cause stubborn stains,discoloration and possibly rust pitting.
• Permanent damage may occur if powder or solvent comes in contact with painted or plastic components on this heating unit.
• Keep the heating unit st ored away from direct sunlight .
• If storing this unit inside, disconnect t he propane gas t ank from the gas valve.
• Always place lid (if applicable) or protective cover on heating item when not in use.

## IMPPRTANT SAFETY INFORMATION

It is UNSAFE to use this product for any purpose except as described in this document including, without limitation, cooking.

**CAUTION**: The propane gas pressure regulator provided with this appliance must be used. This regulator is set for an outlet pressure of 11 inches water column.

This outdoor gas appliance is not intended to be installed in or on recreational vehicles and/or boats.

Before each use of this gas appliance, open the LP (Liquid Propane) Tank Drawer and inspect the LP Hose. If there is evidence of excessive abrasion or wear, or the hose is cut, it must be replaced prior to the gas appliance being put into operation. Use only the replacement hose assembly specified in this manual. Inspect the burner before each use of the appliance. The burner must be replaced prior to the appliance being put into operation if it is evident that the burner is damaged. Use only the burner listed in these instructions.

Keep the fuel supply hose away from any heated surfaces.

If you have any questions regarding the use of this unit, or if your fire pit unit requires service, please contact customer support for assistance.

The installation must conform with local codes or, in the absence of all applicable local codes, including, without limitation, with the National Fu el Gas Code, ANSI Z223.1/NFP A 54; International Fuel Gas Code; Natural Gas and Propane Installation Code, CSA B149.1; or Propane Storage and Handling Code, B149.2, as applicable.

The appliance and its appliance main gas valve must be disconnected from the gas supply piping system during any pressure testing of that system at test pressures in excess of 1/2 psi (3.5kPa).

The appliance must be isolated from the gas supply piping system by closing its equipment shutoff valve during any pressure testing of the gas supply system at test pressure equal to or less than 1/2 psi (3.5kPa).

The appliance area must be kept clear and free from combustible materials, gasoline and other flammable vapors and liquids.

Do not use this appliance if any part has been damaged or under water. Immediately call a qualified service technician to inspect. Immediately call a qualified service technician to inspect the appliance and to replace any part of the control system and any gas control which has been damaged or under water.

## IMPPRTANT SAFETY INFORMATION

**Do not sit or stand on appliance even when not in use and do not touch appliance while in use or for at least 45 minutes after use as the appliance is very hot during use and can cause serious burns.**

**The appliance will remain hot for up to 45 minutes after use. Do not touch or move appliance for at least 45 minutes after it has been completely shut off.**

**Children and adults should be alerted to the hazards of high surface temperatures and kept at a safe distance to avoid burns or clothing ignition.**

**All children should be kept away from the appliance and should not be allowed near the product unless carefully supervised by an adult.**

**Clothing, any other object or flammable material should not be hung from the appliance, placed on, near or underneath the appliance.**

**Any screen or guard removed for servicing an appliance must be replaced prior to operating the appliance.**

**Keep children away from this appliance. This appliance contains small parts that can be swallowed by children resulting in serious bodily injury or death.**

**Installation and repair should be done by a qualified service person. The appliance should be inspected before use and at least annually by a professional service person. More frequent cleaning may be required as necessary. It is imperative that the control compartments, burners and circulating air passageways of the appliance be kept clean.**

Do NOT burn solid fuels in this gas fireplace.

Do NOT ignite the burner before pouring all of the burner media (lava rock or fire ice) into the burner pan. The media must be evenly distributed over the burner.

If during initial firing of fire pit, please stay away from the fire pit for 20 minutes as fire media (lava rock or fire ice) may pop and hit someone on the face or eyes

Do NOT ignite or use the fire pit if the burner media (lava rock or fire ice) are wet. Ensure the burner media are completely dry before igniting as intense heat could cause the media to crack and pop. Always place the cover on the appliance when not in use in order to avoid water contacting the media.

**Prior to turning gas on and attempting to light the appliance, make sure the appliance isoutside, in a well ventilated area and free of any debris and is not in contact with or near anypeople, animals, materials or structures. Failure to adhere to the above instruction mayresult in property damage, serious bodily injury or death.**

**1.** Open the door, place the cylinder into the main body and tighten it as shown on the right, so the gas cylinder cannot move and fall down, close the door.

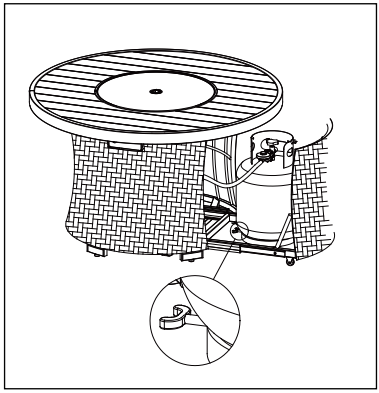

**2.** Pour the box of lava glasses (N) into the fire pit table top (A) around.

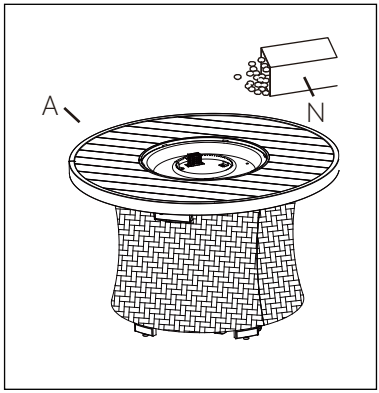


DANGER
WARNING To ensure proper function, the guard on this burner should be free of lava rocks at all times.

**3.** Connect gas bottle
Note: Turn off the switch of cylinder (No spanner is required)
The height of the gas cylinder is below the 80cm, and the width is within 35cm

**How to connect a gas bottle**.

a)Turn the orange cap so that the arrow is pointing to the gap in the shroud.
b)Remove the orange safety cap by pulling the lanyard out, then out.
Do not use tools. Leave the cap hanging.
c)Check that the black sealing washer is fitted inside the cylinder valve.
Connect the regulator to the valve.

d)Turn the switch clockwise on gas bottle-then turn on the gas grill as instructed.

Apply a solution of soapy water to the tank-regulator connection and to the valve-house connection to check for leaks. If soap bubbles continue to form, the connection has a leak. If a leak is found, close the tank valve and tighten allconnections.

## BATTERIES

Make sure the control knob is in the "OFF" position.

Unscrew the push button cap on the ignition module located on the control panel to access the battery compartment.

The ignition module requires one AAA size battery.

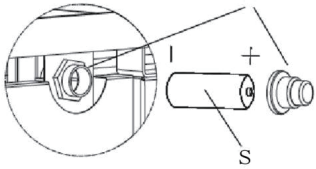

## CARE AND MAINTENANCE

Follow the instructions for the product's material to ensure it stays in the best shape as long as possible. The information below is a general guideline. Don't hesitate to get in touch with us to learn more.

• Only rinse it thoroughly with clean water to wash away dirt and grime. Never use abrasive cleansers on the furniture since they can attack the surface and leave behind scratch marks.

• For stubborn grime and stains, use a soft sponge and mild soapy water. Then dry it with a cloth or paper towel.

• Check the stability of the screws, nuts, and nut caps before each use. Then, tighten them up after one to two months' use whenever required.

• Avoid improper use, and be careful not to scratch or damage the surface with sharp objects.

• When you move your furniture, lift it rather than pulling or pushing it to avoid damaging the floor, legs, and mounting.