Assembly Instruction

Step:2

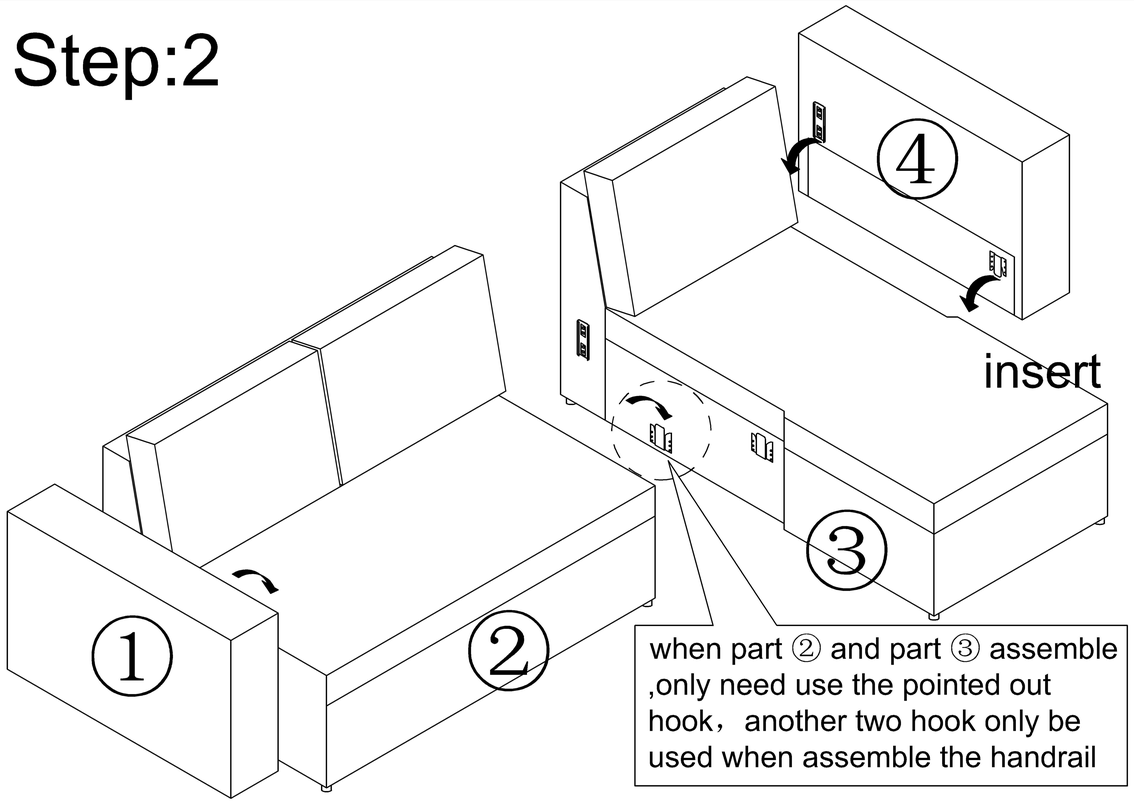

Step:3

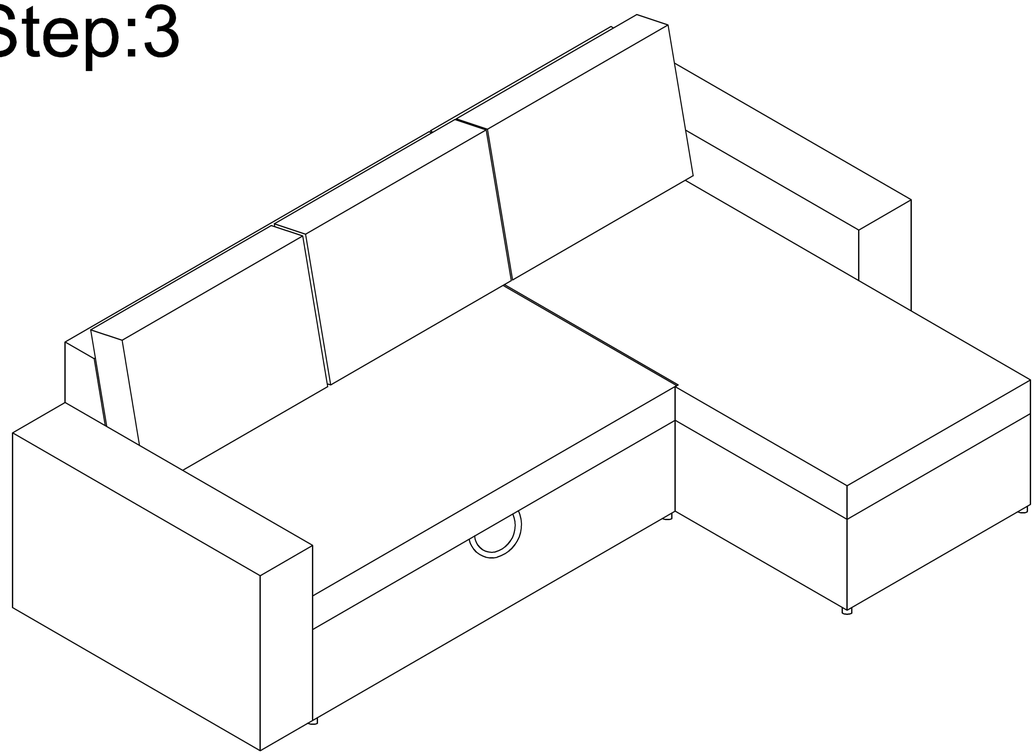

Step:4

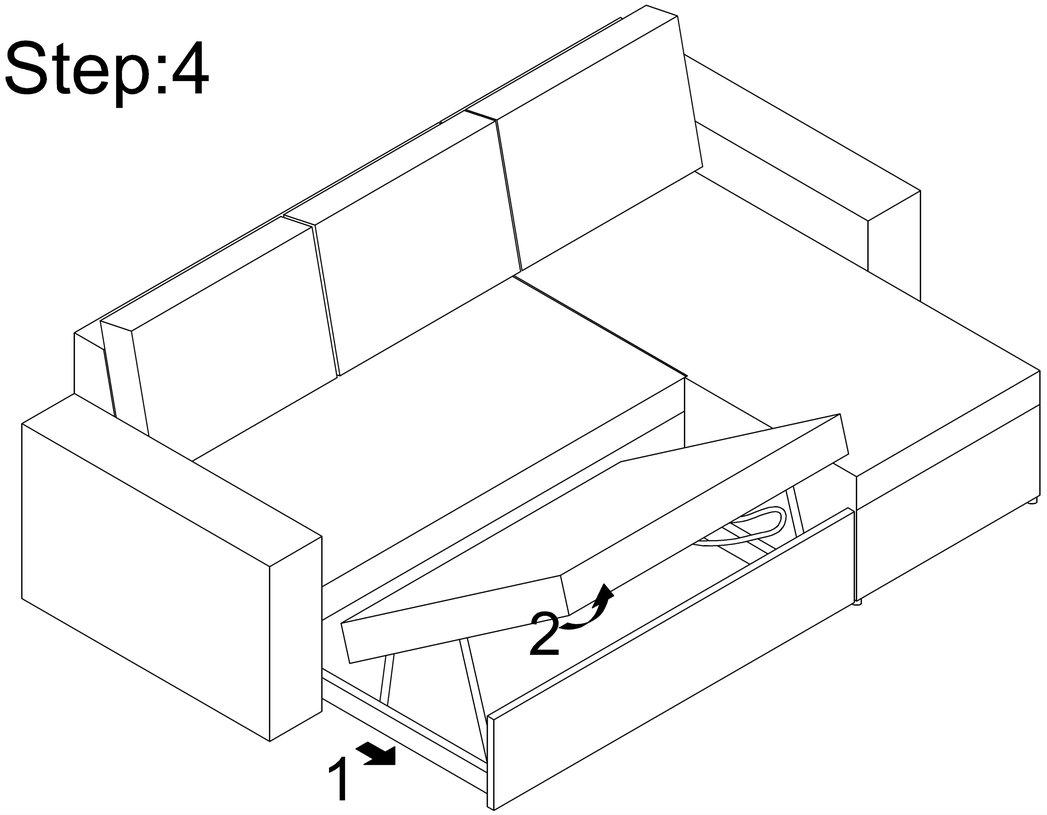

Step:5

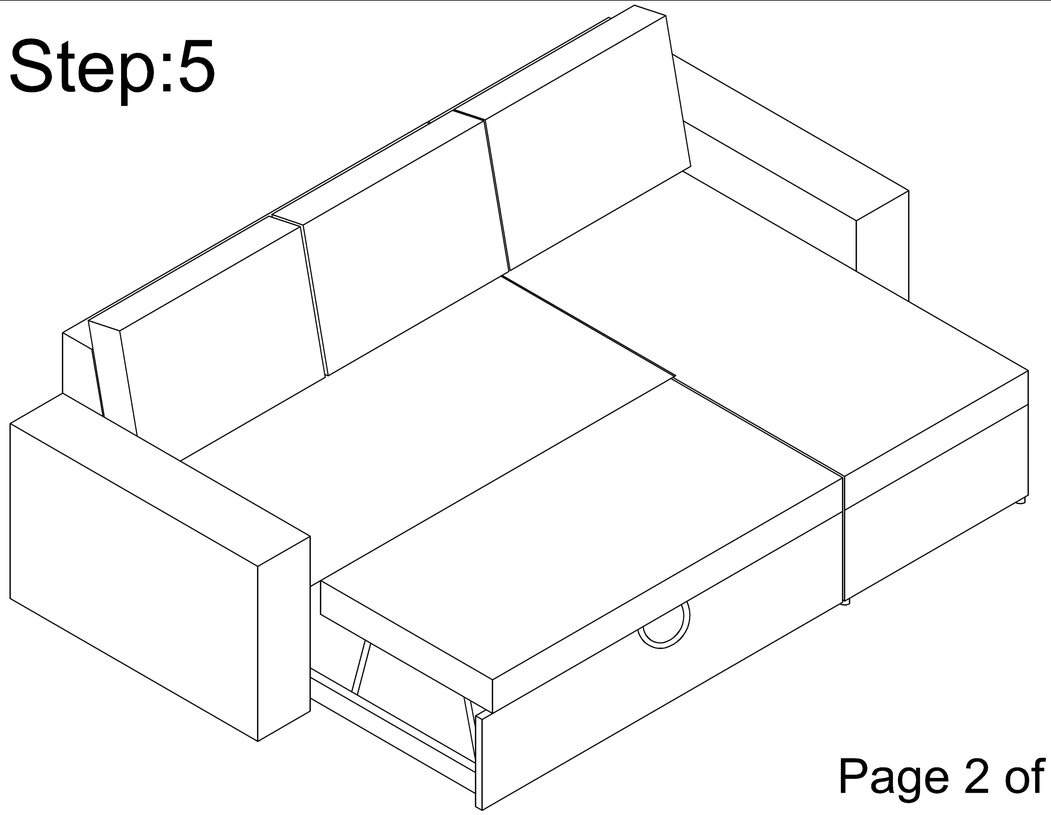

Assembly Instruction

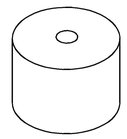			
J.8PCS	K.4PCS	5CM C.8PCS	2.5CM D.12PCS

Step:1

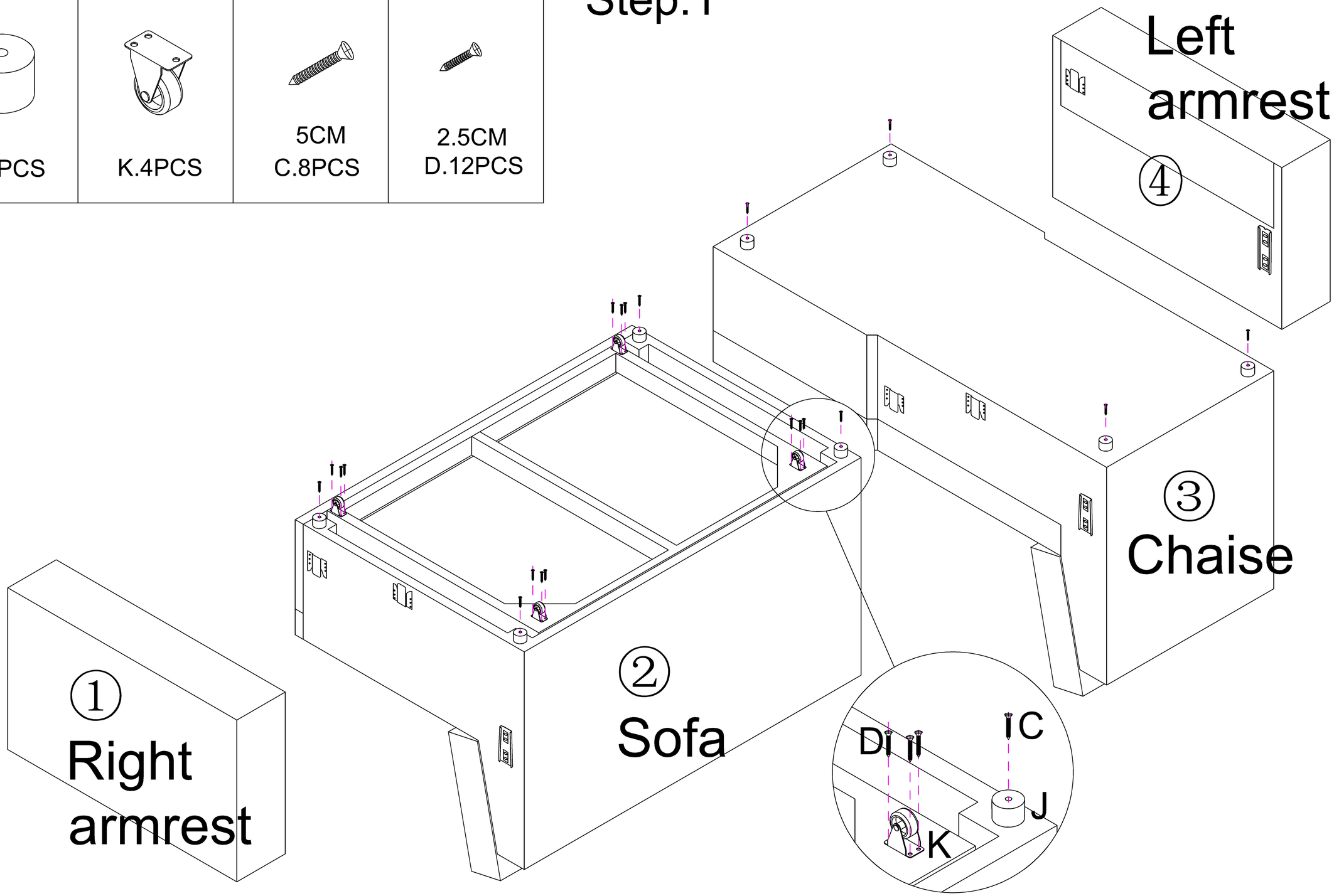

Assembly Instruction

Step:6

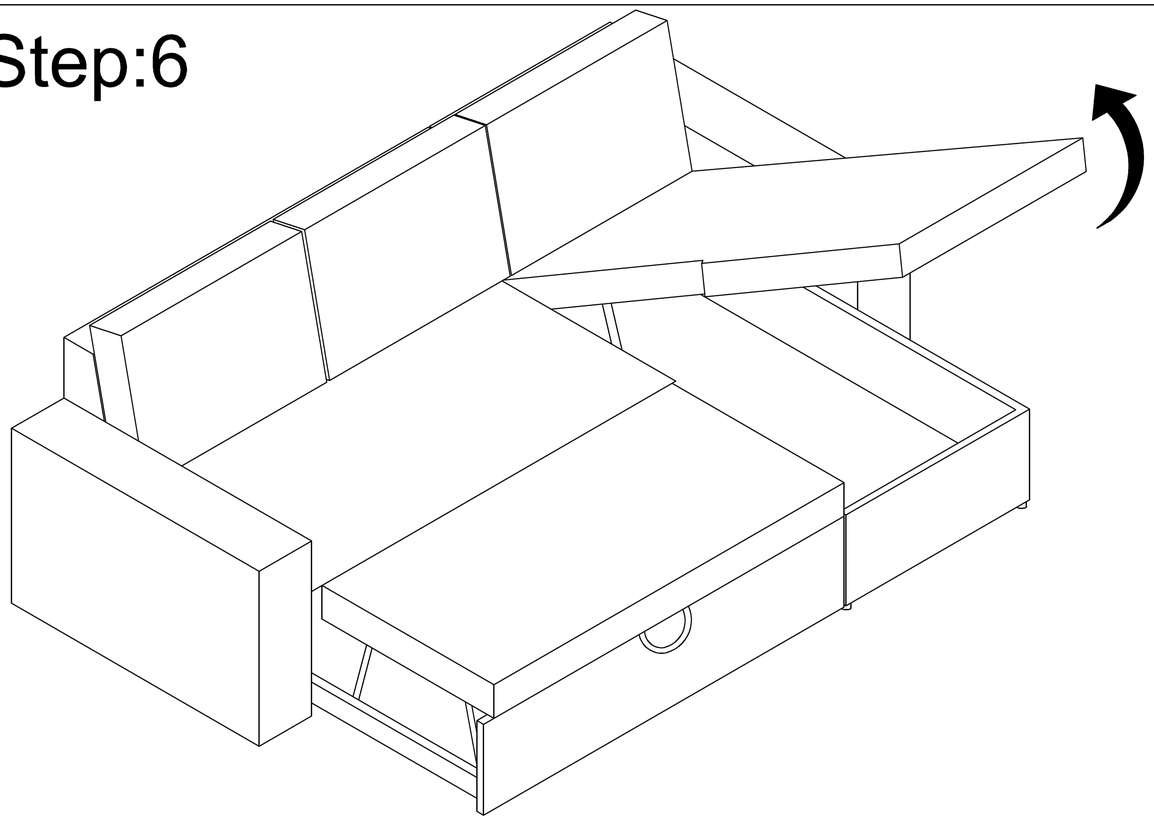
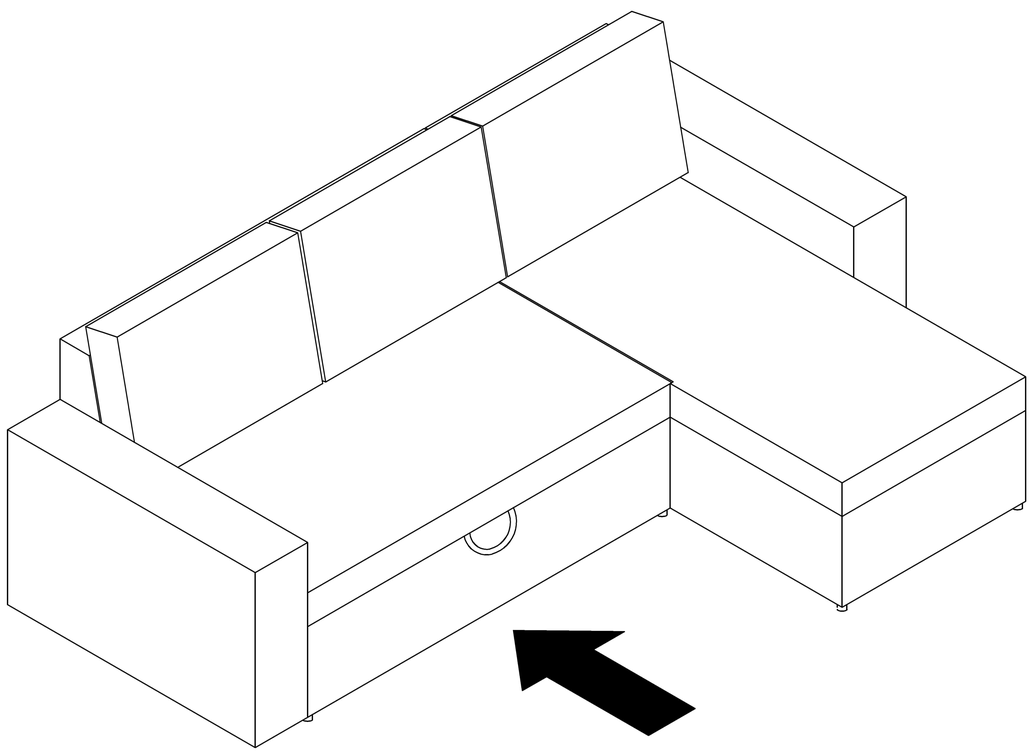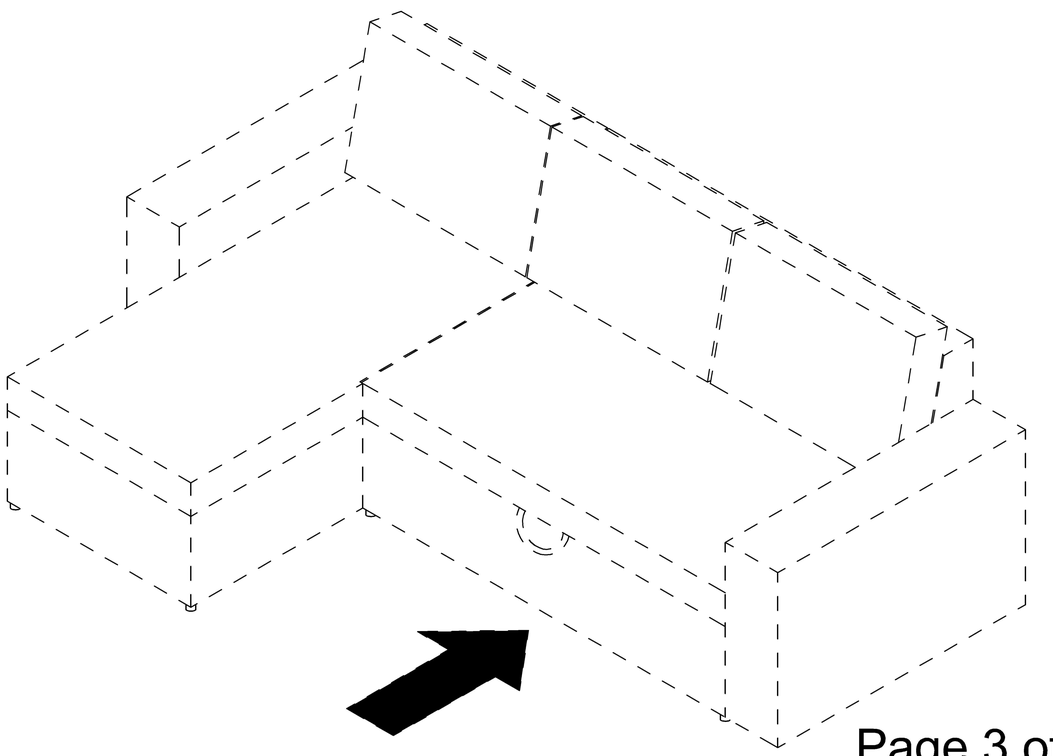
After armrest been taken away, sofa and chaise can change the position,then assemble the armrest again to be a new style.