LACAVA

KUBITOP
vanity-top sink
K72

Specifications:

Installation:	Vanity-top
Exterior Dimensions:	72”w x 22”d x 6 1/4”h
Material:	Solid surface
Weight:	Matte white - 64 lbs Gloss white - 80 lbs
Overflow:	Yes
Finishes:	M - Matte white G - Gloss white
Faucet Holes:	00 - no hole 01 - one centered hole 02 - two hole - center and right, 4” spread 03 - three hole, 8” spread
Faucet Hole Size:	Ø 1 3/8”
Drain Hole Size:	Ø 1 3/4”
Cutout Size:	70” x 20” (template available upon request)

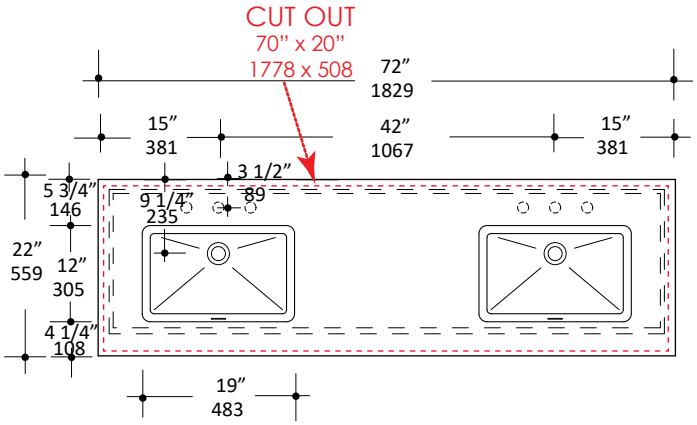

Features:

- European size drain
- Stain, scratch, chemical, impact resistant
- Optional backsplash available

Codes + Standards:

- Meets and exceeds applicable national codes and standards

ADA compliant when installed to specific requirements of this regulation

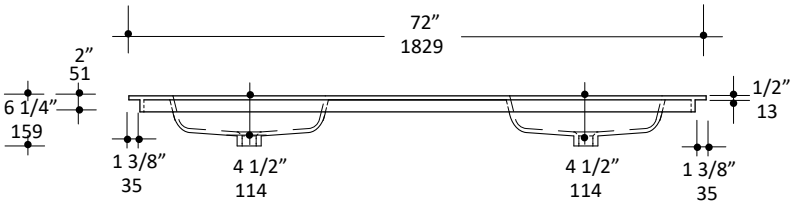

Recommended Items:

- Furniture
  - KUB-W-72 - Floor-standing or wall mounted vanity with drawers
  - BKS - 6” Backsplash G - gloss, M - matte
- European drain with overflow
  - 7100-12
  - 7100-16OF
  - 7100-13OF

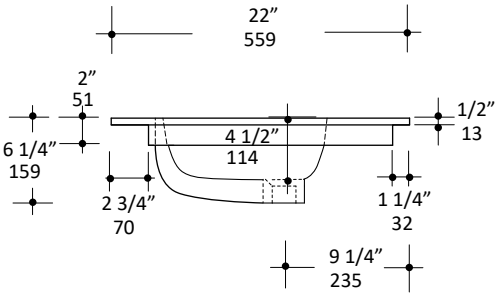

Care + Maintenance:

- To prevent damage to the solid surface material, hot objects and open flame should not be placed in direct contact with the surface

Click Here to find out more about proper care and maintenance

LACAVA reserves the right to revise any dimension or information on this sheet without notice. Dimensions are nominal and may vary within an industry accepted tolerance of 1/4”.
Drawings provided herein are meant to give the user an idea of the product and are not made to scale.
Revised: 8/12/2019