MS311 Series

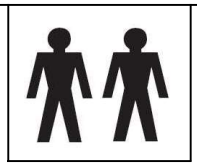
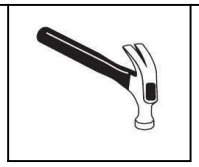
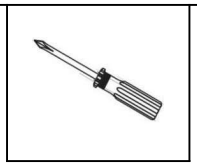
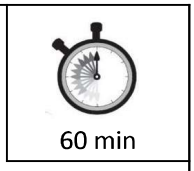

Thank you for choosing this furniture.
PLEASE RETAIN PACKAGING UNTIL YOU HAVE COMPLETED ASSEMBLY.
Information about your furniture.
Our furniture ranges have been carefully crafted from solid wood and natural wood veneers. Each piece of furniture has unique characteristics such as knots, variances and granning. These are part of the natural character of the furniture itself.

Caring for your furniture.
Extreme temperature can cause slight movements in the wood itself so please avoid placing your furniture close to radiators or other direct sources of heat. Humidity should also be avoided. Please avoid exposing your furniture to continued bright sunlight as it can affect the colour. Any fluid should be removed as quickly as possible. Always lift your furniture when moving, as dragging can cause damage to your furniture or flooring. Extreme changes in temperature & humidity during transit may result in a powder residue forming so silica gel bags have been included to alleviate this natural occurrence. This residue is harmless and can easily be removed before assembly with a damp cloth and mild detergent.
After care.
Wipe the surfaces with a dry cloth and an occasional use of normal household polish. We also recommend you use household spray polish occasionally on the drawer grooves and runners as this will aid use. Please do not use detergents or chemicals on your furniture.

Before you start assembly.
Please check that you have all the correct parts and fittings as detailed above. In the unlikely event of a part being damaged or missing please mark the component or part on the diagrams above and email to support@mountainsideproducts.com
Please provide the following information so that your request can be dealt with ASAP
*** Name * Address * Post Code * Telephone number * Batch number (to be found at the bottom left of this page)**

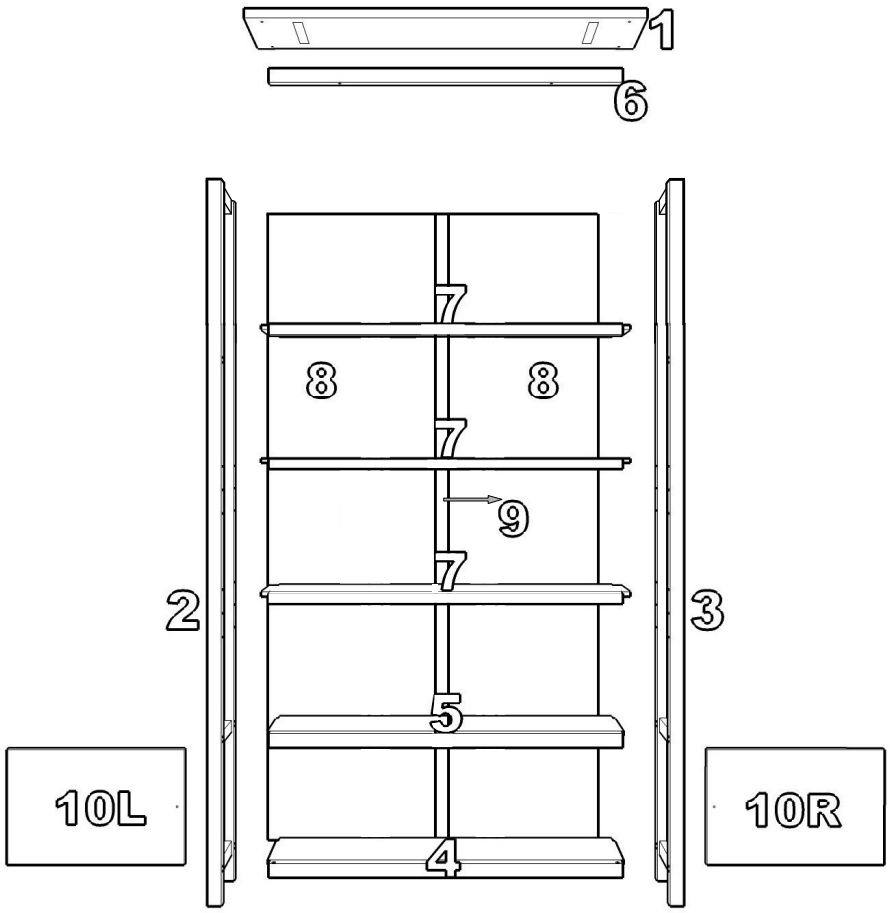

A = x24
Dowel

B = x14
40mm Screw

D = x28
Nail

E = x16
Brackets

F = x2
Bolt

G = x2
Handle

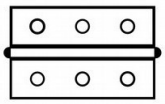
M = 2x
Hinge Pair Set

BATCH No.

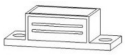
J = x2
Mag. Catch

H = x4
15mm screw

N = 12x
Hinge screw

1

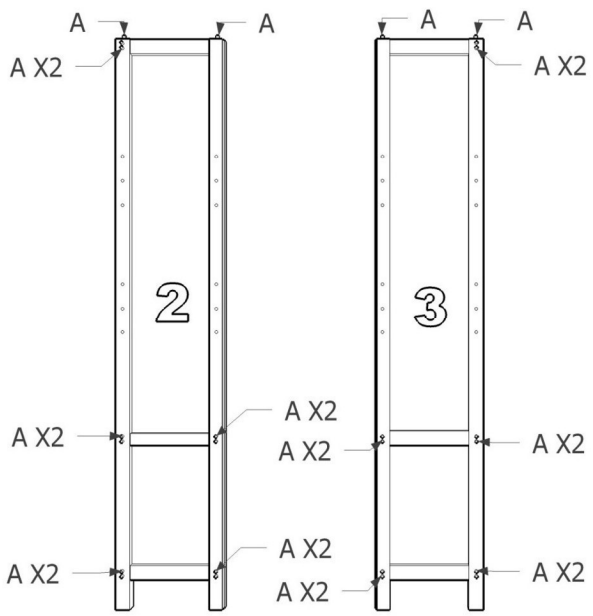

A = x24
Small Dowel

2

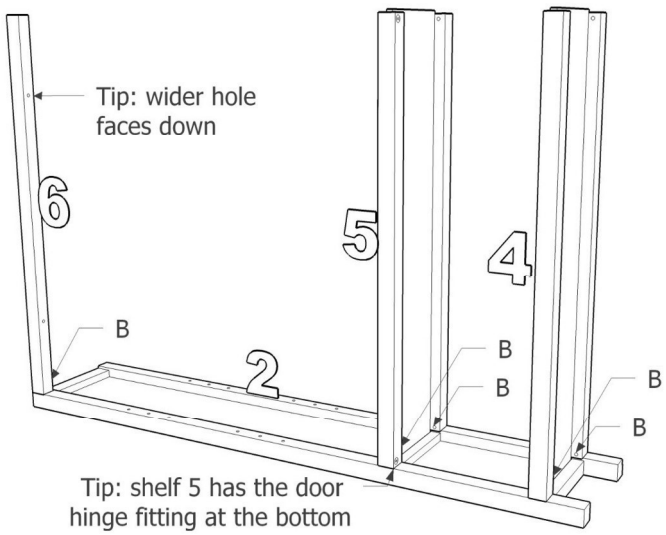

B = x5
40mm Screw

3

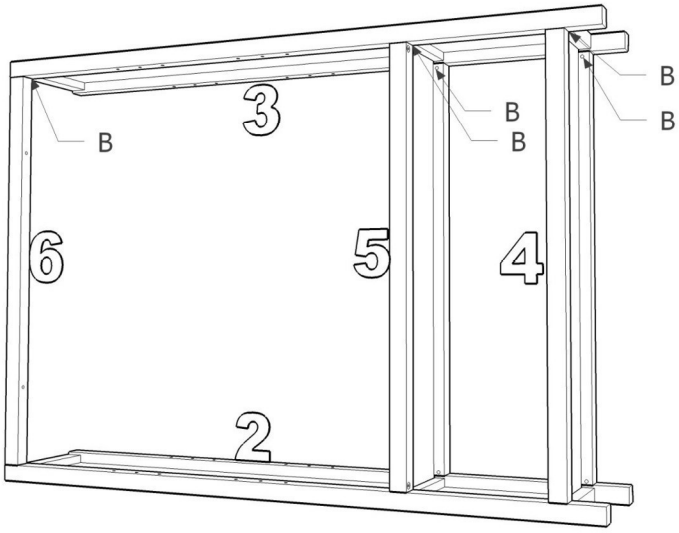

B = x5
40mm Screw

4

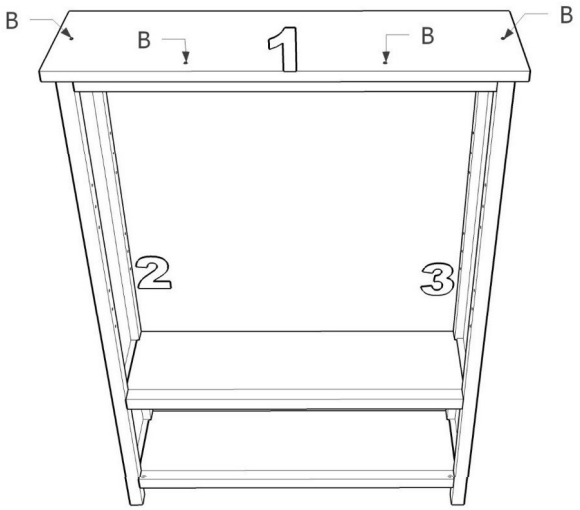

B = x4
40mm Screw

5

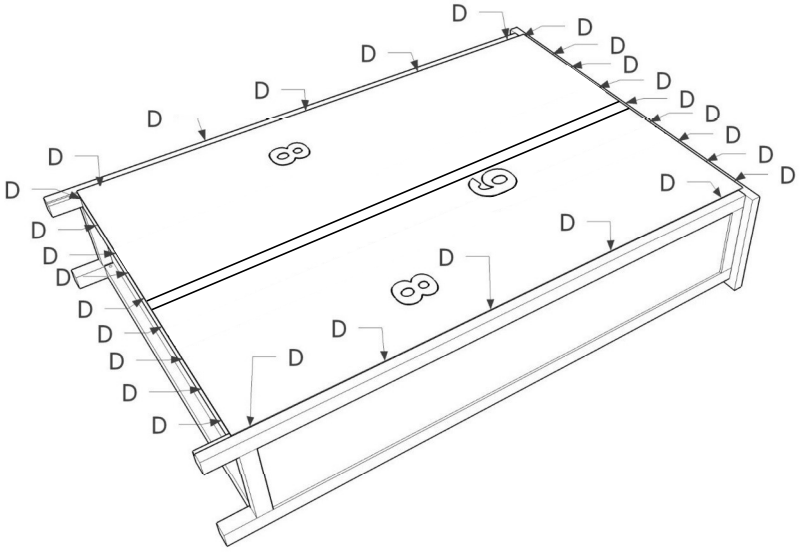

D = x28
Nail

6

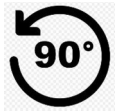

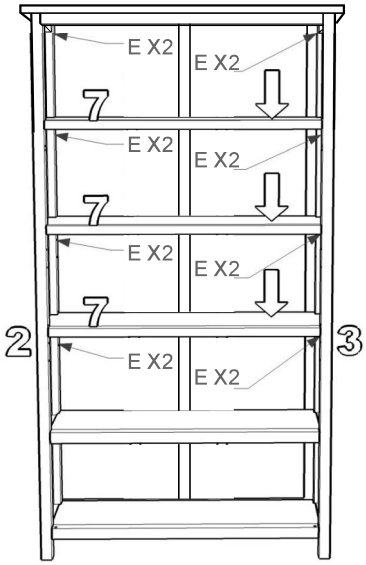

E = x16
Brackets

7

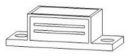

J = x2
Mag. Catch

H = x4
15mm screw

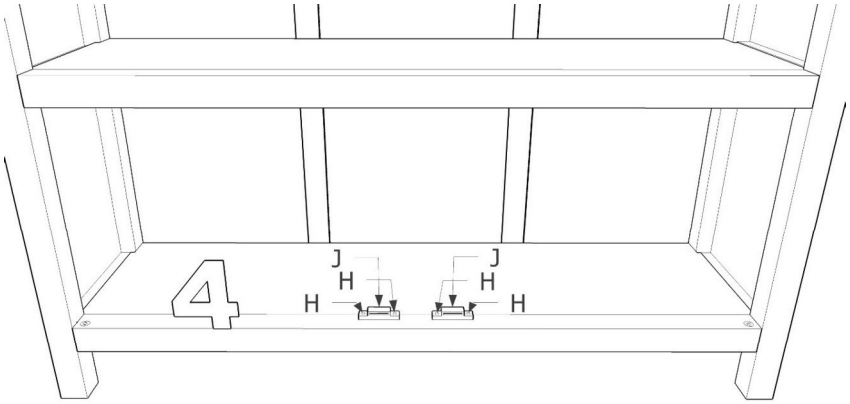

8

N = 6x
Hinge screw

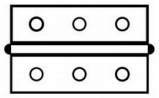

M = 1x
Hinge Pair Set

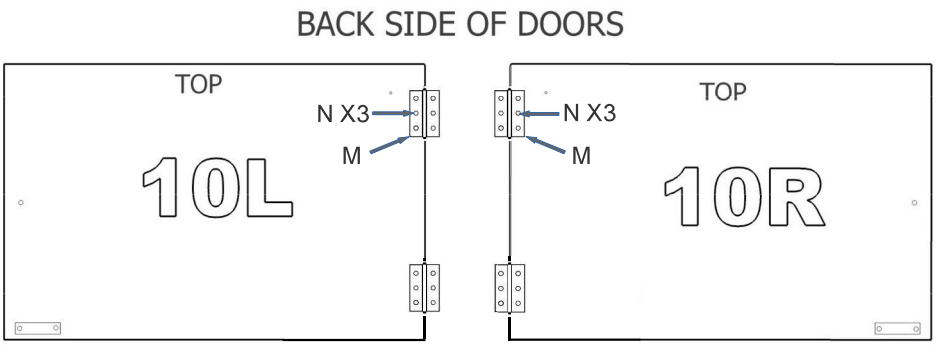

9

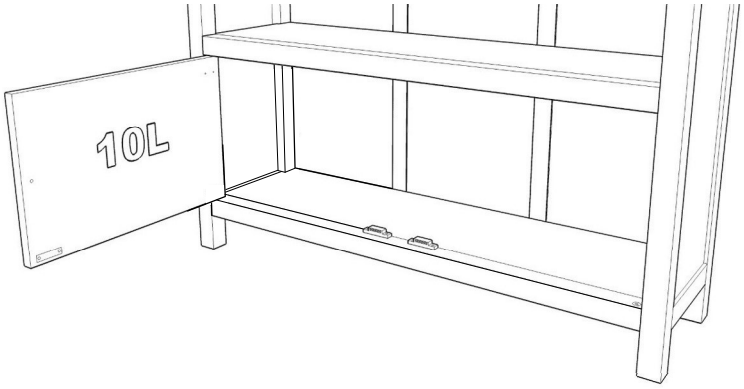

10

N = 3x
Hinge screw

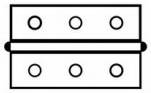

M = 1x
Hinge

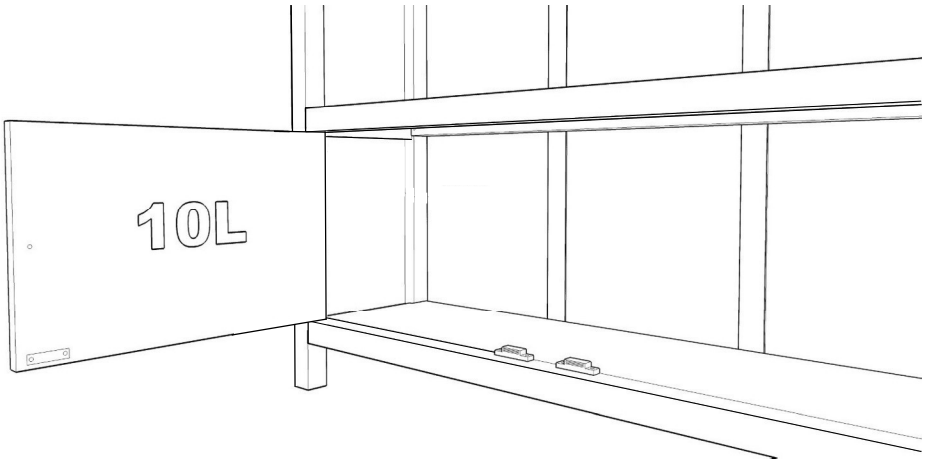

REPEAT STEPS 9 & 10 TO FIT RIGHT DOOR – 10R

IF A DOOR NEEDS ADJUSTING ITS POSITION, SIMPLY LOOSEN THE HINGE SCREWS AND REPOSITION DOOR AS REQUIRED

11

F = x2
Bolt

G = x2
Handle

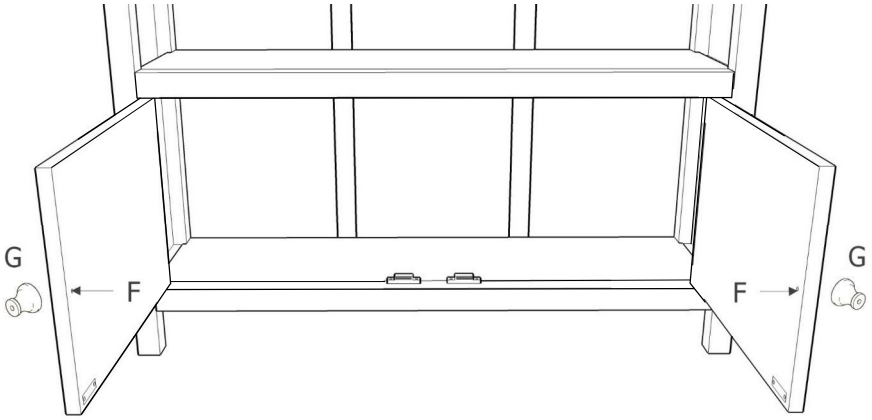

WARNING! TIPPING HAZARD – Unanchored furniture can tip over

WARNING: CHECK FOR HIDDEN PIPES AND CABLES BEFORE DRILLING.

IMPORTANT: IF YOUR WALLS ARE NOT SOLID LIKE BRICK OR STONE, YOU WILL REQUIRE SPECIALIST FITTINGS (NOT SUPPLIED)

- Place fixing strip against the wall and mark position for drilling hole.
- Drill hole in your wall to a depth of 30mm using a 6mm drill bit. If the surface of your wall is soft and crumbly, we would advise you to use a 5mm drill bit for a tighter fit.
- Insert plug into hole with end flush to the wall surface;
- Attach fixing strip to the wall using the 25mm screw + washer and securely tighten;
- Pre-drill small pilot hole on the back edge of the furniture top using a 2mm drill bit. Attach the other end of the fixing strip to the back edge of the furniture top using the 15mm screw + washer and securely tighten.

12

C = x1
30mm Screw

X = x1
15mm Screw

Z = x2
Washer

Y = x1
Wall Tie

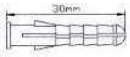
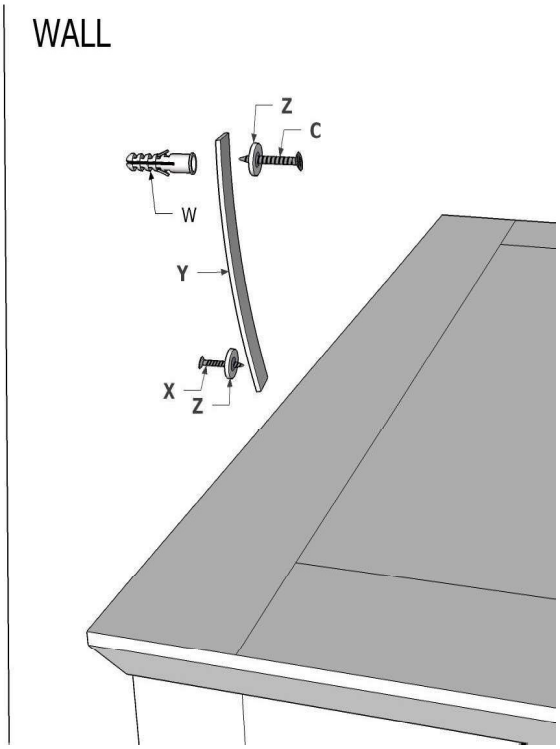
W = x1
Wall Plug