COFFEE TABLE

ASSEMBLY INSTRUCTIONS

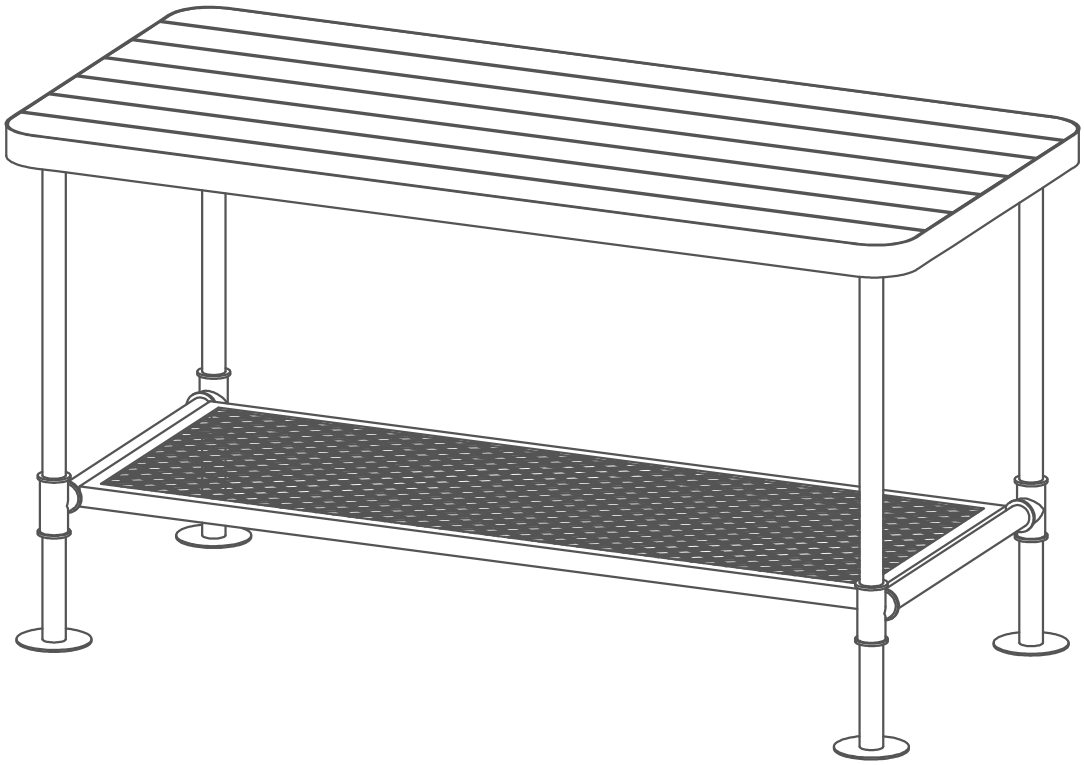

PLEASE READ ME FIRST

- Have questions about assembling your item?

- Item or parts damaged?

- Missing a part?

- We're here to help!

A	B	C	D	E
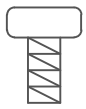	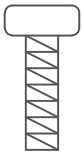			
□□PCS	4PCS	□6PCS	□6PCS	□PC

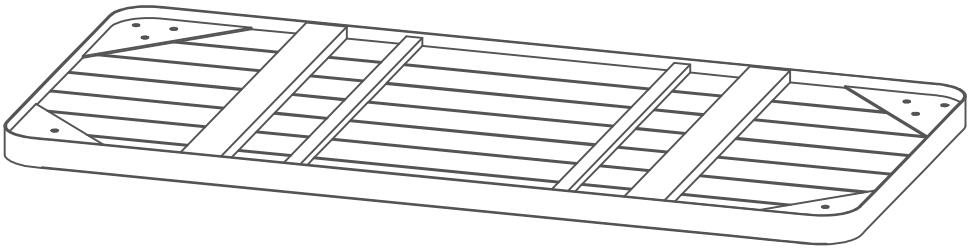

①

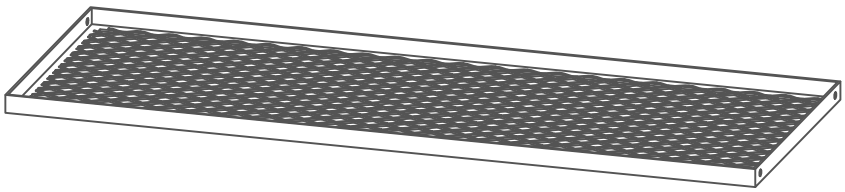

②

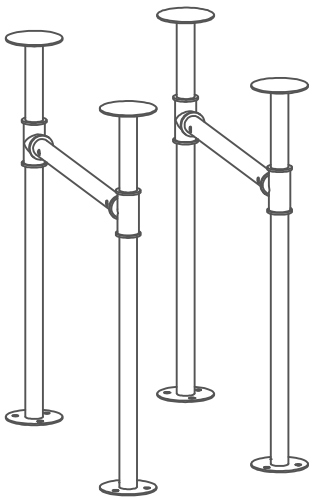

③

01

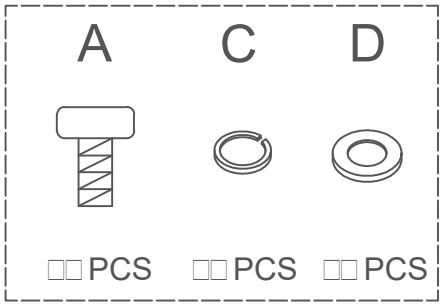

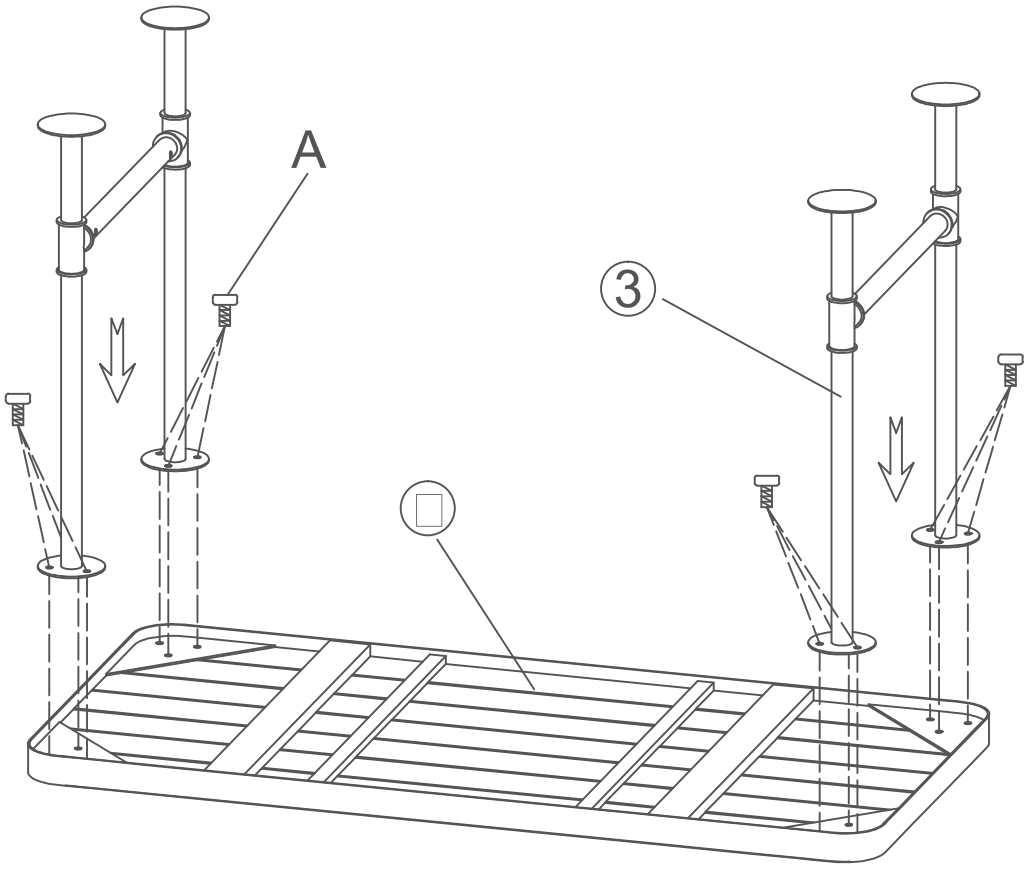

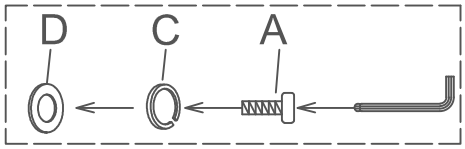

DO □OT TIGHTE□
BOLT COMPLETELY

02

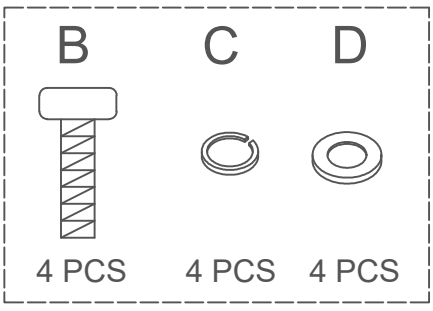

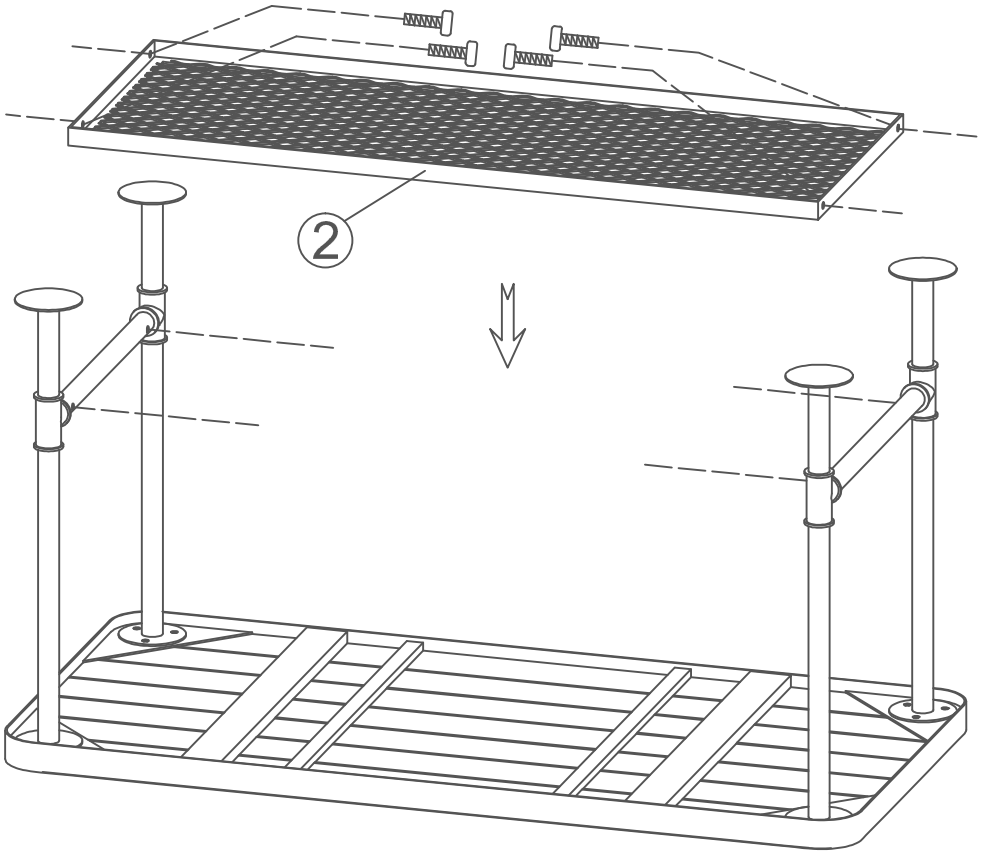

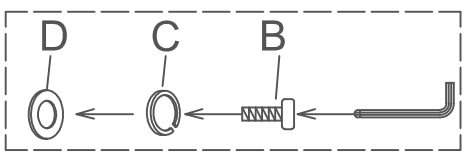

DO □OT TIGHTE□
BOLT COMPLETELY

03

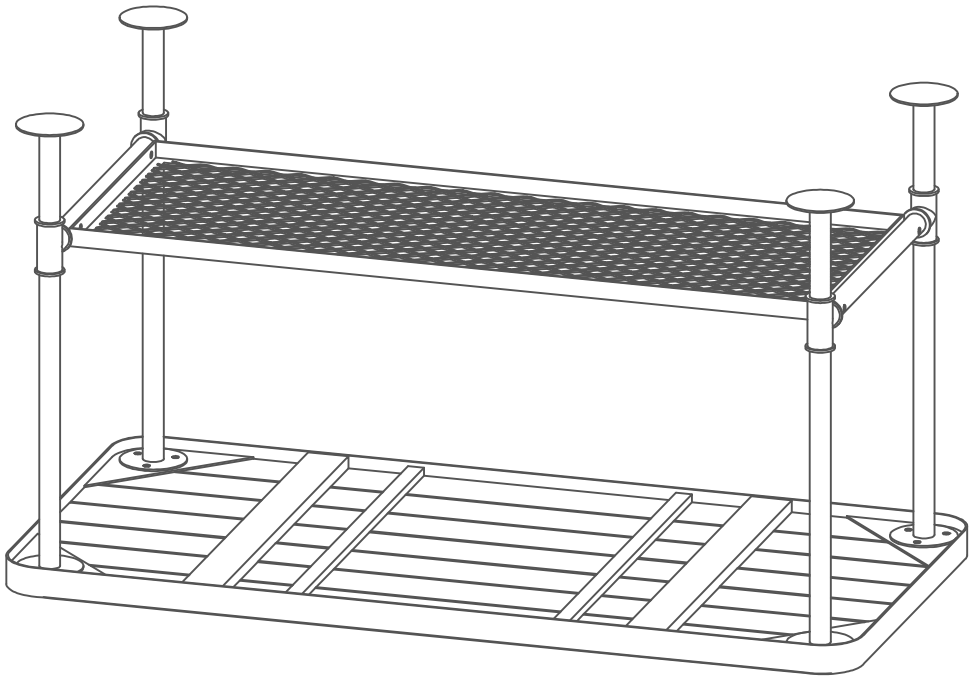

04

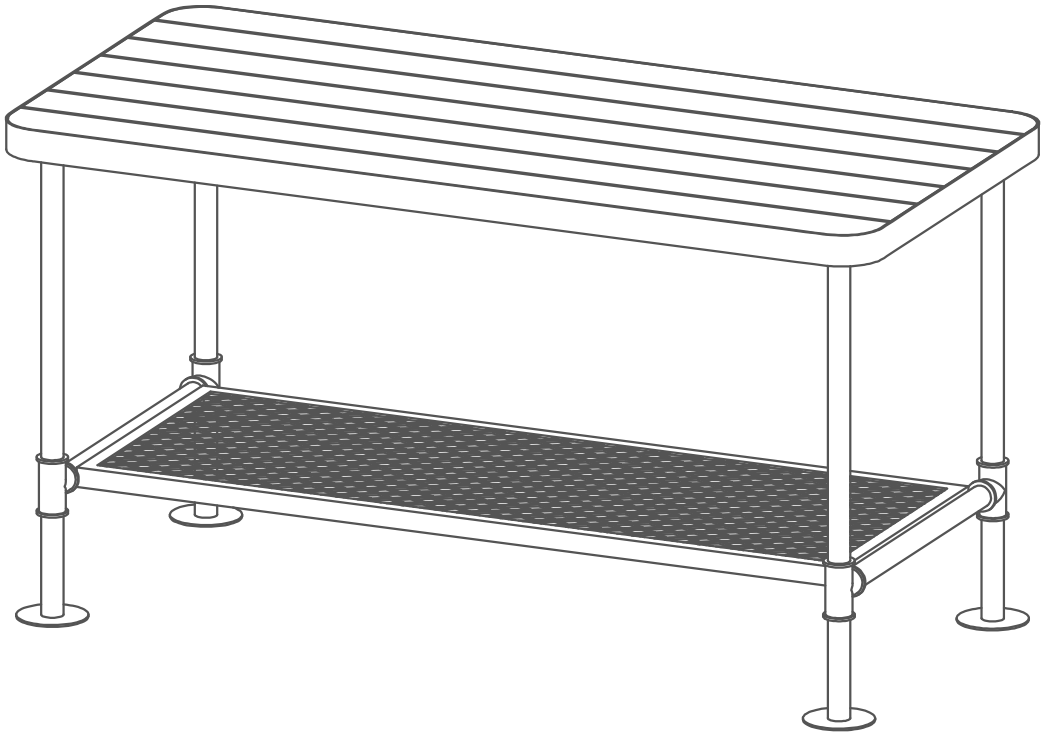

TIGHTE□ BOLT
COMPLETELY

BE S□RE TO CHEC□ ALL BOLTS
ARE SEC□RELY TIGHTE□ED
PRIOR □SI□G THIS ITEM