**ITEM NAME /NOM D' ITEM:PICCOLO DINING CHAIR**

ITEM # /NO. ITEM:101091(YELLOW)

Enquiry:parts@zuomod.com

# PART LIST/Liste des pièces

| (1) | (2) | (3) |
|---|---|---|
| 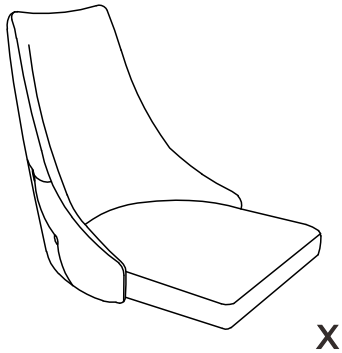 X1 | 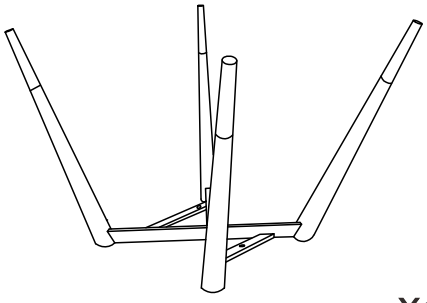 X1 | 1. X3 M6*20mm<br>2. X3<br>3. X1 |

# INSTRUCTION

**A**

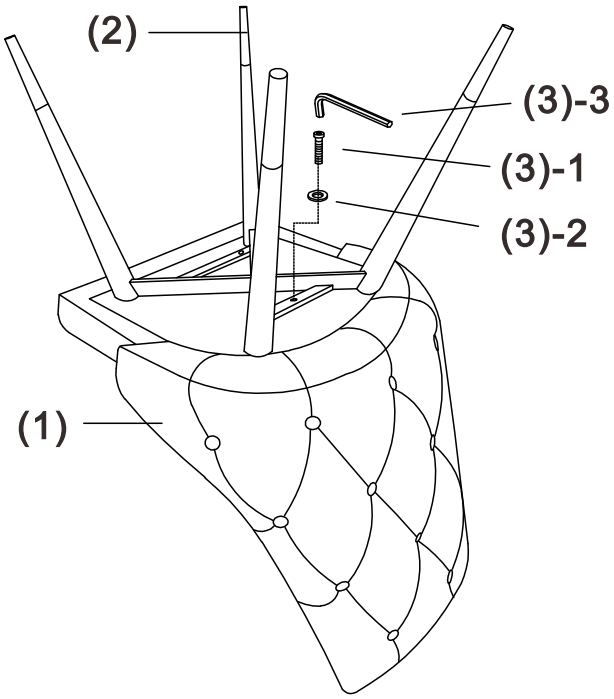

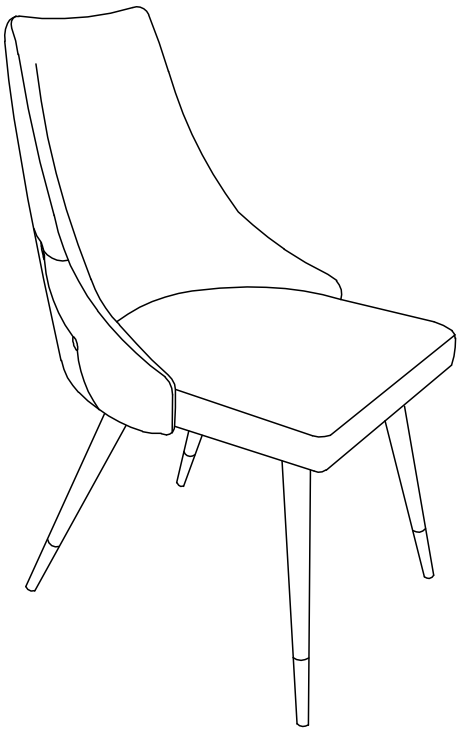
**B**