Assembly & Installation Instructions

CAUTION:

Warning: If any special control devices are used with this fixture, follow the instructions carefully to assure full compliance with N.E.C. requirements. If there are any questions, contact a qualified electric contractor.
Warning: California Residents Proposition 65 This product contains lead, a chemical known to the state of California to cause cancer and birth defects or other reproductive harm. Do not place the product in your mouth. Wash your hands after handling this product.
Caution: Electrician installation highly recommended. All glass is fragile, use care when handling glass component(s) and or lamp(s). Read instructions carefully and turn electricity off at the main circuit breaker panel before beginning installation.
Advertencia: Si usa alguien dispositivo especial de control can este aparato de luz, siga las instrucciones cuidadosamente para asegurar la completa conformidad con los requisitos N.E.C. Si existe alguna duda, contacte un electricista calificado.
Precaución: Instalación de electricista altamente recomendada. El vidrio es frágil: Tenga cuidado al manipular el (los) elemento(s) de vidrio y/o la(s) bombilla (s). Lea atentamente las instrucciones y enciende la electricidad en el panel del interruptor principal antes de comenzar la instalación.

Important Notice: This is a generic instruction sheet used for various fixtures. Fixture shape and style may vary. Glass, Shade, Diffuser shape and style may vary.
Aviso Importante: Esta es una hoja de instrucciones genérica utilizada para varios accesorios. La forma y el estilo del accesorio pueden variar. El vidrio, la sombra, la forma del difusor y el estilo pueden variar.

ASSEMBLY STEPS:
PASOS PARA ENSAMBLAR:
MODE D'ASSEMBLAGE:

1. C,B → A
2. H,F → G
3. E, J → D
4. L → K

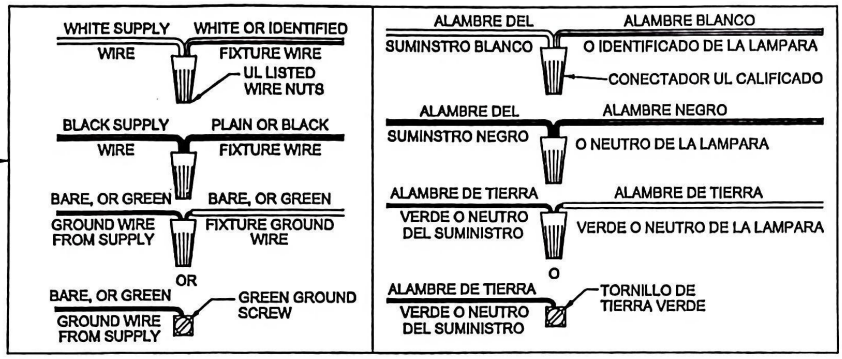

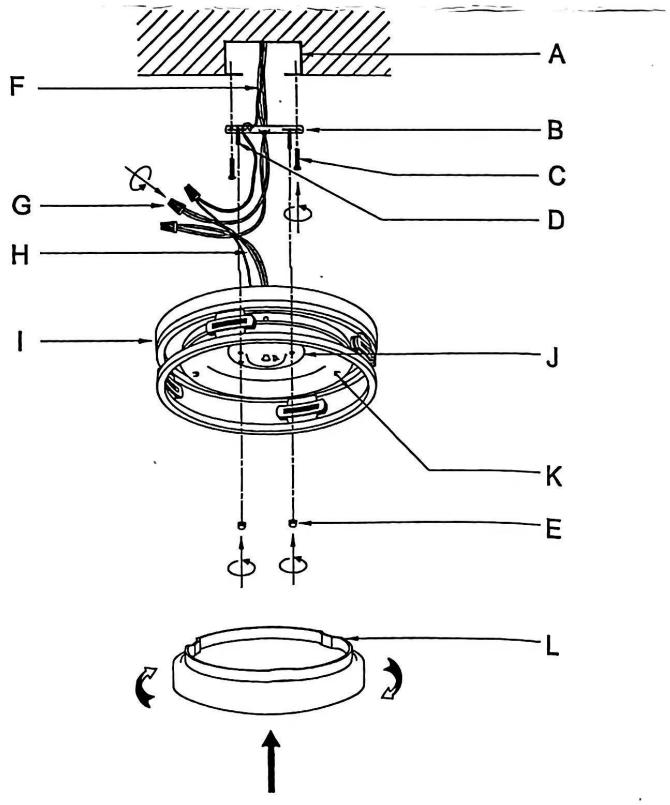

Part Included

QTY	Part Description	Code
0	Junction Box	A
1	Single Mounting Bracket	B
2	Studs	C
2	Mounting Screws	D
2	Ball Nuts	E
0	Leading Wires	F
3	Wires Nuts	G
4	Wires	H
1	Canopy	I
1	LED	J
1	Disc	K
1	Shade	L



The color temperature range of LED is 30K-65K

By flipping the button on the LED with your finger, you can adjust 5 different color temperatures.