ASSEMBLY INSTRUCTIONS

SR06

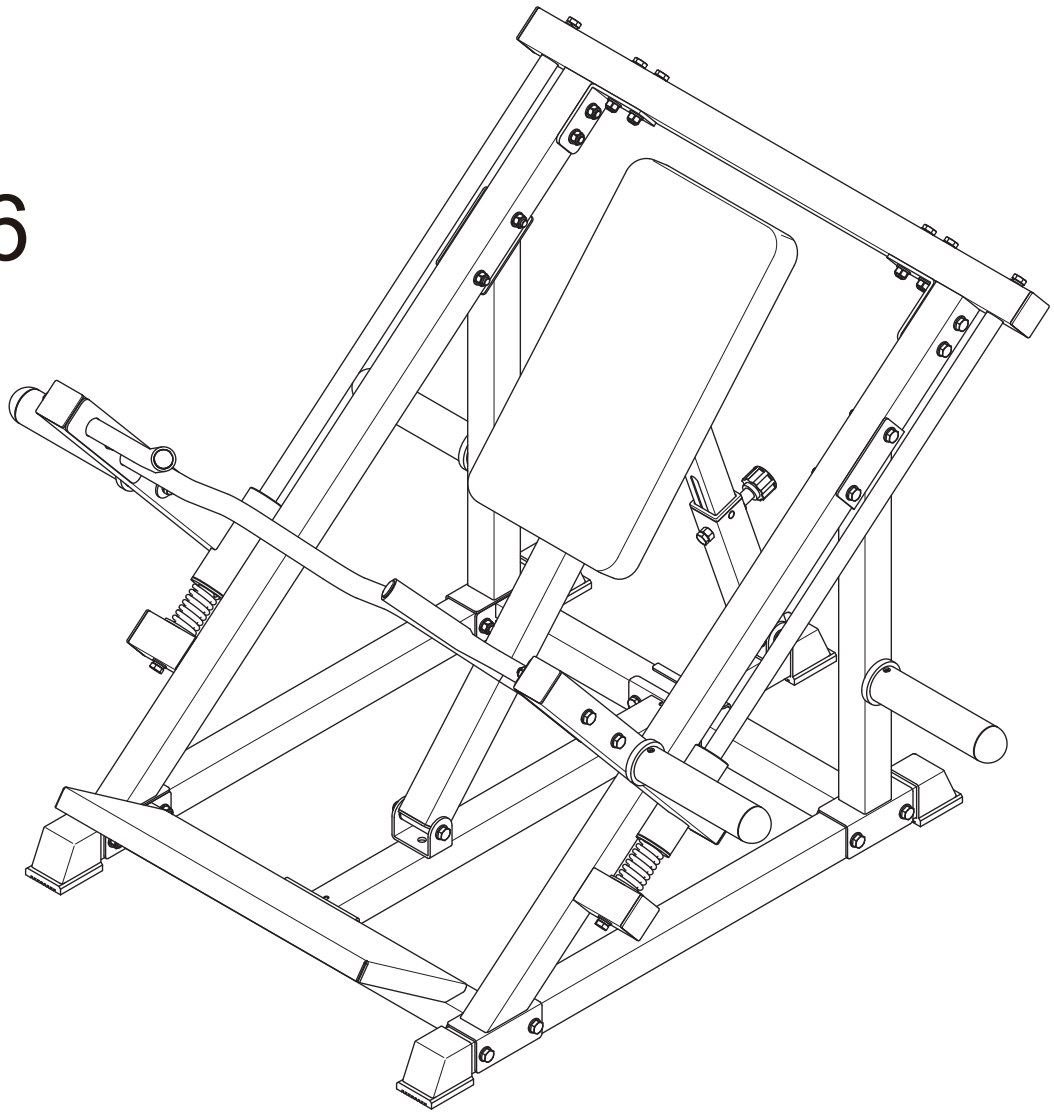

HR002

Read all precautions and instructions in this manual before using this equipment

Assembly Caution ---------- 3

Part List ----------4

Part List ----------5

Part List ----------6

Step1 ----------7

Step2 ----------8

Step3 ----------9

Step4 ----------10

Step5 ----------11

Step6 ----------12

Step7 ----------13

Step8 ----------14

Step9 ----------15

Step10 ----------16

After-Sale Information ---------- 18

ASSEMBLY CAUTION

Please carefully read the following information before installation

Assembling requires at least two people
Do not tighten all screws before assembly is complete
Ensure that all accessories are complete. If not, please contact us via email

STOP

If you are missing any parts, or otherwise
have any warranty issues, please contact us first.

Shortcut: A Lot of People Doing That Way

To enhance your installation process for both speed and convenience, consider removing all accessories from the box, carefully opening the packaging, and arranging everything neatly on the floor. This preparation can streamline your setup experience.

The following tools might help you improve your installation experience

- Adjustable wranches

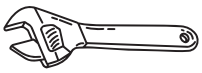

- Rubber hammers



- Socket set

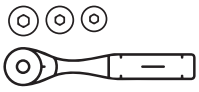

- Electric Wrench

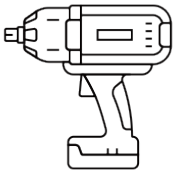

WARNING



Choking hazard. Small parts-Please exercise caution if smallchildren or pets are present.



Sharp objects may be involved. Use precaution and protection.



Heavy object. Use lifting aids and proper lifting techniques when moving

PART LIST

A1. Front Base Tube 1 PCS 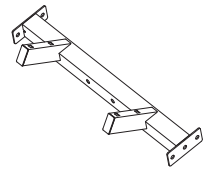	A2. Seat Cushion Support Tube-A 1 PCS 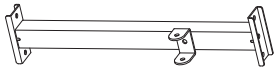	A3 .Rear Base Tube 1 PCS 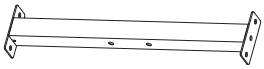	A4. Seat Cushion Support Tube-D 1 PC 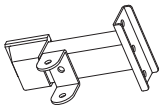
A5. Sides Base Tube 2 PCS 	A6. Guide Rod Retainer-Left 1 PC 	A7. Guide Rod Retainer-Right 1 PC 	B1 . Vertical Support Tube-right 1 PC 
B2 . Vertical Support Tube-left 1 PC 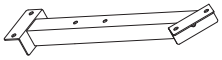	B3 .Weight Storage Pin 4 PCS 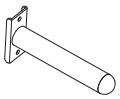	B4 .Bearing Sleeve 2 PCS 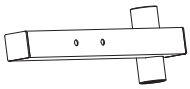	B5 .Guide Rod 2 PCS 
B6 .Spring 2 PCS 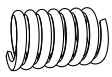	B7 .Washer(50mm) 4 PCS 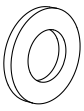	B8 .Multi-grip Handle 1 PC 	B9 .Top Connecting Tube 1 PC 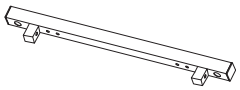
B10 .L-shaped Stiffener 2 PCS 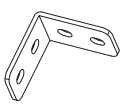	C1 .Pedal 1 PC 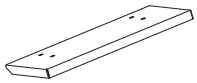	C2 .Seat Cushion 1 PC 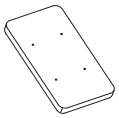	C3 .Seat Cushion Tube-A 1 PC 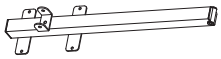

PART LIST

C4 .Gear Adjusting Tube 1 PC 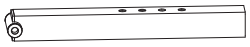	C5 .Seat Cushion Tube-D 1 PC 	C6 .Adjustable Pin 1 PCS 	C7 .Rubber Gasket 4 PCS 
C8 .Reinforced Iron Plate 2 PCS 	C9 . 2"Spring Clamp 2 PCS 		

PART LIST

1. Bolt (M10*70mm) 36 PCS 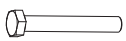	2. Washer (10mm) 82 PCS 	3. Locknut(M10) 43 PCS 	5. Bolt(M10*25mm) 5 PCS 
6. Washer(34*11mm) 4 PCS 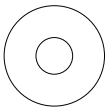	7. Spring Washer(M10) 4 PCS 	8. Bolt(M8*20mm) 4 PCS 	9. Washer(8mm) 4 PCS 
10. Bolt(M10*70mm) 4 PCS 	11 .Bolt(M10*85mm) 3 PC 		

STEP: 1

A1. Front Base Tube 1 PCS 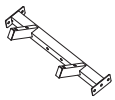	A2. Seat Cushion Support Tube-A 1 PCS 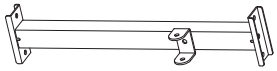	A3 .Rear Base Tube 1 PCS 	A4. Seat Cushion Support Tube-B 1 PC 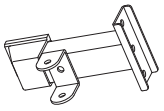
1. Bolt (M10*70mm) 4 PCS 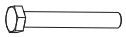	2. Washer (10mm) 8 PCS 	3. Locknut(M10) 4 PCS 	

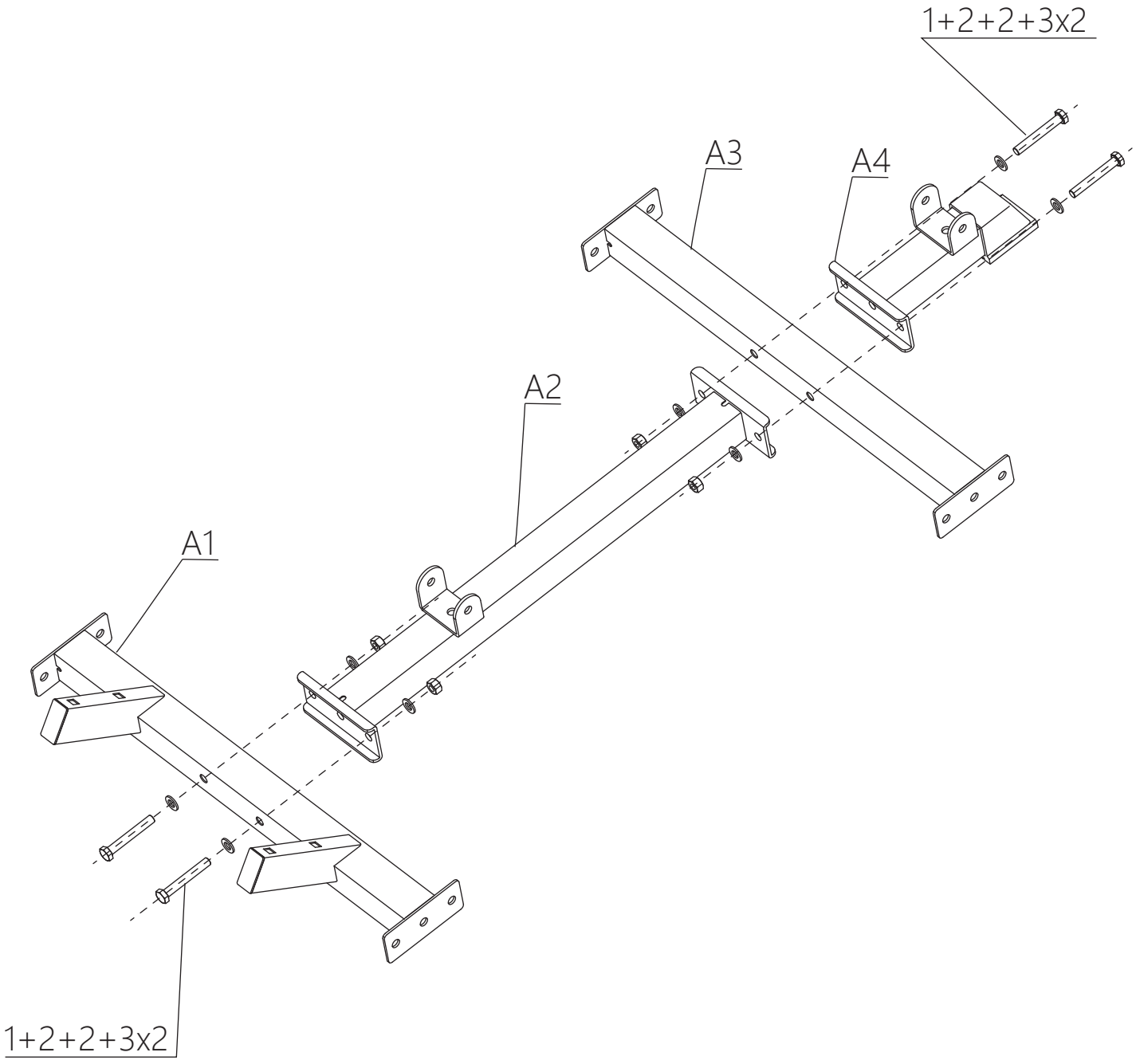

STEP: 2

A5. Sides Base Tube 2 PCS 	A6. Guide Rod Retainer-Left 1 PC 	A7. Guide Rod Retainer-Right 1 PC 	2. Washer (10mm) 8 PCS 
3. Locknut(M10) 4 PCS 	1. Bolt (M10*70mm) 4 PCS 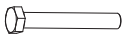		

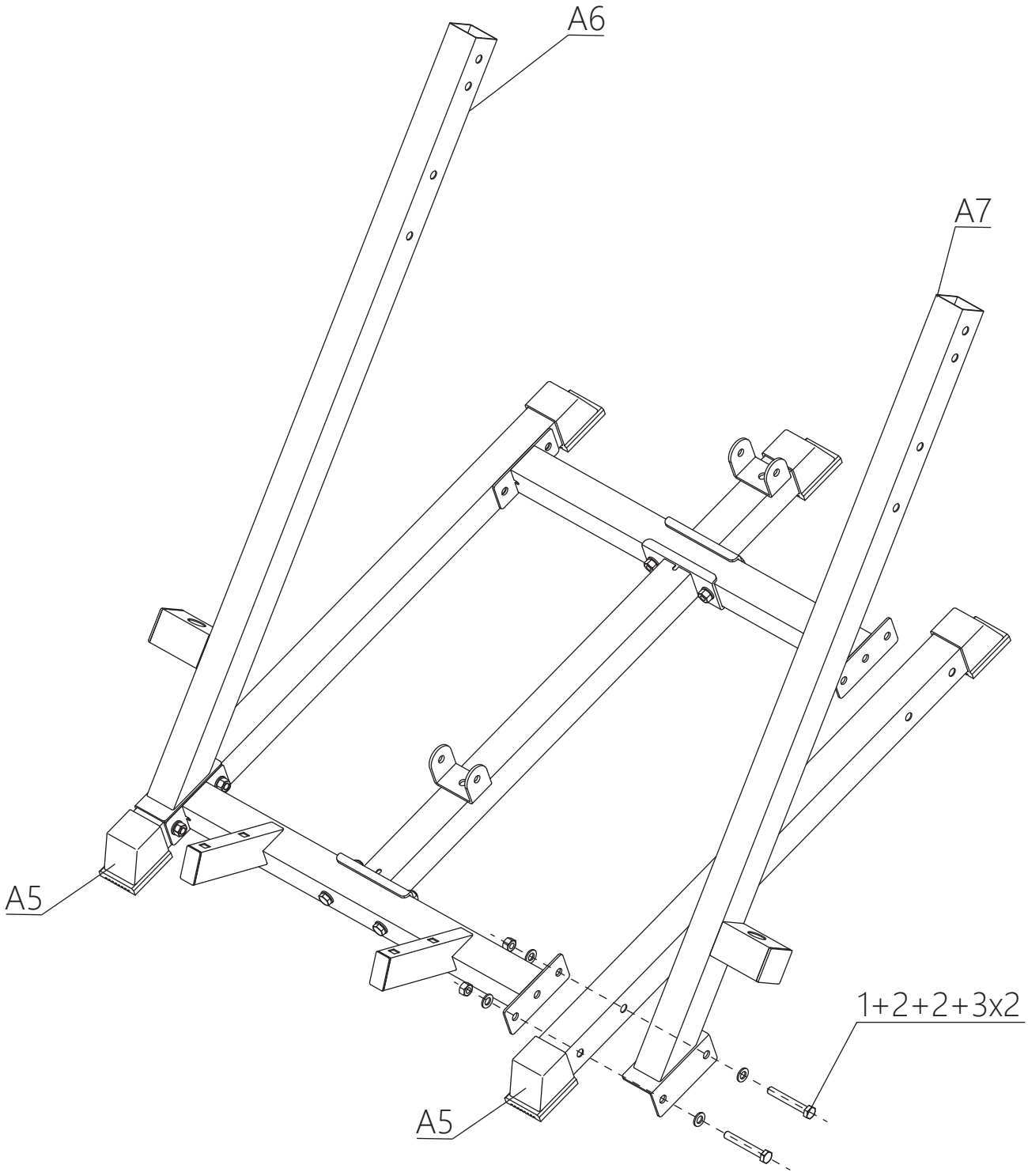

STEP: 3

B1 . Vertical Support Tube-Right 1 PC 	B2 . Vertical Support Tube-Left 1 PC 	B3 .Weight Storage Pin 2 PCS 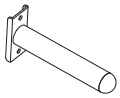	1. Bolt (M10*70mm) 12 PCS 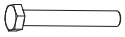
2. Washer (10mm) 20 PCS 	3. Locknut(M10) 12 PCS 	6. Washer(34*11mm) 4 PCS 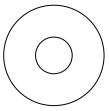	C7 .Rubber Gasket 2 PCS 

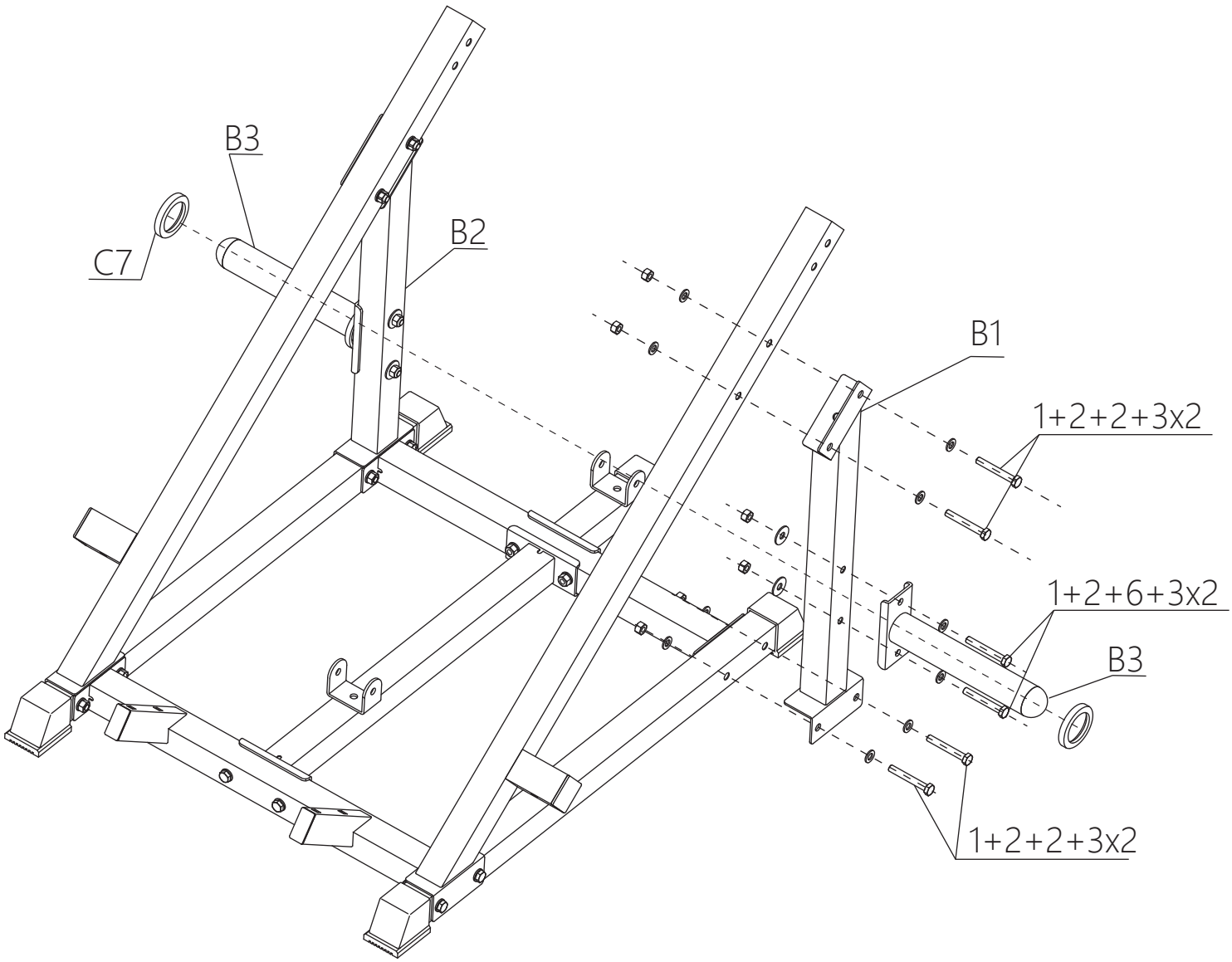

STEP: 4

B4 .Bearing Sleeve 2 PCS 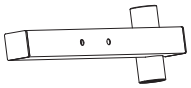	B5 .Guide Rod 2 PCS 	B6 .Spring 2 PCS 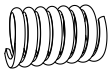	B7 .Washer(50mm) 4 PCS 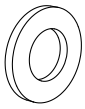
2. Washer (10mm) 2 PCS 	5. Bolt(M10*25mm) 2 PCS 	7. Spring Washer(M10) 2 PCS 	

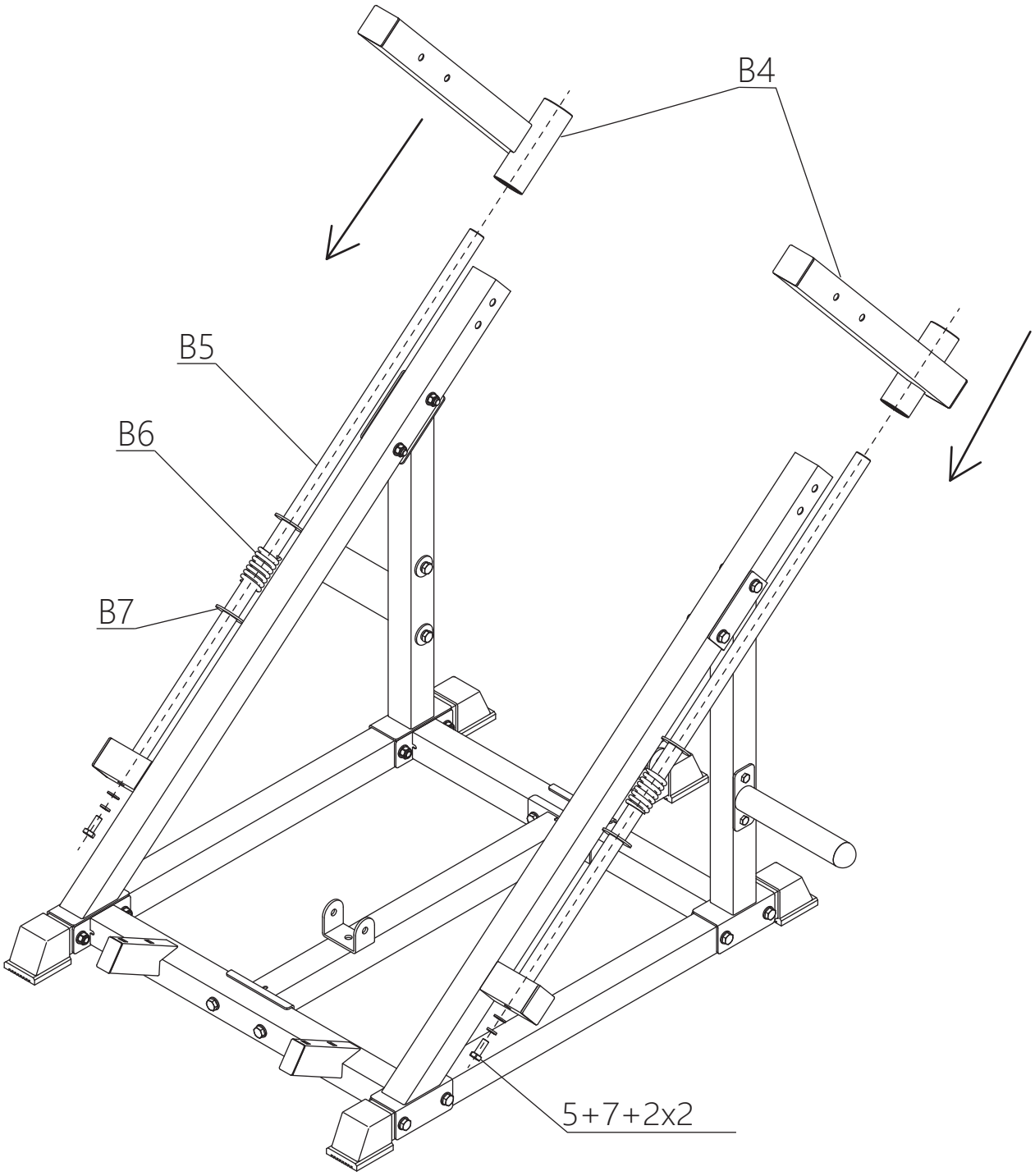

STEP: 5

B8 .Multi-grip Handle 1 PC 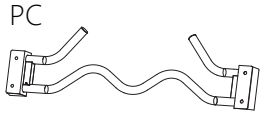	B3 .Weight Storage Pin 2 PCS 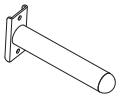	1. Bolt (M10*70mm) 8 PCS 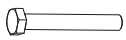	2. Washer (10mm) 16 PCS 
3. Locknut(M10) 8 PCS 	C7 .Rubber Gasket 2 PCS 	C8 .Reinforced Iron Plate 2 PCS 	C9 . 2"Spring Clamp 2 PCS 

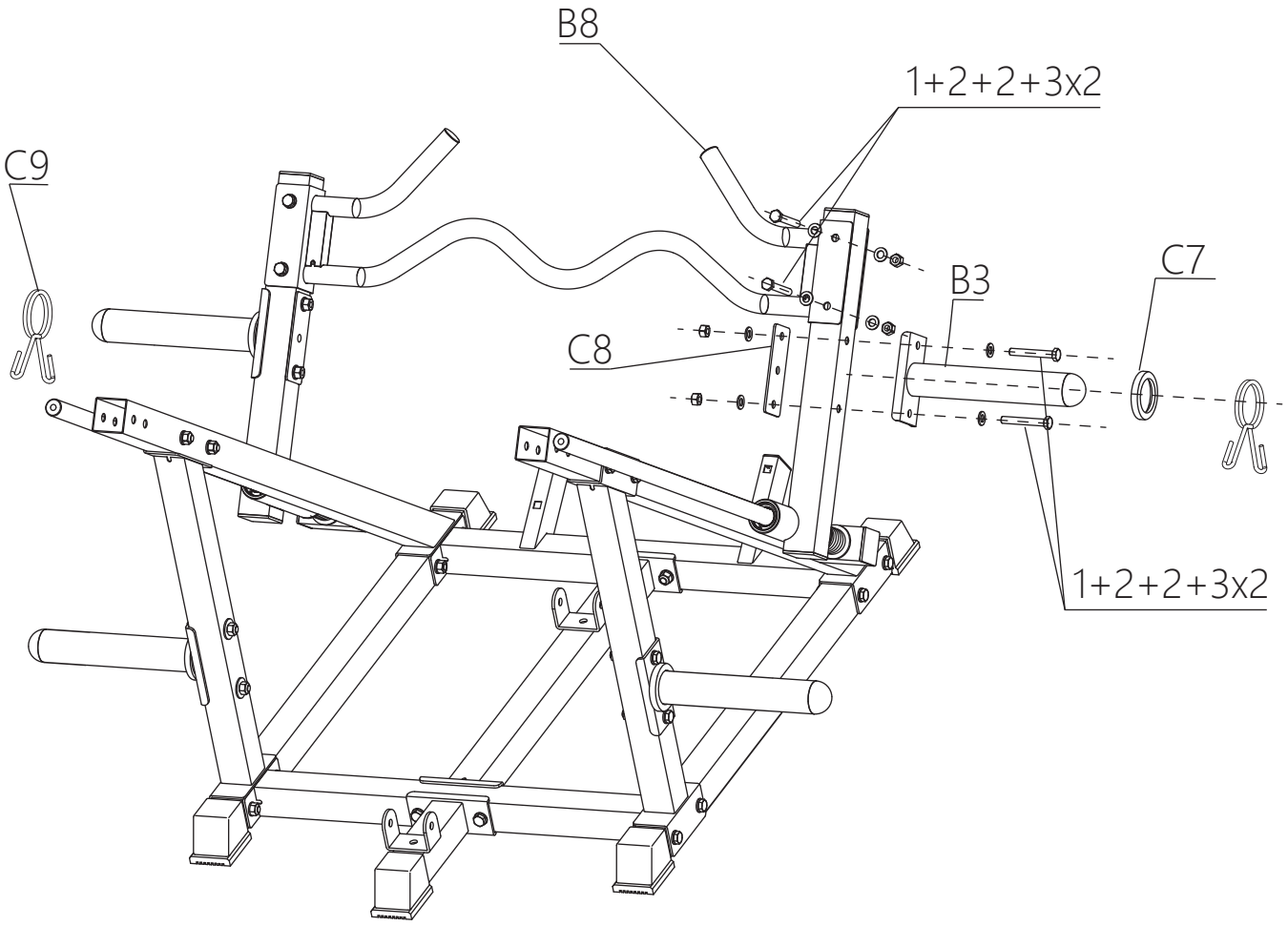

STEP: 6

B9 .Top Connecting Tube 1 PC 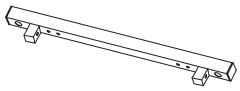	B10 .L-shaped Stiffener 2 PCS 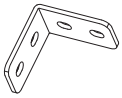	1. Bolt (M10*70mm) 8 PCS 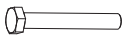	2. Washer (10mm) 18 PCS 
3. Locknut(M10) 8 PCS 	5. Bolt(M10*25mm) 2 PCS 	7. Spring Washer(M10) 2 PCS 	

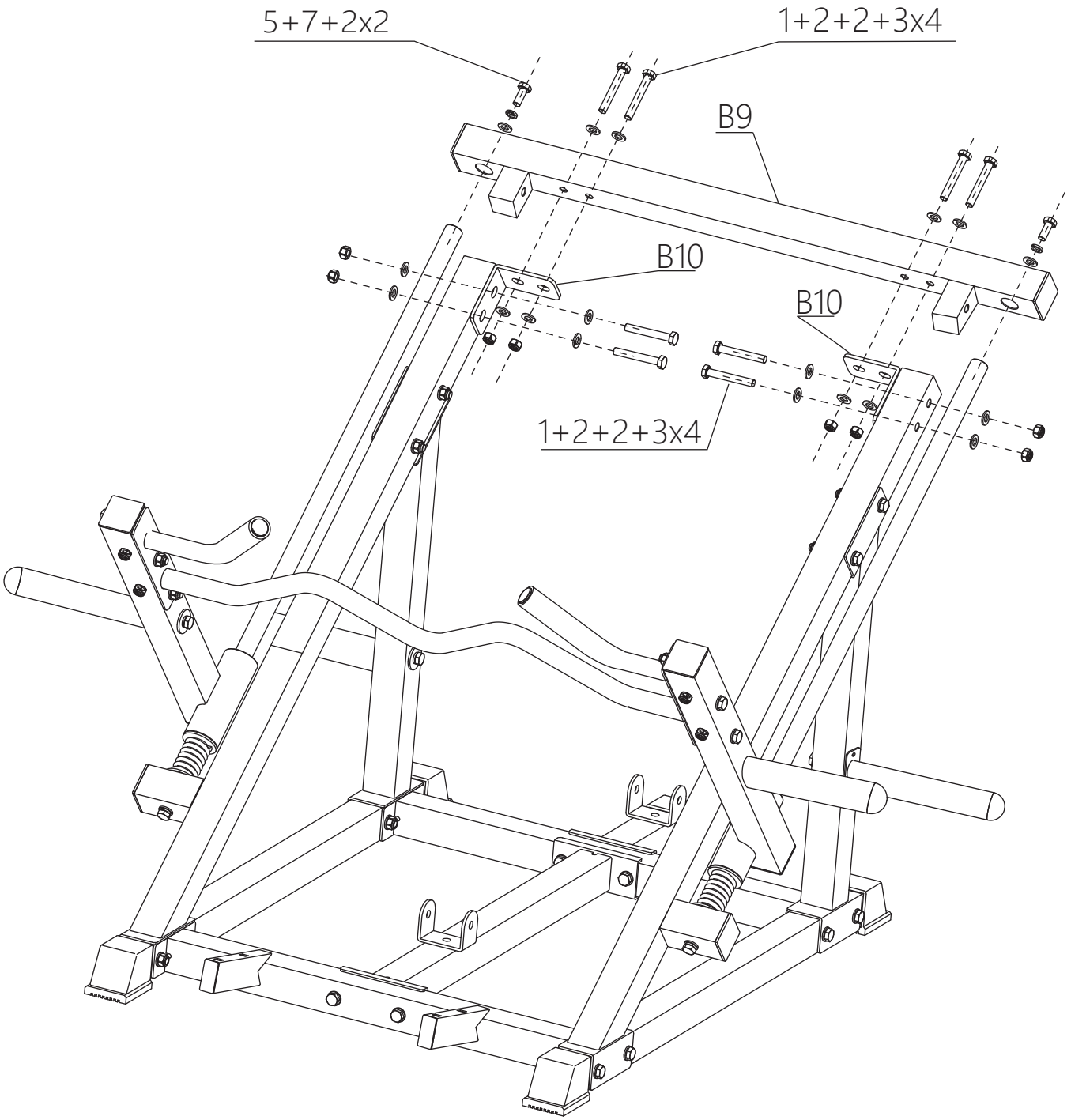

STEP: 7

C1 .Pedal 1 PC 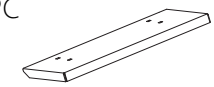	2. Washer (10mm) 4 PCS 	3. Locknut(M10) 4 PCS 	10. Bolt(M10*25mm) 4 PCS 

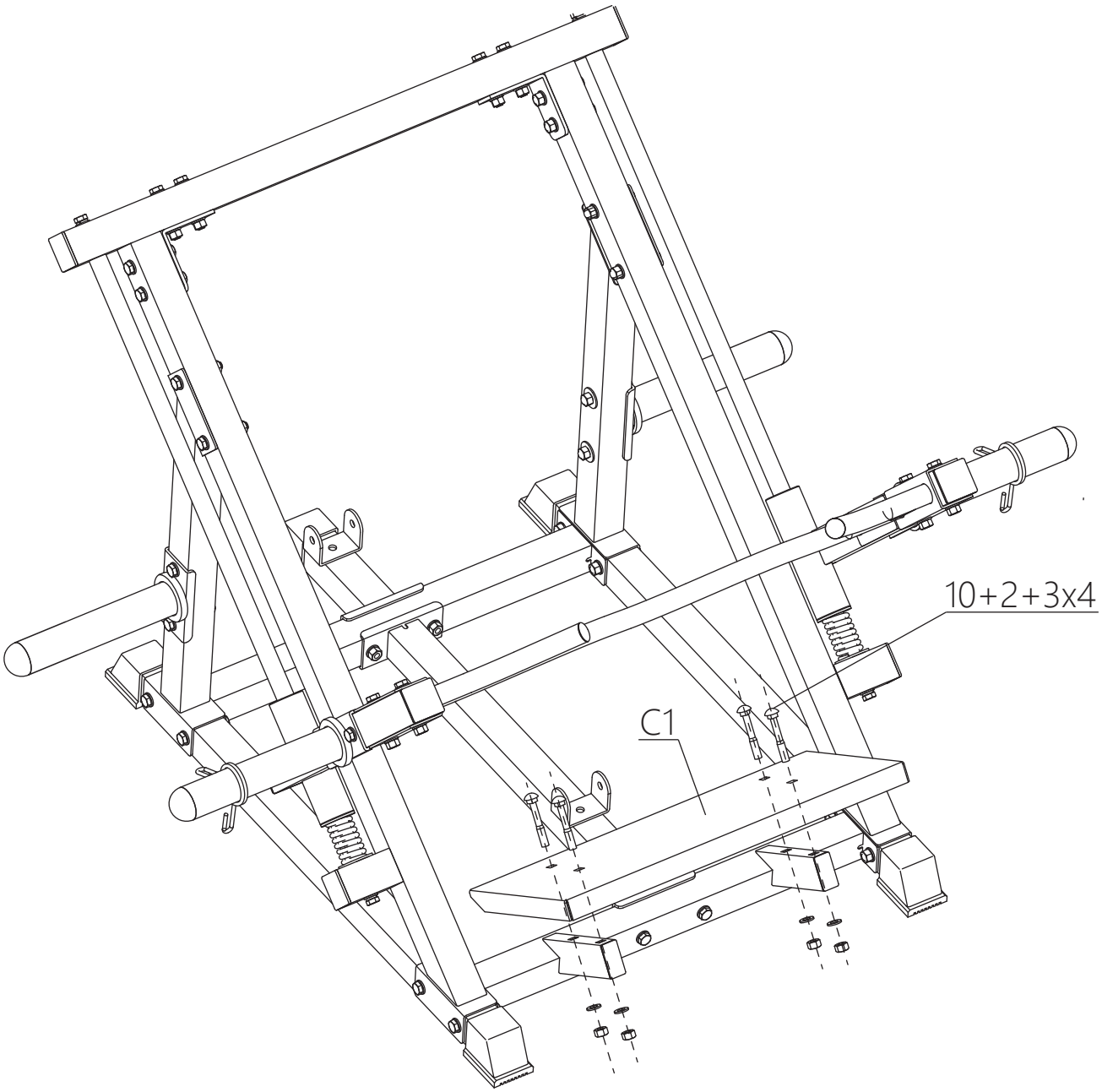

STEP: 8

C2 .Seat Cushion 1 PC 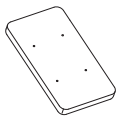	C3 .Seat Cushion Tube-A 1 PC 	8. Bolt(M8*20mm) 4 PCS 	9. Washer(8mm) 4 PCS 

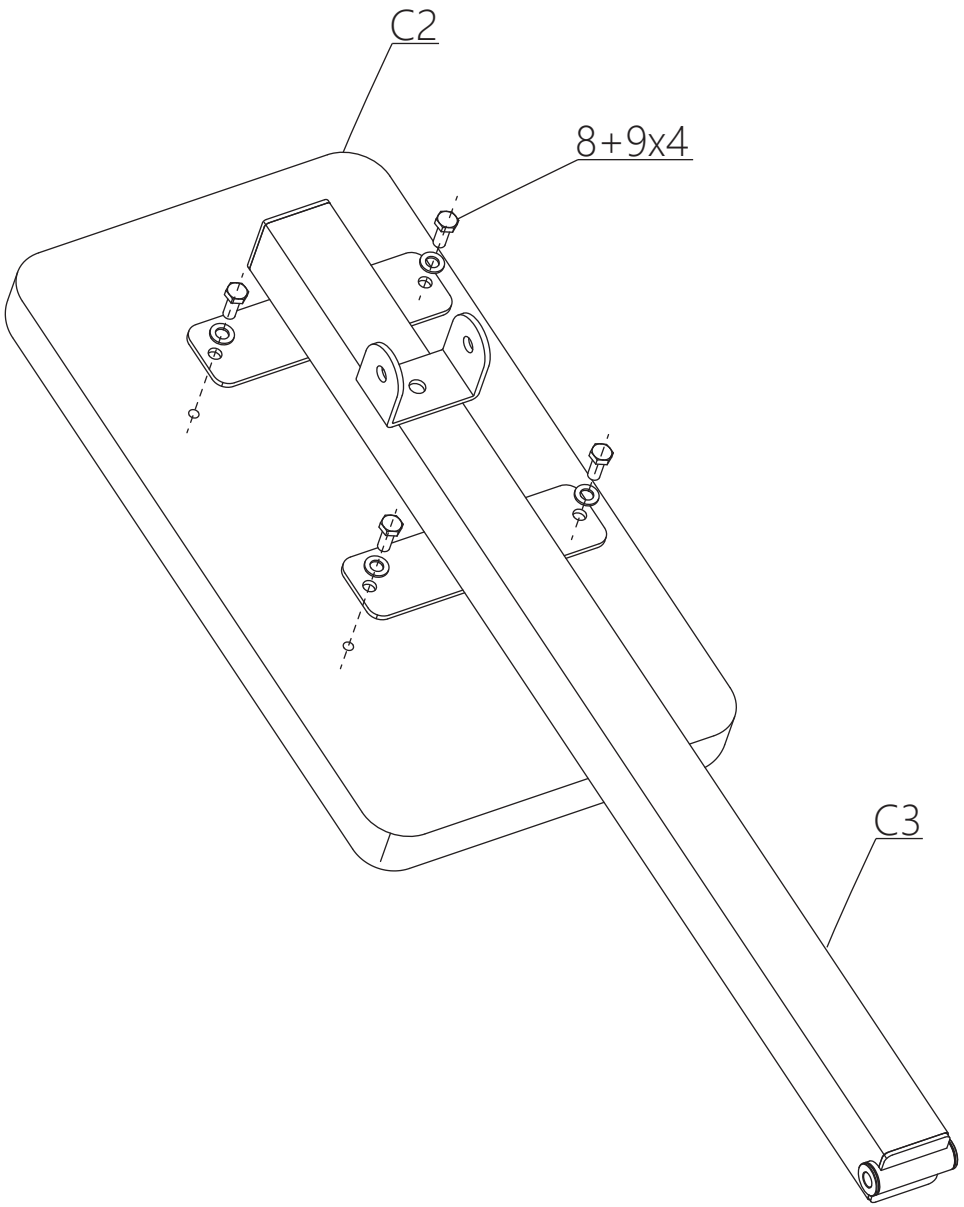

STEP: 9

C4 .Gear Adjusting Tube 1 PC 	C5 .Seat Cushion Tube-D 1 PC 	C6 .Adjustable Pin 1 PCS 	5 .Bolt(M10*25mm) 1 PC 

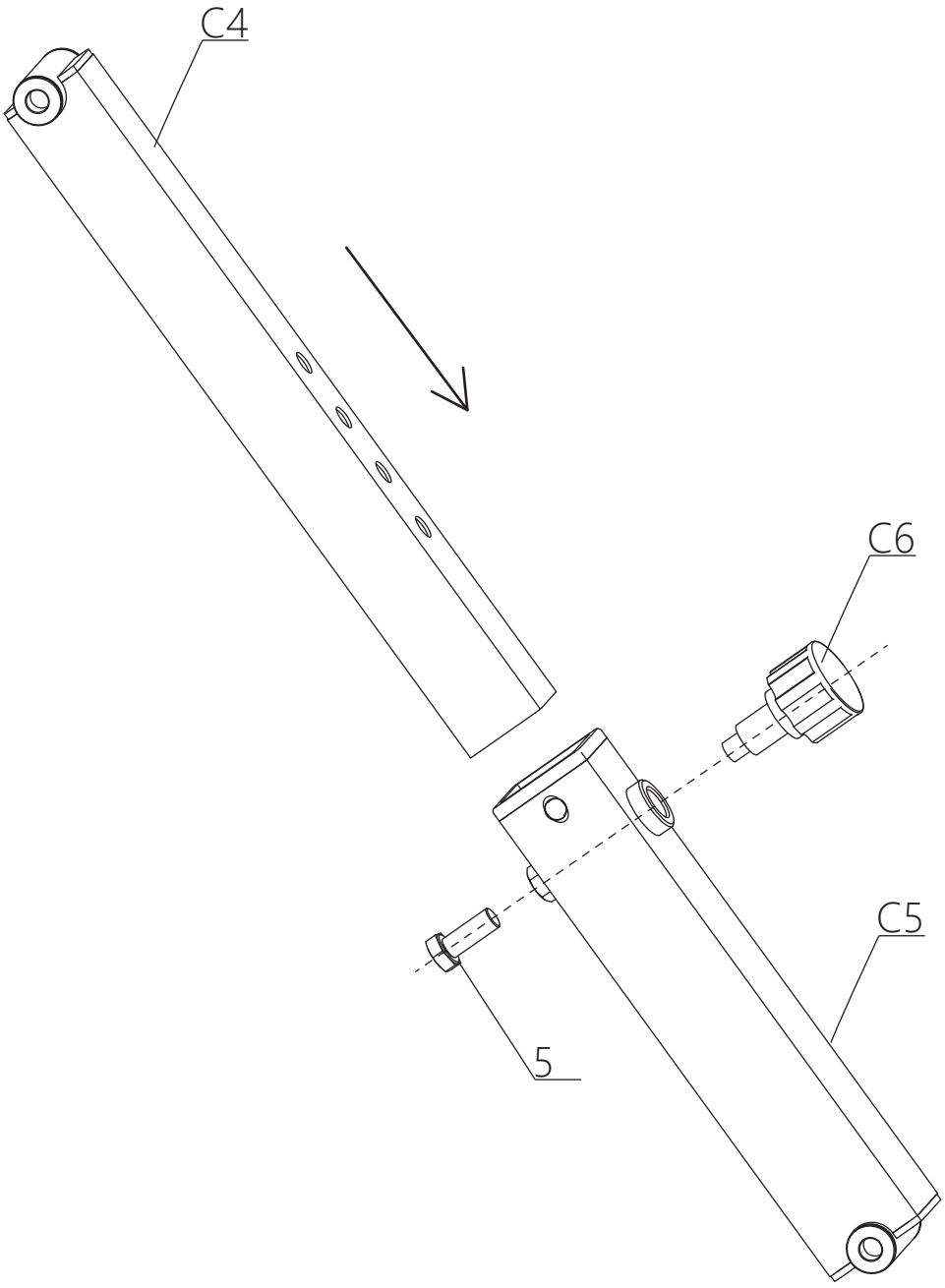

STEP: 10

2. Washer (10mm) 6 PCS 	3. Locknut(M10) 3 PCS 	10 .Bolt(M10*85mm) 3 PCS 	

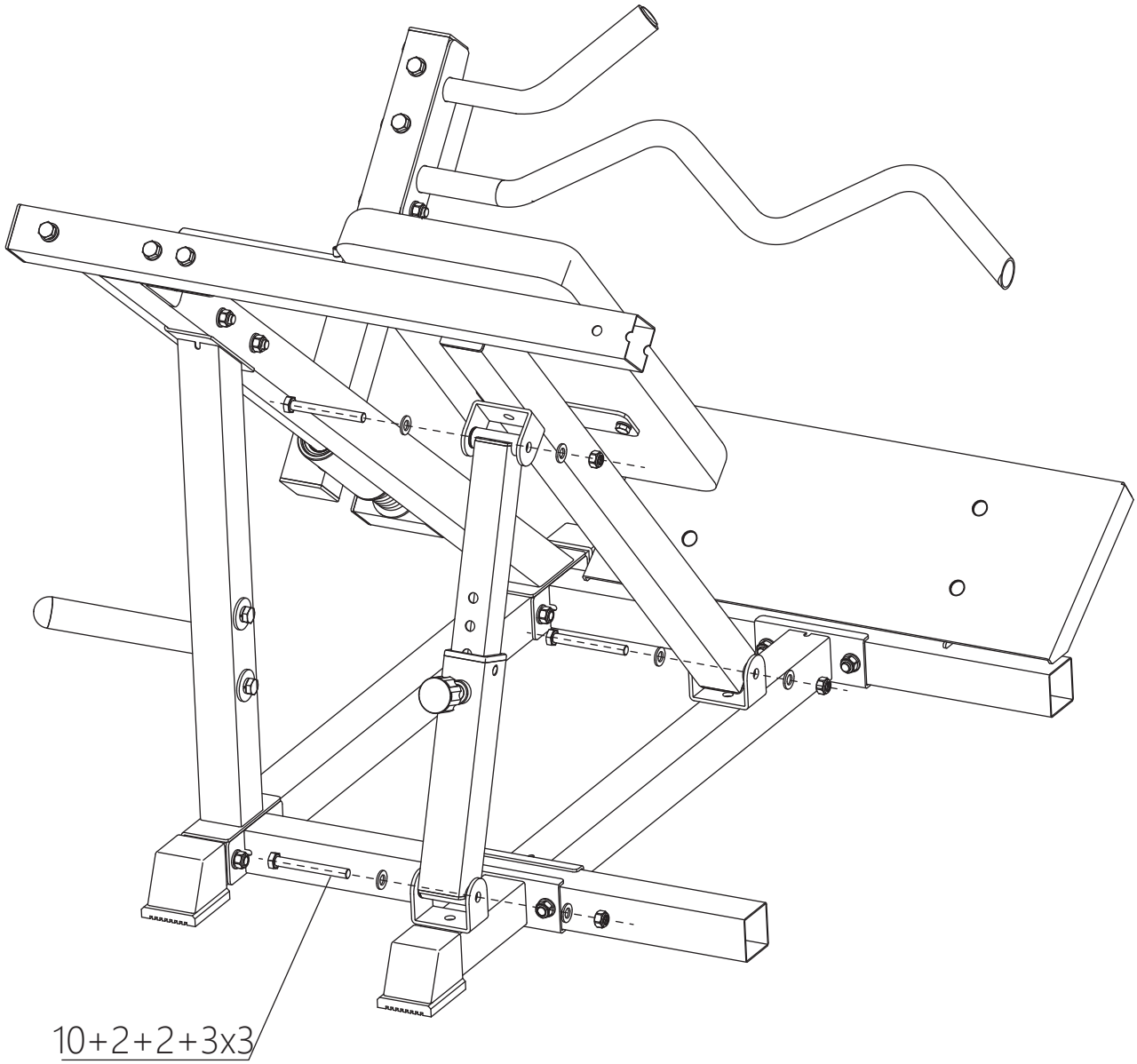

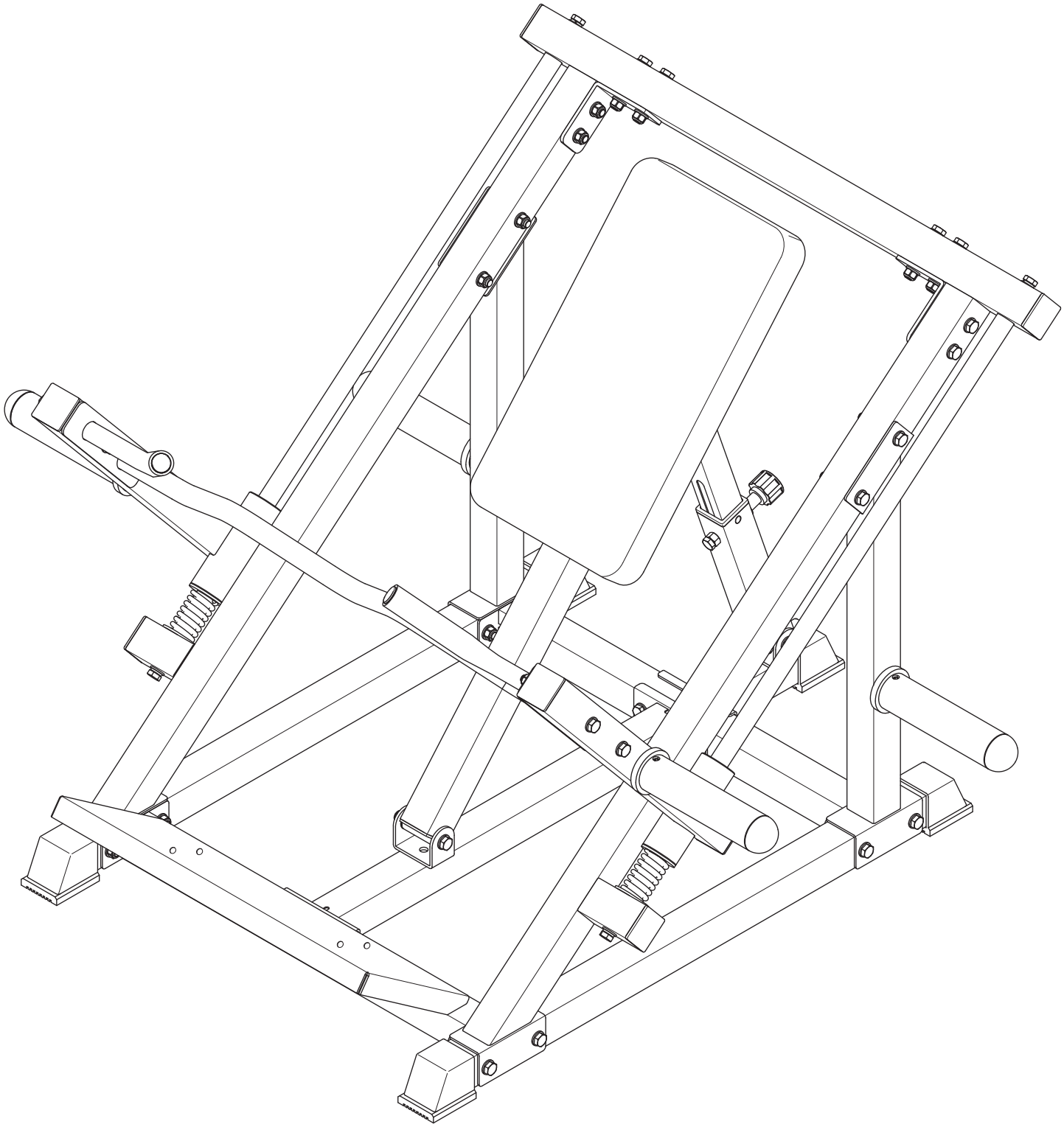

FORMAT OF AFTER-SALE EMAIL

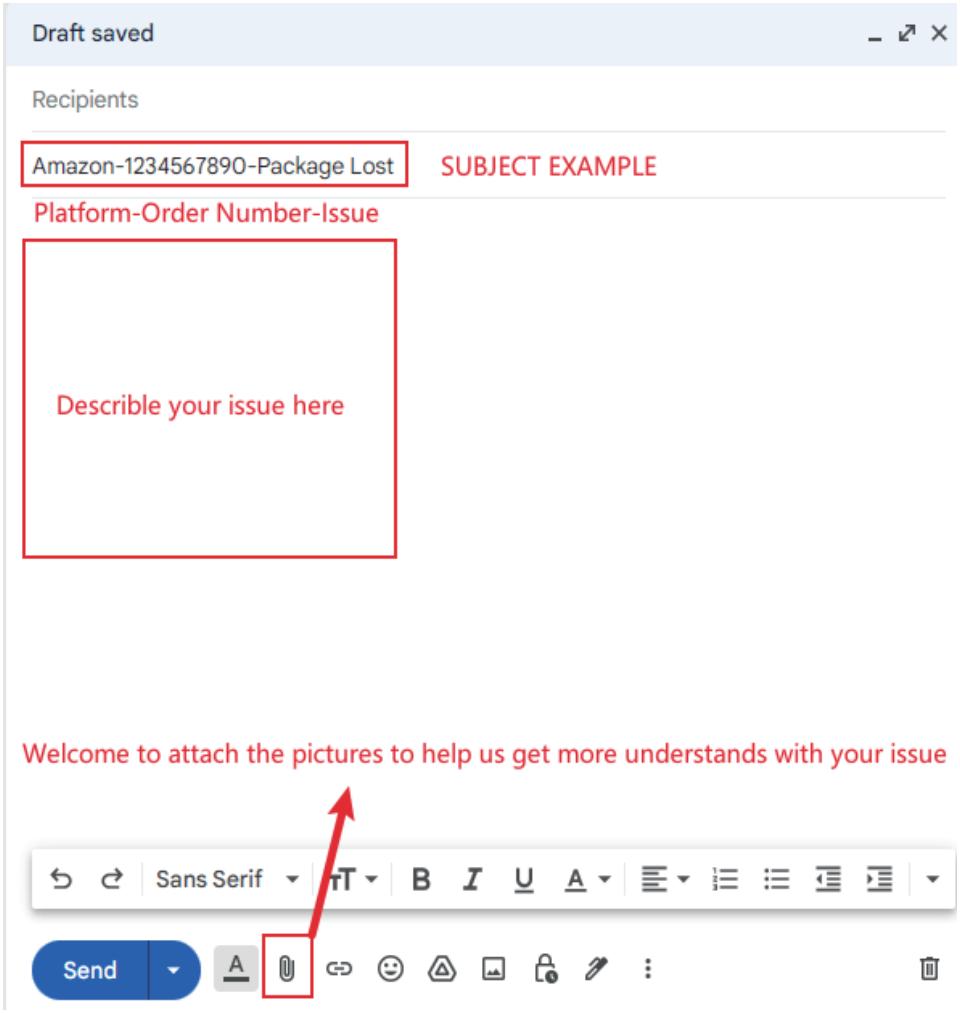

Welcome to send us some pictures to describe your problem, which will help us better and faster understand your current situation, and thus provide you with the best solution.

The machine you ordered has been carefully inspected and is fully guaranteed to be in perfect working order. This lifetime warranty covers missing parts, damaged parts, package lost, all manufacturing and mechanical defects, excluding malfunctions or deterioration resulting from accidents or negligence. with this card, you are entitled to obtain service at any platform, such as Amazon, Walmart, and our own website.

Please provide your Platform and Order Number to us in the email subject.

NEED HELP?

CONTACT US FIRST.

fitnessafterservice@outlook.com