Precautions

1. Please fix the product on a solid and reliable wall. When hitting, please hit the area, and do not hit the corner area to avoid hand injury or equipment damage.

2. This product is suitable for adults. Children should use it under adult supervision.

3. Beginners should not be too strong to avoid hand injury. First of all, pay attention to safety during the exercise. It is strictly forbidden to hit legs and knees.

4. Do not hit the horn area.

5. The device can not be turned on or abnormal please check whether the power is too low, should be charged in time, charging time should not exceed 8 hours, long-term use is recommended to charge once 1-2 months.

6. This product is not waterproof, wipe boxing target need to use dry cloth do not touch water.

7. Please take good care of the instructions for emergency use.

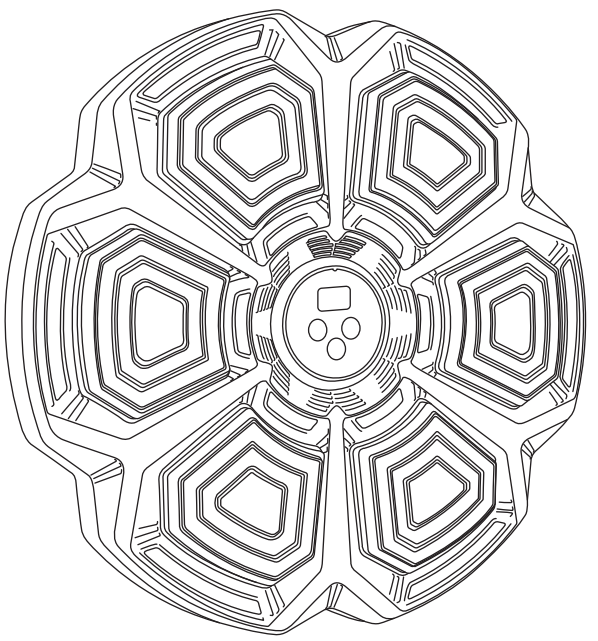

Smart Music Boxing Target Instruction Manual

Product Description

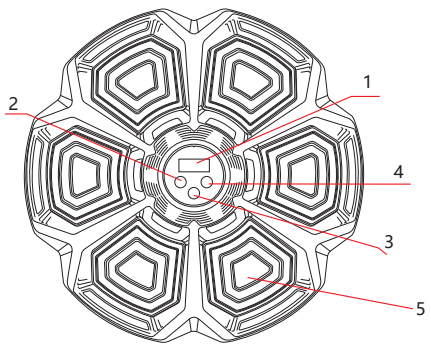

1、Display

2、Speed Button

3、On/off Button

4、Mode Button

5、Hit Point

Installation Notes

Installation Way:

1.Align and paste the hook and loop fasteners with glue on the back of the product.
2.Peel off the double-sided tape on the top half.
3.Align the position with the wall and stick it firmly.

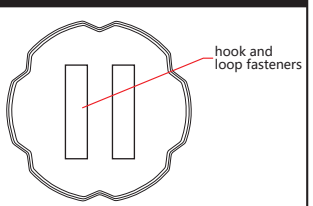

Troubleshooting

NO.	Symptoms	Cause Analysis	Method of exclusion
1	No lights and no sound	The product is not powered on	Short press the switch
2	No lights and no sound	Battery drain	Charge
3	Lights flicker	Low battery	Charge
4	Short press the switch can not turn on	The main chip capacitor is short of power due to long-term non- startup	Repeatedly short press the swith
5	Banging sound inside the device	Issued by the internal active stress structure	Normal phenomenon

Installation For Use

Voltage: 3.7V lithium battery

Charging: 888 outer ring cycle racing display

Bluetooth name: GDBX-06

Full: Shows FUL

Display: button adjustment mode, speed, volume, display corresponding interface, None The score screen is displayed after 5 seconds of operation or after striking.

Key: (SPEED/volume reduction) SPEED key:

1: Short press to adjust the speed, where the HAU speed changes according to the music rhythm, H01-H09 is a fixed speed, the larger the value, the faster the speed.

2: Press and hold to reduce the volume. The range is U00-U30.

(Start/play/Pause) ON/OFF key:

1: Press and hold the switch for 1 second.

2: After Bluetooth connection, short press to play/pause music.

(MODE/Volume plus) MODE key:

1: Tap to switch modes. Range: P01-P09, 9 modes.

2: Press and hold to increase the volume. The range is U00-U30.

Boot without connected Bluetooth:

1: 3 minutes automatic shutdown.

2: No connection, and a background tone is played repeatedly.

Bluetooth connected:

1: Can play Bluetooth music.

Boxing:

1: 6 boxing positions, according to the position of the light, when the light is successful, you can score.

2: Failed to hit: No score, play failed voice, there are three kinds of failed voice.

3: Hit successfully: Play successful voice, add 1 point, score 000-999, clear after more than 999 points.

4.The outer ring light is on after success.