Questions, problems, missing parts? Before returning to the store please contact our Customer Service

PREMIUM HOME SOLUTION

VALUABLE DURABLE ENJOYABLE

BELIEVE WHAT YOU GET
Believe What You Get

USE AND CARE GUIDE

E02GF176

Questions, problems, missing parts? Before returning to the store please contact our Customer Service

THANK YOU

We appreciate the trust and confidence you have placed in us through the purchase of our product. We strive to continually create quality products designed to enhance your home. Visit us online to see our full line of products available for your home improvement needs.
Thank you for choosing us!

Table of Contents

Table of Contents 2
Safety Information 2
Warranty 2
What is Covered 2
What is Not Covered 2
Pre-assembly 3
Assembly 4–5
Care And Maintenance 6

Safety Information

- **Do not completely tighten screws until all screws are started.**Tighten each bolt firmly and properly.
- Some parts may contain sharp edges. Wear protective gloves as necessary.
- Children under the age of 16 should not be engaged in the assembly, removal or disassembly of the product. Children under the age of 10 should be supervised by a competent adult while using this furniture.
- Please keep children out of the assembly area during assembly.
- This set is heavy, and may require two adults for safe assembly.
- Never use this product as a support. Do not shake, lean, or climb on the product at any time.

DANGER : Do not allow children to play with plastic wraps or small parts to prevent potential chocking hazard.

CAUTION: Read all the instructions before assembly. Failure to do so may result in faulty assembly and potential injury!

Warranty

LIMITED WARRANTY

This warranty is a limited warranty, and applies to the original purchase is required. This is a residential warranty and does not apply to commercial use. This collection carries a (1) year limited warranty and is valid from original date of purchase to the original owner
(proof of purchase required).

WHAT IS COVERED

We warrant the frame to be free of Manufacturing defects to the original purchaser for one year.

WHAT IS NOT COVERED

This warranty does not cover commercial use, hardware, acts of nature, fire, freezing and abusive.
In addition, purchased parts are not covered under this warranty.
We reserve the right to make substitutions with similar merchandise, if the model in question is no longer in production.

For a copy of our full limited warranty, please contact our customer service team.

Pre-assembly (continued)

Assemble the item on a soft, non-abrasive surface, such as carpet or cardboard to avoid damaging the item.
Seek assistance to assemble
bulky or heavy items.

NOTE: Identify all parts packed in the carton against the parts list.
Remove all the protective material carefully and DO NOT use a knife to prevent scratching the furniture.

PACKAGE CONTENTS

NOTE: Hardware not shown to actual size.

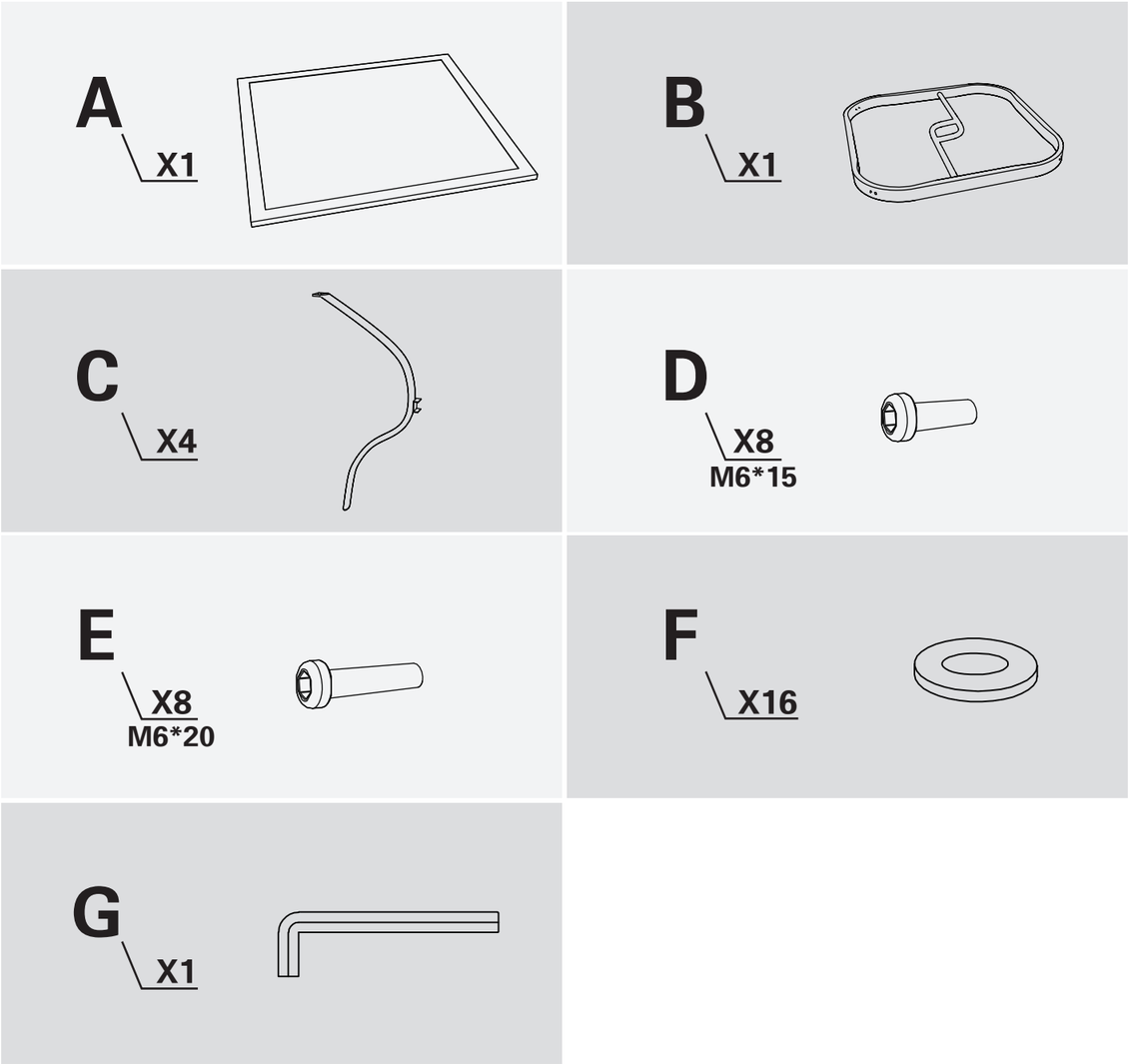

Assembly

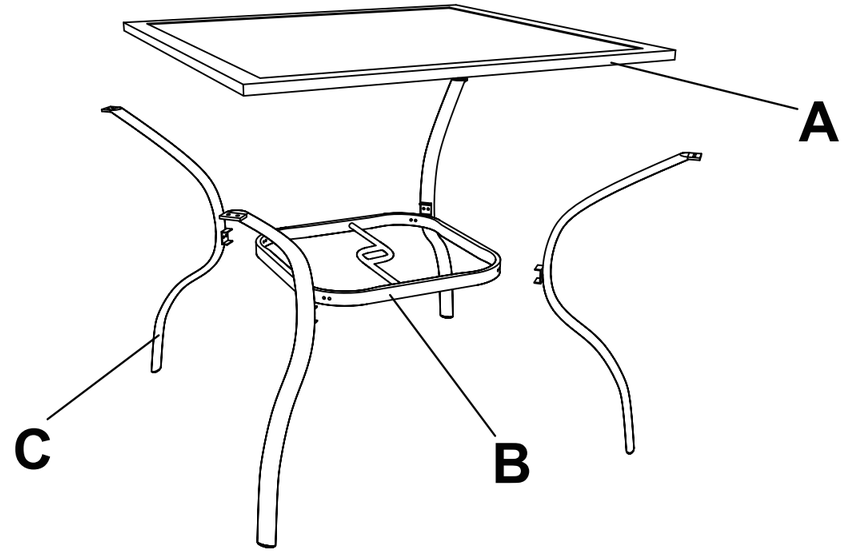

Do not tighten any screws until all the screws have been inserted into their holes; otherwise, it may cause some holes to misalign.

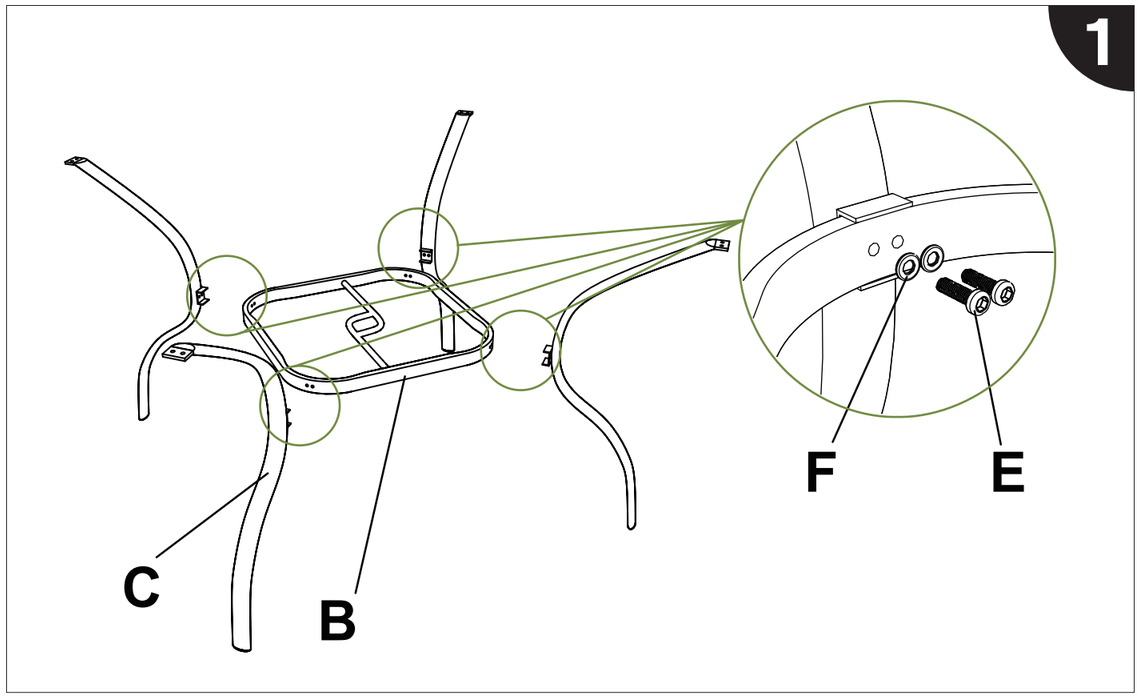

Assembly

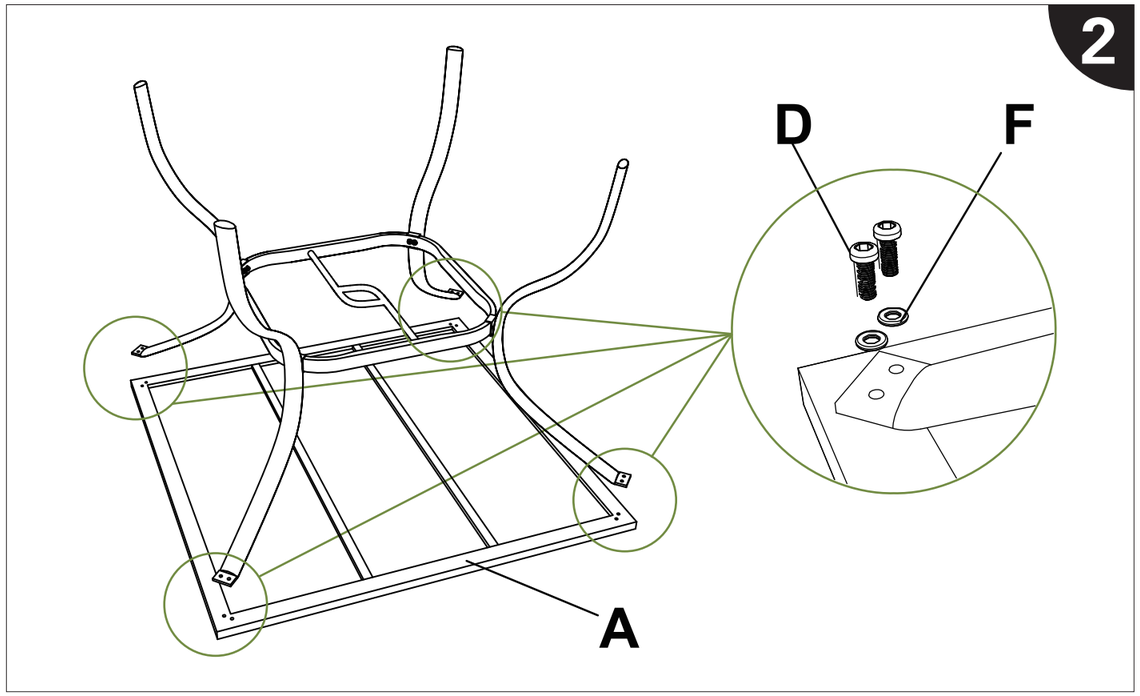

Cleaning and Maintenance

- Clean the furniture with damp cloth, rinse thoroughly. Dry frame parts completely. Do not use bleach, acid or other solvents on the textile or metal parts.
- We recommend the use of furniture covers to protect the product when not in use.
- Inspect and tighten all screws on a regular basis to ensure proper performance and safety.
- In order to prolong the life and beauty of your product, we recommend storing it in a dry and protected area during off season periods.