Please check contents <u>before</u> assembly. If any items are missing or damaged, **<u>do not take the unit back to the store.</u>**

A-FRAME COMPONENTS

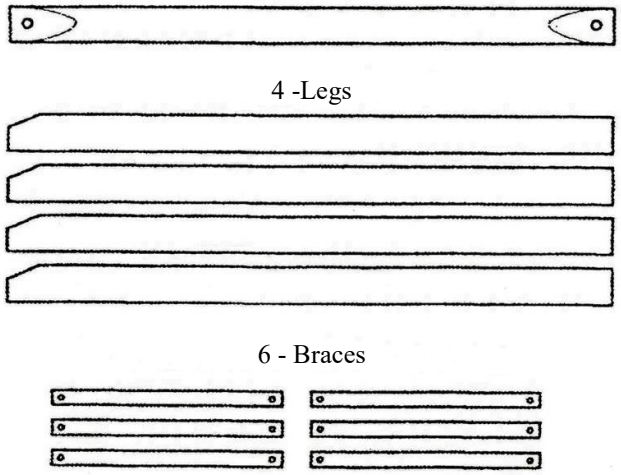

NOTE: Cracks or Checks in logs are part of the natural beauty of cedar logs and should not be considered defects.

A-FRAME HARDWARE
(Shown smaller than actual size)

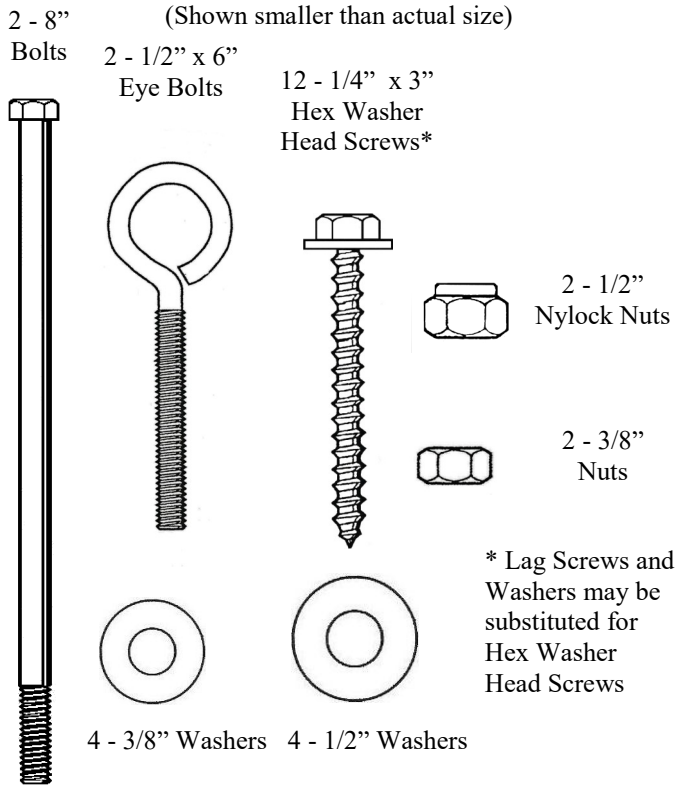

NOTE:

- **Read all instructions before starting.**
- To start hex washer head screws, hammer into wood about 1/2" then use wrench or socket to tighten.
- Do not completely tighten any screws until the unit is fully assembled and setting on a level surface.
- If you have hardware left over after completing your unit, it most likely has been assembled incorrectly, and may not be safe to use.

- **Check all nuts and bolts for tightness before and during each usage season.**

Tools that May Be Needed

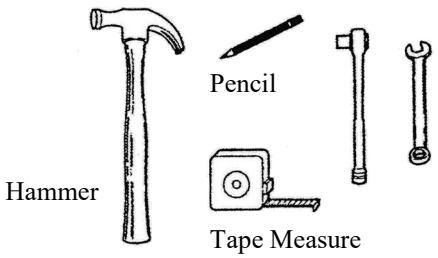

- 3/4" deep well socket
- 9/16 deep well socket
- 9/16" wrench
- 7/16" socket or wrench
- 3/8" socket or wrench
- Power Drill

TIPS

- A battery operated or electric drill will make
- assembly faster and easier.
- Use a good quality penetrating oil or wood deck sealer with a UV inhibitor & an anti-fungal. (Make sure product is intended for outdoor use.)

A-FRAME ASSEMBLY

STEP 1 See figure 1A. Place a 1/2" washer on the 6" eye bolt. Drive the eye bolt through the hole in top rail, on the opposite side from the counter bore. Place 1/2" washer on the 6" eye blot in the counter bore, then place nylock nut on the eye bolt in the counter bore. Tighten with 3/4" socket. Repeat this process on the other side. See figure 1B Lay top rail on the ground with eye bolts down. Lay top of legs parallel to top rail as shown in figure 1B and attach all legs with 8" bolts, 3/8" washers, and nuts, using a washer on both ends of the bolt. Repeat process on opposite side. DO NOT TIGHTEN YET.

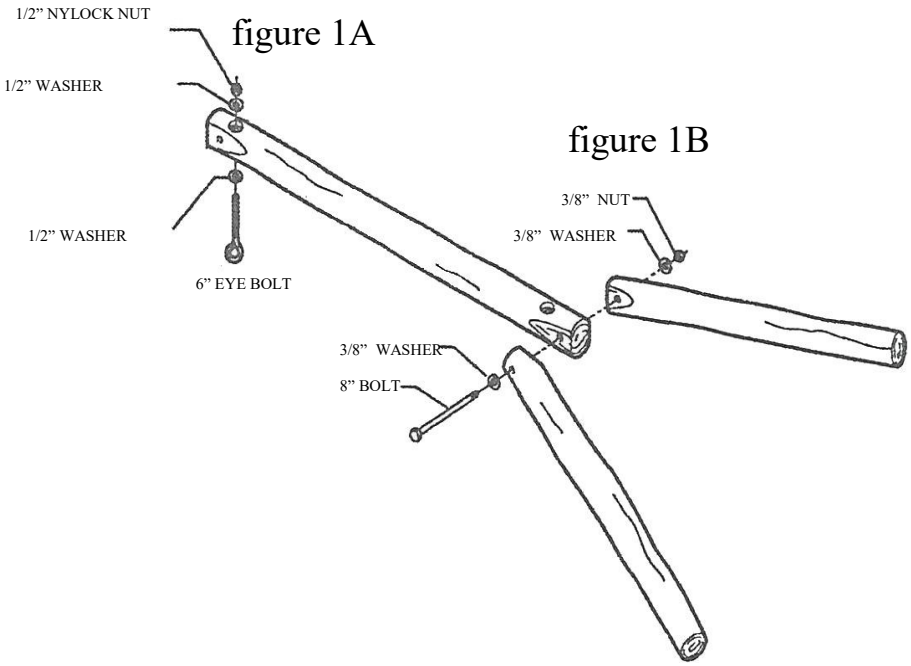

figure 1A

figure 1B

STEP 2 Pre-measure and mark rail and legs for braces. Mark position of leg braces 32" from the top of the legs as illustrated in figure 2. Mark position of rail to leg brace 22 1/2" from the end of top rail and 24" from the top of legs as shown in figure 2.

This will set your swing seat at an average height from the ground. If you wish to raise the seat higher, attach leg braces more than 32" from the top of the legs. To lower the seat height, attach them at a point less than 32" from the top of the legs.

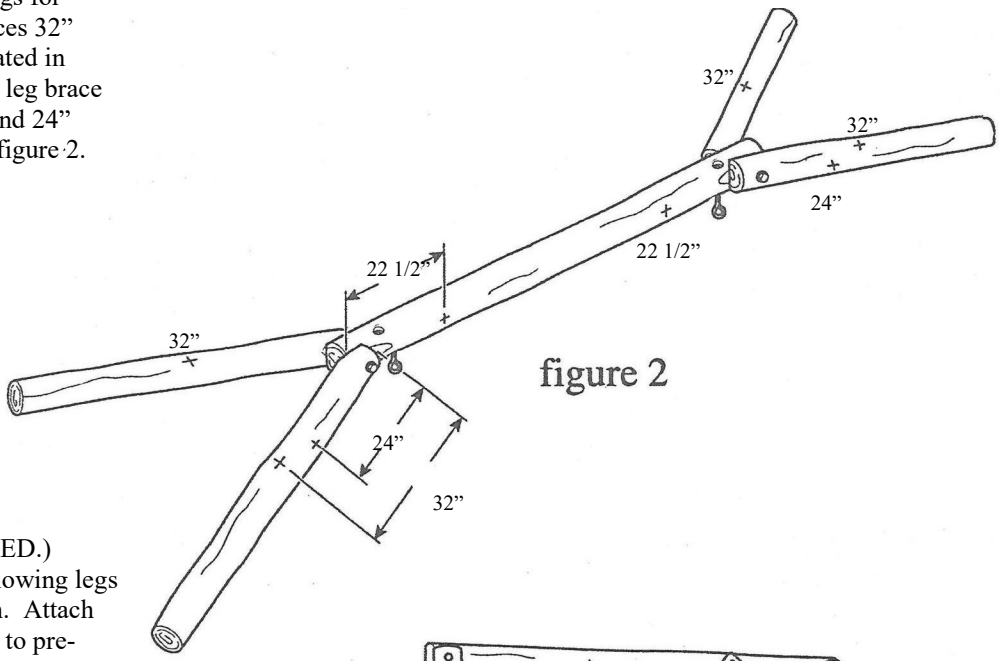

figure 2

STEP 3 (TWO PEOPLE RECOMMENDED.) Lift top rail with legs attached allowing legs to swing into position underneath. Attach braces (as illustrated in figure 3) to pre-marked positions tapping 3" hex washer head screws with a hammer to start them into legs and tightening them with a 7/16" wrench. After all 6 braces are attached and frame is setting on firm level surface, tighten them securely. Now tighten the nuts and bolts that attach the legs to the top rail with 9/16" wrench, making sure bolts are **TIGHT**.

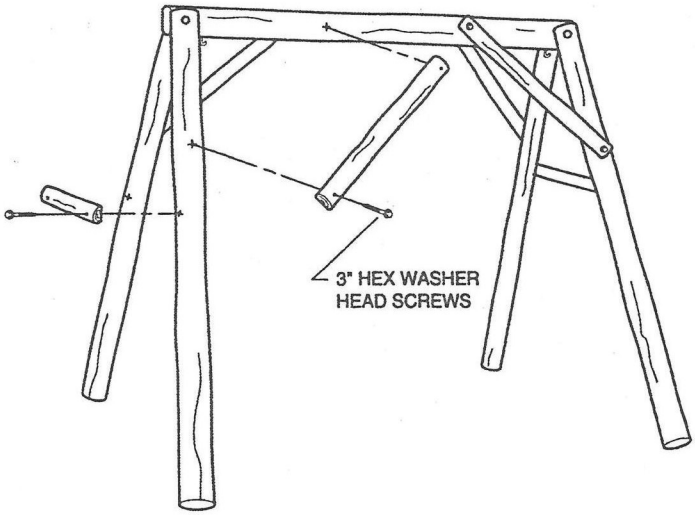

figure 3