Assembly Instructions

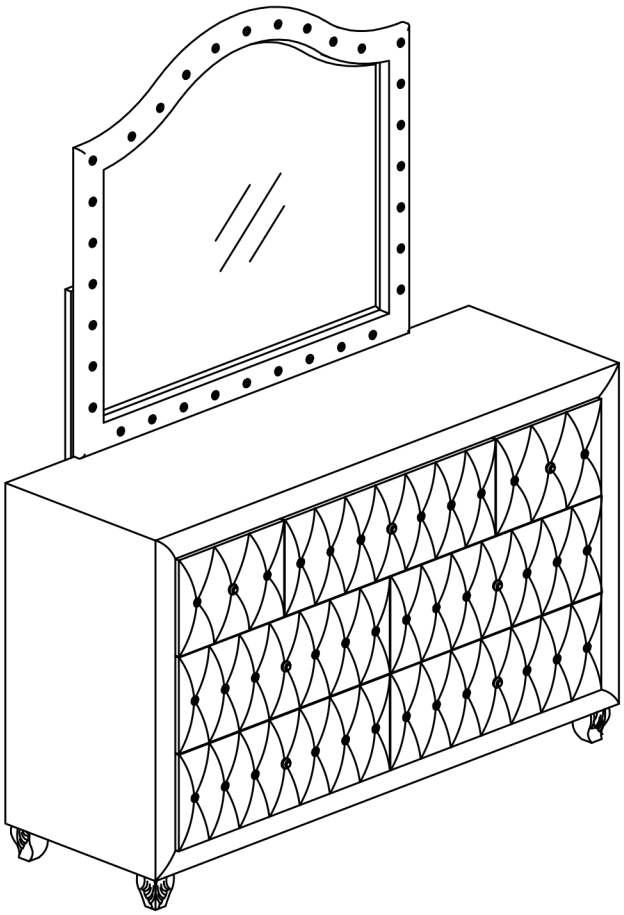

ASSEMBLY RATING

The Assembly Rating is a 5-point system that shows the degree of effort needed in assembling a specific product (with 1 being easy and 5 being difficult). For some products, two persons are recommended.

EASY 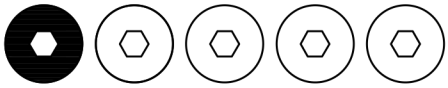 DIFFICULT

Tools Required For Assembly:

Allen Wrench 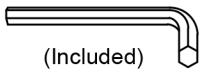
(Included)

2 PERSONS RECOMMENDED

Rev: 18-11-27

ASSEMBLY & CARE ADVICE

FOR YOUR FURNITURE TO LAST,CORRECT ASSEMBLY AND PROPER MAINTENANCE ARE NECESSARY.
PLEASE FOLLOW THE INFORMATION PROVIDED BELOW TO FULLY ENJOY YOUR FURNITURE.

BASIC ASSEMBLY TECHNIQUES

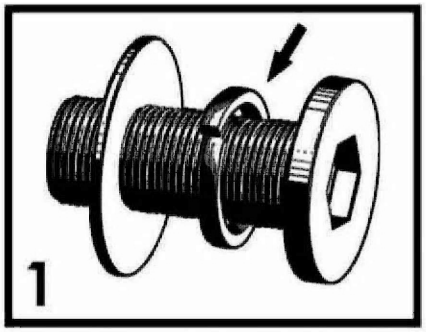

When lock or spring washer is used in an assembly, please make sure the lock or spring washer is placed between the larger flat washer and the head of the screw or bolt.

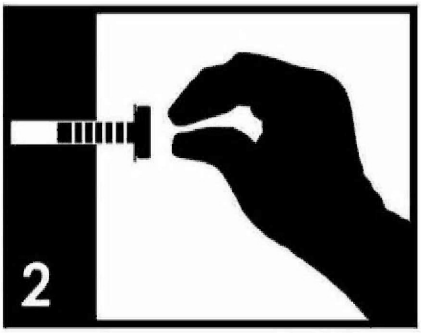

Position each part correctly and insert screws or bolts into their respective holes by hand tighten or using the proper hand tool. Only tighten when step is completed or when instructed to do so.

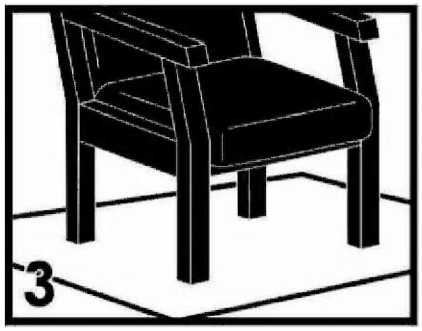

Use cardboard or carpet area when assembling furniture to prevent scratches .Make sure the furniture rests on a flat and level surface with each leg evenly touching the floor. No dragging of products/parts.

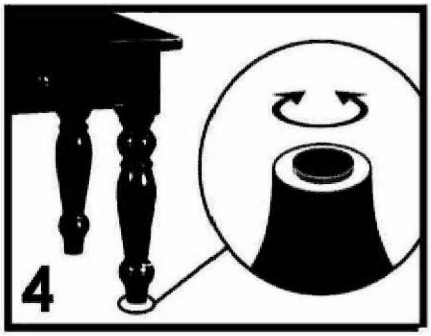

Some furniture comes with height adjustment knobs underneath each leg. To lower or to raise each leg, you need to turn clockwise or counterclockwise, respectively.

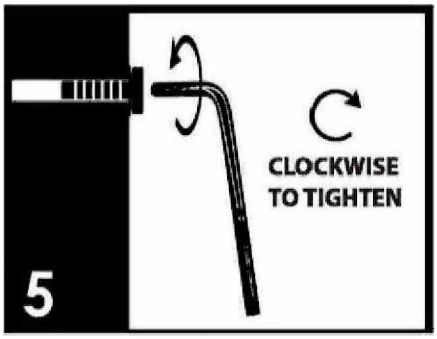

Make sure all parts are properly aligned, then use the appropriate hand tool to completely tighten the bolts or screws. Do not use power tools and do not overtighten.

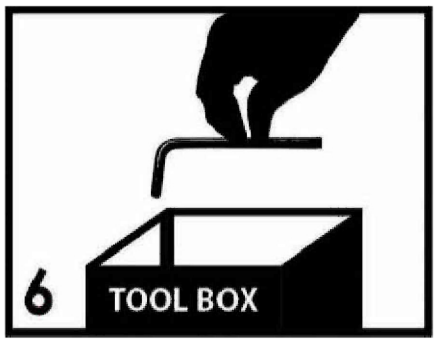

Save the instructions and store the Allen wrench or any supplied tool for later maintenance. After two weeks, check and tighten any loose hardware and repeat again every six months thereafter.

IT IS THE USER'S RESPONSIBILITY TO MAINTAIN THE FURNITURE.THE HARDWARE MAY LOOSEN OVER TIME AND MAY CAUSE THE FURNITURE TO BE WOBBLY AND UNABLE TO SUPPORT ITS INTENDED WEIGHT CAPACITY. THIS MAY LEAD TO COLLAPSE AND MAY CAUSE SERIOUS INJURY.

FAILURE TO FOLLOW THE GUIDELINES ABOVE MAY RESULT IN INJURY AND/OR PROPERTY DAMAGE.

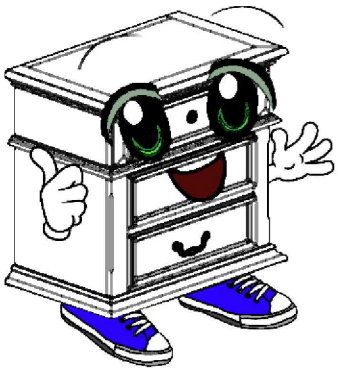

Before you begin, please read Page 2 of "Assembly and Care Advice".

And remember, do not tighten until each step is completed or instructed.

Parts List

#1 x 1pc
Dresser

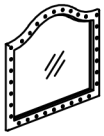

#2 x 1pc
Mirror

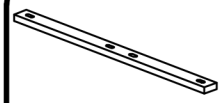

#3 x 2pcs
Support Rail

Hardware List

#A x 8pcs
Bolt Ø1/4" x 1-3/4"

#B x 8pcs
Lock Washer Ø1/4"

#C x 8pcs
Flat Washer Ø1/4"

#D x 1pc
Allen Wrench M4

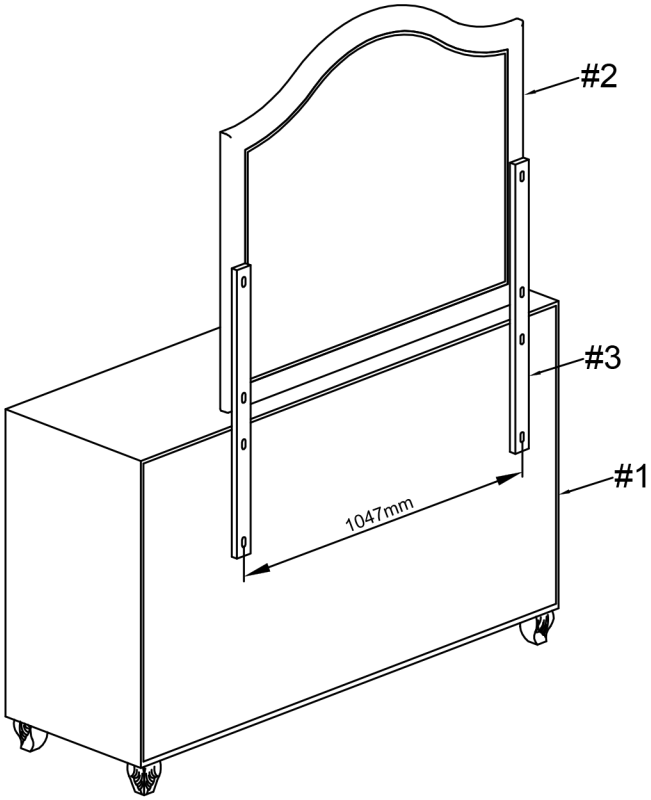

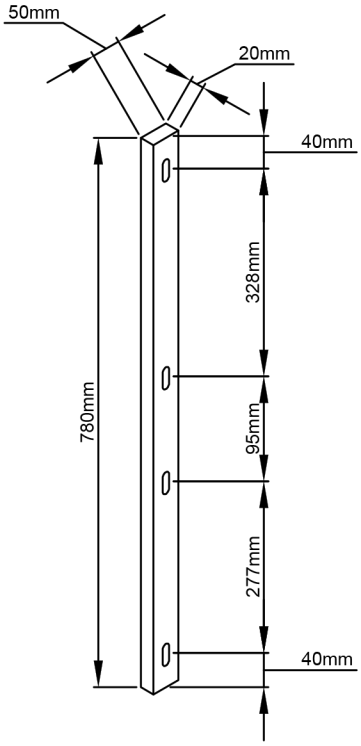

Align mirror supports (#3) to the mirror (#2) and dresser (#1), then secure by using bolts (#A) with washers (#B,C).

#A x 8pcs
#B x 8pcs
#C x 8pcs

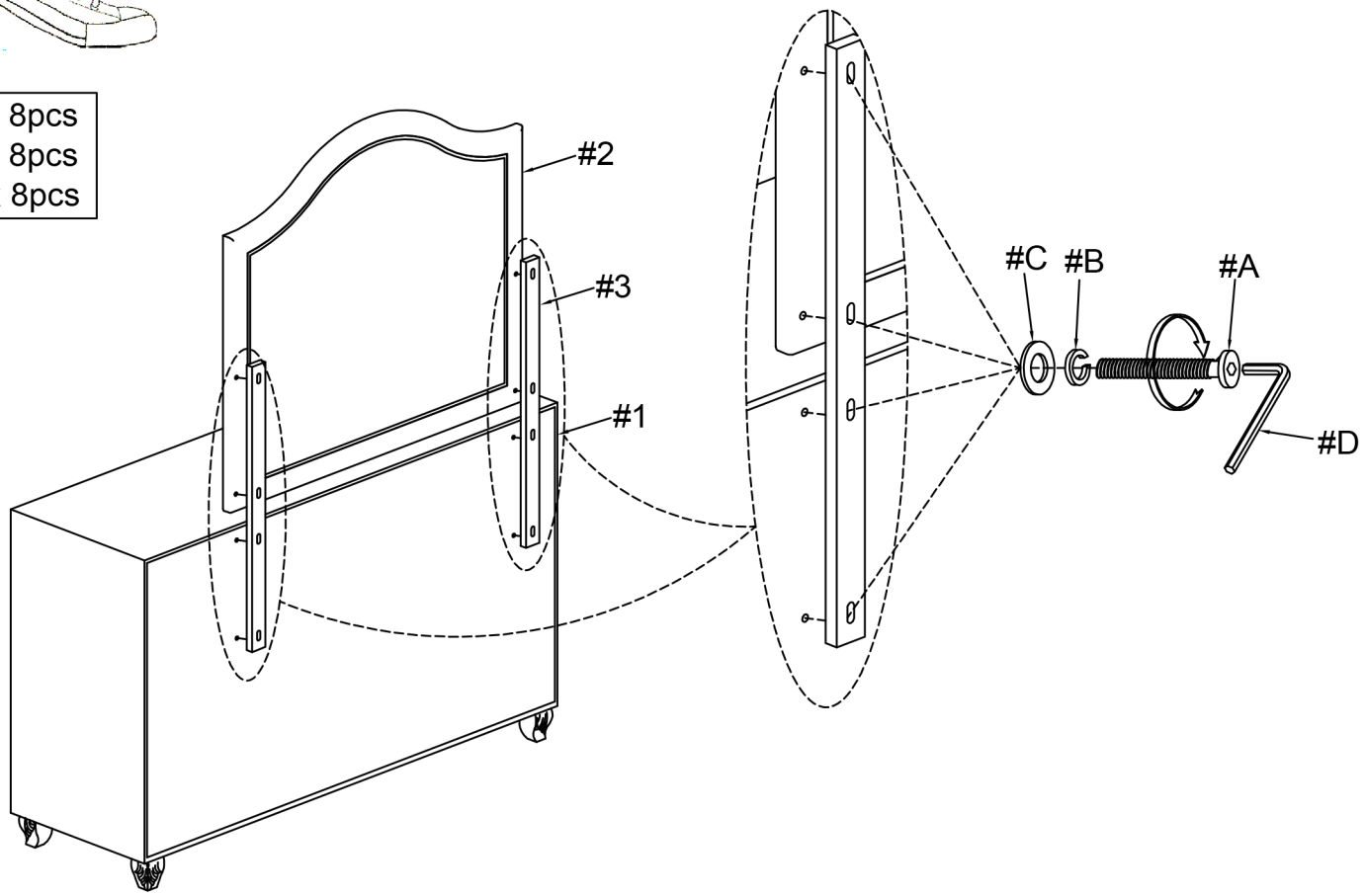

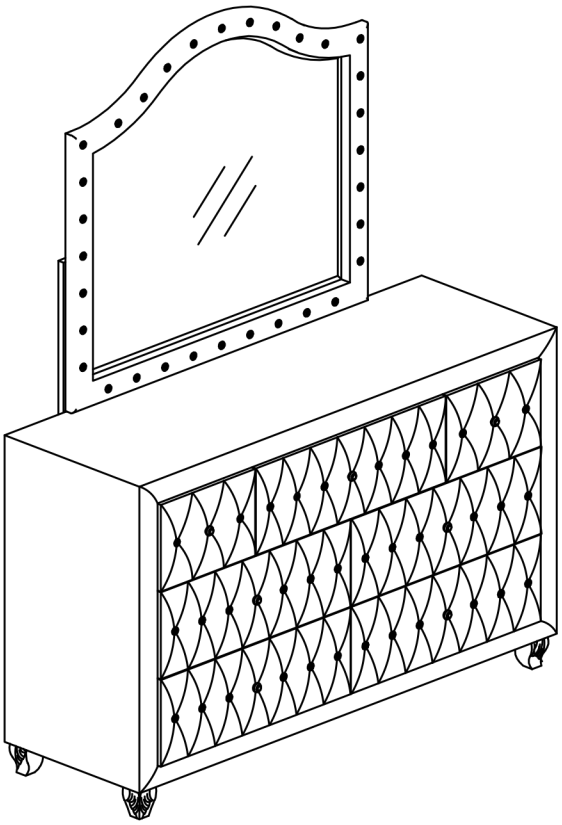

ASSEMBLY IS COMPLETED