OWNER'S INSTRUCTIONS MANUAL

Gas Fire Table

User's Guide and Instruction Manual

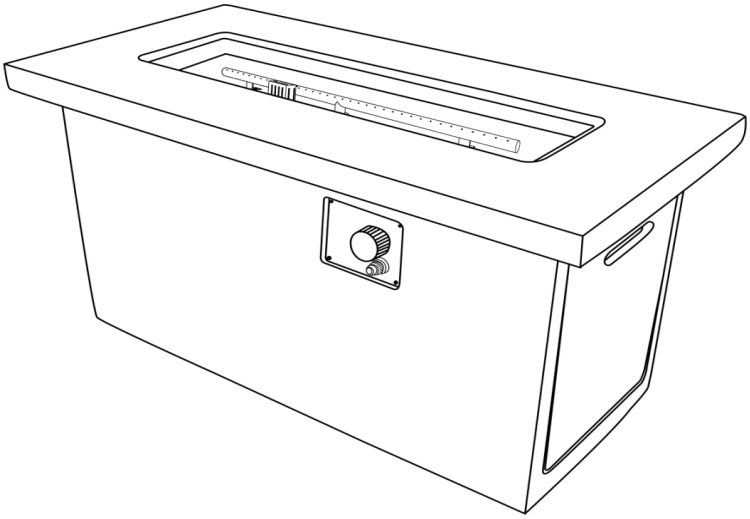

5010198

LIVING SOURCE

If you would like to convert this unit to natural gas, it is required to purchase the conversion kit from Living Source as we supply the compatible kit to properly complete the gas conversion.

Please note that this unit does not include a matching tank holder. Please contact our customer service team if you have any interest in purchasing one.

For more information please contact or our toll-free number

LIMITATION OF WARRANTY AND LIABILITY

NOTICE: Read this Limitation of Warranty and Liability Before Using This Product. If the Terms Are Not Acceptable, Return the Product at Once, Unopened, and the Purchase Price Will Be Refunded.

It is impossible to eliminate all risks associated with the use of this product. Such risks arise from weather conditions, the manner of use or application, or other unknown factors, all of which are beyond the control of the Seller and Manufacturer. These risks can cause bodily injury or death, ineffectiveness of the product, and damage to other property. Seller and Manufacturer will not be held liable for such ricks. By using this unit you are accepting these risks.

Seller and Manufacturer warrant that this product is reasonably fit for the purpose stated in the Owner's Instructions Manual, subject to the inherent risks described above, when used in accordance with the Owner's Instructions Manual under normal conditions.

The Seller and Manufacturer will not be held liable for any claims, losses, injuries or damages resulting from the misuse or handling of this product.

Any claim by buyer or user of this product shall be filed within one (1) year of the date of injury or damage or the claim will be barred. Buyer and user waive any right to file any class action claim for product defect, design defect, or failure to adequately warn of product hazards or safe installation.

This Limitation of Warranty and Liability may not be amended by any oral or written agreement.

WARNING	**FOR OUTDOOR USE ONLY !**
DANGER	**If you smell gas and/or hear a gas hissing sound:** **1.Immediately, SHUT OFF gas to the appliance.** **2.Extinguish ALL open flames.** **3.If odor continues, keep away from the appliance and immediately call your Gas Supplier or Fire Department.**
DANGER	**DO NOT store or use gasoline or other flammable vapors and liquids in the vicinity of this unit and or any other appliance.** **An LP Gas tank not connected for use shall not be stored in the vicinity of this or any other appliance.**
DANGER	**Improper installation, adjustment, alteration, service or maintenance can cause injury or damage to property.** **Read and understand the Owner's Manual thoroughly before installing or servicing this Fire Table.** **If the information in this Owner's Manual is NOT followed exactly, a fire or explosion may result and cause property damage, personal injury or loss of life.**
DANGER	**CARBON MONOXIDE HAZARD.** **This appliance can produce carbon monoxide, which is odorless.**
	**Using it in an enclosed space can kill you.** **Never use this appliance in an enclosed space such as inside a camper, tent, car or home.**

Save this Owner's Manual and these instructions for future use.
If you are assembling this unit for someone else, give this Owner's Manual to them to read.

5010198

Any questions regarding natural gas, please call Monday-Friday,8am-5pm PST.

LIVING SOURCE

Congratulations on your new LIVING SOURCE purchase!

Before You Begin

1. **Check for damaged or missing parts. For any questions or concerns please call Living source toll free ; Monday-Friday, 8am - 5pm PST, or email to order missing supplies.**
2. Use the carton as a working surface to prevent product damage during assembly.
3. Gather all tools prior to assembly.

Safety Information

Before you assemble or operate this unit, please carefully read this entire manual. Failure to do so may result in a fire explosion, injury or death.

NOTE: You must follow all steps to properly assemble this heating item. Make sure the gas valve is turned "OFF" before assembling. Do NOT attempt to assemble without proper tools.

Contact

If you have any questions or concerns, please contact Livingsource:

Toll Free Phone	Monday - Friday, 8am – 5pm EST
Email	
Online	

Part A.	SAFETY INFORMATION
Before you assemble or operate this unit, please read carefully this entire Owner's Manual. Failure to do so may result in a fire, explosion, injury or death.	
 WARNING	The installation of this unit must adhere to local codes or either the National Fuel Gas Code, ANSI Z223. 1/NFPA54, ORCAN/CGA-B149.1, National Gas and Propane Installation Code.
• THIS UNIT IS INTENDED FOR OUTDOOR USE ONLY ! This product shall be used outdoors, in aventilated space and shall not be used in any enclosed area.	
• This unit can be converted to natural gas. Please contact customer service for more information	
• Do not use any solid fuel or charcoal for this unit.	
• When igniting this unit, exercise caution as some gas pooling from the burner may cause the flame to flare that could cause injury.	
• LP GAS WARNING: Lava Rocks/Pumice Stones/ Fire Glass not to exceed 1/4 inch depth above the burner holes. Excessive use of lava rocks/pumice stones/fire glass will suffocate the flame.	
• If the Propane Gas Tank is leaking gas, you can smell, hear a hiss, or sense a leak at the source. Do the following: 1.Disconnect the Propane Gas tank. 2.DO NOT attempt to fix the problem yourself. 3.Move yourself and all persons away from the immediate area. 4.Only when everyone is at a safe distance away from the Fire Table, contact your Gas Supplier or Fire Department for help.	
• Applying too much Propane Gas may result in a pooling effect and will NOT burn. Allow fresh air into the unit so that the remaining gas may escape.	
• DO NOT use a flame to check for gas leaks.	
• The maximum inlet supply pressure: maximum Gas supply 11”w.c. (2.74kPa)	
• Use LP propane tanks with the following dimensions: diameter 12”, height 18”- capacity 20lbs.	
• You must use a Propane Gas Tank that has a collar to protect the Gas Valve.	

- **DO NOT fill tank over 80% full.**
- **The tank system must be set up for vapor with drawal.**
- **STOP using if any part of the Propane Gas Tank is damaged.**
  Rust and dents in tank may be hazardous and should be inspected by a Gas Supplier.
- **DO NOT burn anything other than the provided materials for this Fire Table.**
- **Keep away from the unit for the first 20 minutes after igniting your unit for the first time, as lava rocks/ pumice stones/fire glass could pop out and cause injury. Should any rocks pop out, discard them.**
- **Always ensure that lava rocks/pumice stones/fire glass are completely dry before use.**
  Failure to do so will cause them to crack or pop.
- **DO NOT operate unit until all parts are fully assembled.**
- **DO NOT paint or color any part of this Fire Table.**
- **Unit may be hot while in use, DO NOT attempt to move it while in use.**
- **Never leave this Fire Table unattended while in use.**
- **This unit is NOT intended for cooking.**
- **Keep a safe distance to avoid burning skin or clothing.**
- **DO NOT sit or rest hands or feet on this Fire Table.**
- **Never place hands or fingers onto upper portion of this unit while in use.**
- **Keep all electrical cords and fuel supply hose away from heated surfaces.**
- **Combustible material should NOT be within 72 inches of the top of the unit, and within 48 inches around the entire unit. Combustible materials could be and are not limited to any items that may catch fire such as dry vegetation, wood, branches, leaves, plants, buildings, structures, fabrics, clothing, sawdust, all chemicals, and all flammable liquids.**

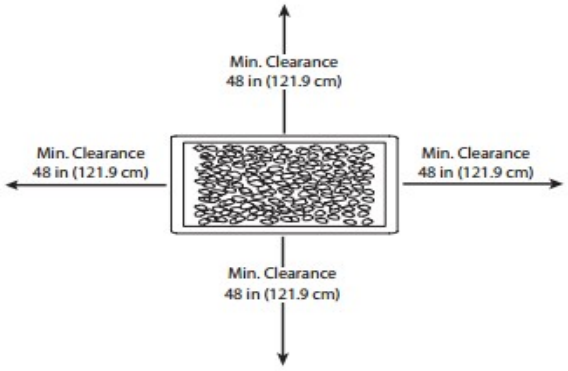

• Keep the appliance area clear and free from combustible material, gasoline and other flammable vapors and liquids.
• If the flame goes out while burning, turn the gas valve off. Wait 5 minutes before repeating the initial lighting procedure. Once you have a flame started, hold down the control knob for 1 minute.
• DO NOT add water into the unit.
• DO NOT operate unit if any part has been under water. Immediately call for a Qualified Service Technician to inspect the appliance. Where necessary, secure Qualified Service Technician to replace part(s) of the Control System and any gas control parts that has been under water.
• DO NOT disconnect any part while the unit is in use.
• DO NOT store a spare Propane Gas Tank on or near this unit.
• This unit is for outdoors use ONLY.
• DO NOT operate on a boat or vehicle. This unit can only be used on any stationary outdoor flat surface ONLY.
• Always remove protective cover before operating(where applicable) and/or use of your Fire Table.
• DO NOT set the Protective Cover(E) over the unit until the Fire Table is turned off and completely cooled down(where applicable).
• Check for leaks after not using the unit for long periods of time.
• Children must never operate this FireTable. Children must be supervised AT ALL TIMES while near this Fire Table.
• The maximum gas supply pressure is 250 psi.
• All installation and repair should be done by a Qualified Service Technician. This unit should be inspected annually and cleaned regularly.
• Inspect all elements of this Fire Table before each use. If there is damage, the burner must be replaced.
• Be aware of the hazards of high temperatures and stay away from the unit to avoid any burns or injury.
•The gas supply tank should be constructed and marked with the specifications for the LP Gas tanks of the U.S Department of Transportation or the National Standard of Canada CAN/ CSA-B339, LP Gas tanks, spheres and tubes for Transportation of Dangerous Goods and Commission.
• The LP Gas tank must have a listed over filling prevention device and a QCCI or Type I, LP Gas tank connection.

• Children and adults should be alerted to the hazards of high surface temperatures and should stay away to avoid burns or clothing ignition.

• Young children MUST BE carefully supervised at all times when they are in the area of this appliance.

• Clothing or other flammable materials shall NOT be hung from the appliance or placed on or near the appliance.

• Any guard or other protective device removed for servicing the appliance shall be replaced prior to operating and use of this appliance.

• Installation and repair(s) should be done by a Qualified Service Technician.
The appliance should be inspected before use. If you suspect there are issues, contact a Qualified Service person.
More frequent cleaning may be required as necessary. It is imperative that the control compartment, burners and circulating airways of the appliance are kept clean.

When APPLICABLE:

• Keep gas tank at least 5 feet away from unit when lit (if it is an external tank).

• Allow Fire Burner to cool down completely before placing lid.

• Keep the hose away from any pathways to eliminate any accidental damage(if it is an external tank).

Use only the Regulator and Hose assembly provided with this unit.

Replacement parts must be supplied directly by manufacturer.

Inspect the Burner before use of this unit.

If the Burner shows any kind of damage, DO NOT attempt to operate the appliance.
For assistance with repair or replacement of the burner or anyother parts, call toll free at 1-844-826-1594; Monday-Friday, 8am-5pm PST or email customerservice@livingsourceintl.com

NOTE: You must follow all steps to properly assemble this Fire Table.
Make sure the Gas Valve is turned "OFF" before assembling. DO NOT attempt to assemble without proper tools.

Part B.	IGNITOR CONTROL BOARD

Here is an exact visual display of the Operation Tablet as found on your FireTable. Read carefully before using.

LIGHTING

1.Read the instructions before lighting.
2.Control knob must be in " OFF " position.
3.Connect propane cylinder(See Manual).
4.Push and turn control knob counter clockwise to Low.
5.Press the igniter button repeatedly to light burner.
6.Release control knob after 45 seconds.
7.If ignition does not occur in 45 seconds,pu sh and turn burner control knob to "OFF" ,wait 5 minutes,fan with newspaper or magazine,and repeat lighting procedure.
8.If ignite does not light burner,use a long match or a long butane lighter.
9.Adjust flame to desired flame with the control knob.

CAUTION:The gas supply must be turned off at the LP-gas supply cylinder when this appliance is not in use.

TURNING OFF

1.Turn and push the control knob clockwise to the "OFF" position.
2.Turn the cylinder valve on the gas tank clockwise to close.

ALLUMAGE

1.Lisez les directives avant l'allumage.
2.Il faut que le bouton de commande soit à la position "ARRÊT"
3.Raccorder la bouteille de propane (voir le guide)
4.Pousser et toumer le bouton de commande dans le sens anti-horaire`a "BAS"
5.Appuyer sur le bouton d'allumage plusieurs fois pour allumer le brûleur
6.Relâcher le bouton de commande après 45 secondes.
7.Si l'allumage ne s'est pas produit pendant les 45 secondes. pousser et tourner le bouton de commande jusqu'à la position "ARRÊT", attendre 5 minutes éventer avec un joumal ou une revue repétér ensuite le procédé d'allumage
8.Si l'allumeur n'allume pas le brûleur ,utiliser une allumette longue ou un long allume-feu au butane
9.Régler la flamme à l'intensité voulue à l'aide du bouton de commande.

ATTENTION: Il faut fermer le robinet gaz sur la bouteille de GPL lorsque l' appareil n'est pas utilisé

EXTINCTION: 1.Tourneret pousser le bouton de commande dansle sens horaire jusqu 'à la position "ARRÊT"
2.Tourner le robinet de la bouteille de gaz dans les sens horaire pour le fermer.

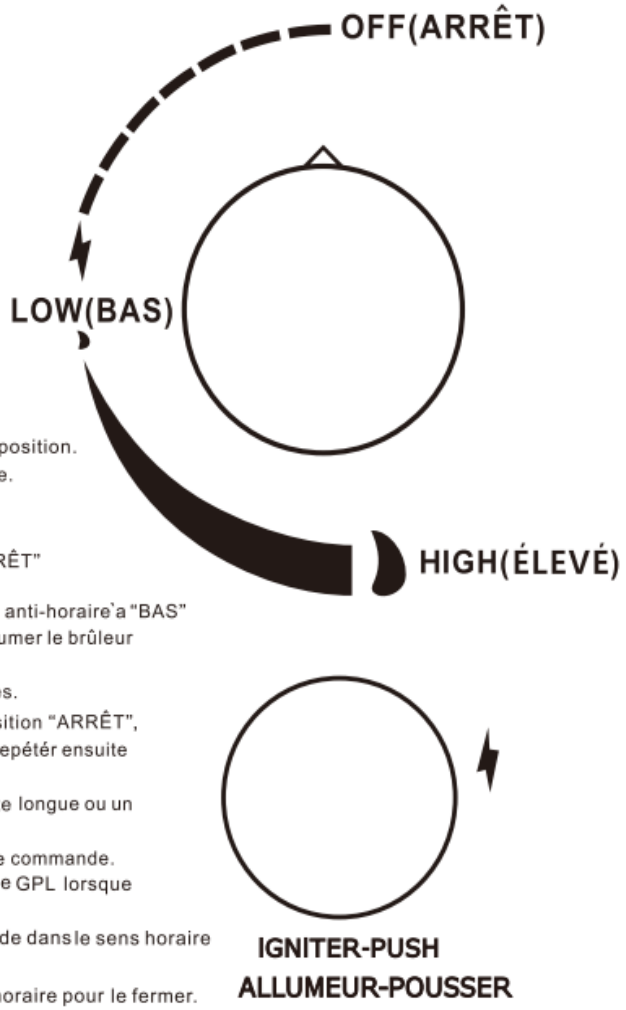

Part C.	**User's Guide to Parts and Accessories of The Regulator, Charge Valve of the Cylinder and Steps to Connecting the Gas Tank to the Fire Table.**

This Safety Information section contains information concerning:
1)The Regulator (pre-connected to the Fire Table).
2)The Charge Valve of the Gas Tank and its relevant Valves.

Note: There are Fire Tables that hold the Gas Tank INTERNALLY and EXTERNALLY.

The Owner/User must know all the different parts: Charge Valves and Regulator.
This picture shows different parts of the Charge Valve of the Gas Tank and the Regulator(12/19) is pre-connected to the Fire Table. The different components and parts of the Gas Tank and the Fire Table Regulator, as show on the picture to the left here.

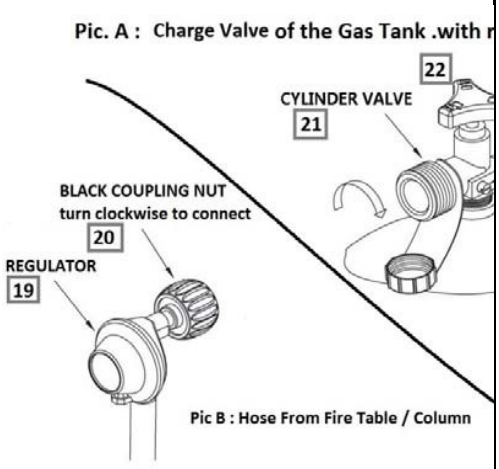

Pic. A: Shows the Charge Valve of the Cylinder with the different Valves and Coupling Nut, these forms the top of the Gas Cylinder.

Pic. B: Shows the Regular pre-connected to a hose.
This Regulator is pre-connected to the Fire Table.

Part D.	Connecting the Fire Table to the Gas Cylinder.
This next step guides you to connect the Fire Table Regulator to the Gas Cylinder.	
Pic. A : Charge Valve of the Gas Tank .with relevant parts 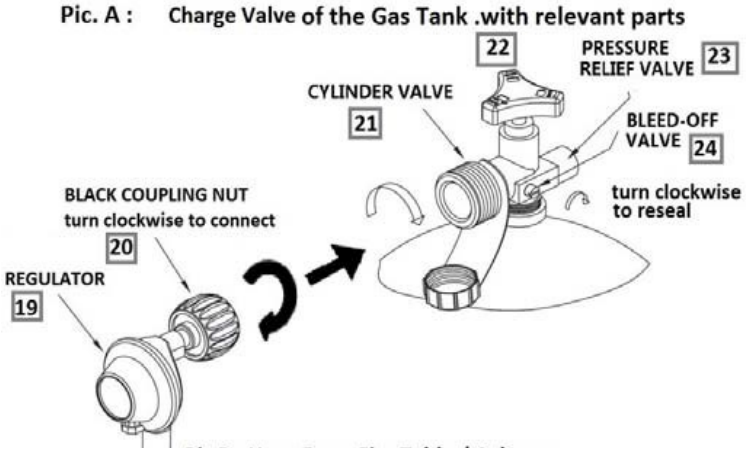 	**Step1: Connect the Black Coupling Nut on the Regulator to the Cylinder Valve.** **Step2: Turn the Black Coupling Nut, fully CLOCKWISE until fully locked into position.** **Step 3: In order to Check for Leaks: Brush and water mixture on all connections.** **Note: Turn the gas supply on.** **If any extra large bubbles form on any connection there may be a leak.** **If you smell gas or a leak is discovered, IMMEDIATELY turn the gas valve off, disconnect Propane Gas tank.** **Do not use the appliance until the leak is repaired.**

Part E.	FIRE TABLE PARTS INTRODUCTION

Your Fire Table is delivered pre-assembled where by there is no assembly actions needed. Here is an introduction to all the parts that forms your Fire Table.
Each part is different and holds its own function.
DO NOT attempt to change and or remove any part(s). In the event of servicing and/or if there are operation issues, contact Qualified Services Technical Support and or seek Qualified Service Technician.

The reference words below demonstrate the internal components of the burner.

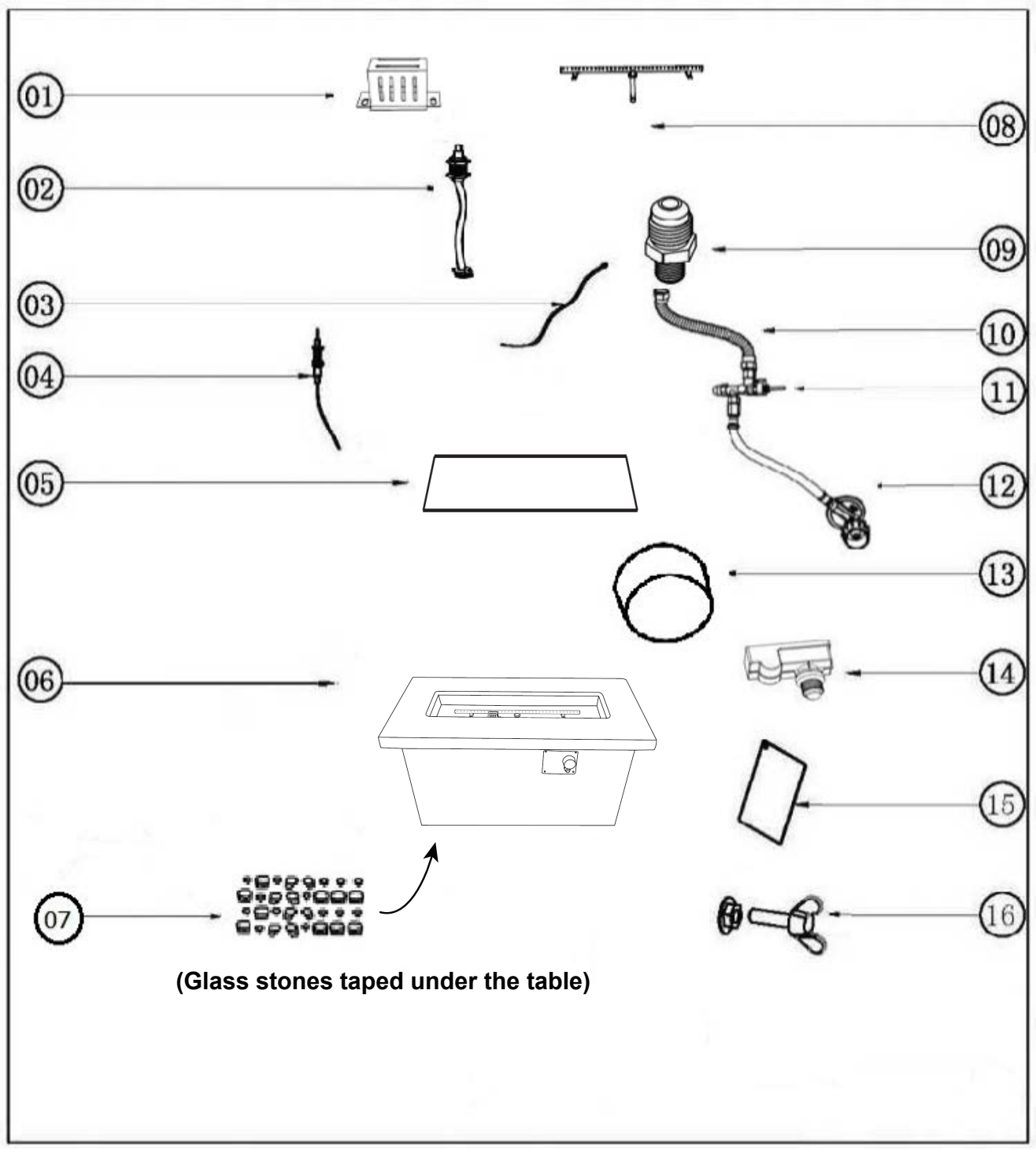

(Glass stones taped under the table)

For your convenience all of the above components are individually described on the following page.

Item	Picture	Description	Qty
01	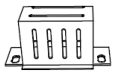	Guard	1
02		Thermocouple	1
03		GroundWire	1
04	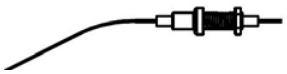	IgnitionPin	1
05		Burner Plate	1
06	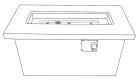	Main Frame of Fire Table	1
07		Glass stones	1
08		Burner	1
09		Nozzle	1
10		CorrugatedPipe	1
11	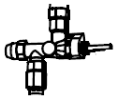	SwitchingValve	1
12		Regulator Valve with Gas Hose	1
13		Control Knob	1
14		Igniter	1
15		ETL WarningLabel	1
16	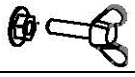	Wing Screw with Nut	1

Part F.	Parts and Accessories of Fire Table

Here is the User's Guide to various Parts and Accessories to form your complete Fire Table.

Before you start to assemble this product, make sure all parts are present.
Compare parts with package contents list.
If any parts are missing or damaged, DO NOT attempt to assemble the product.

Before Beginning Assembly:

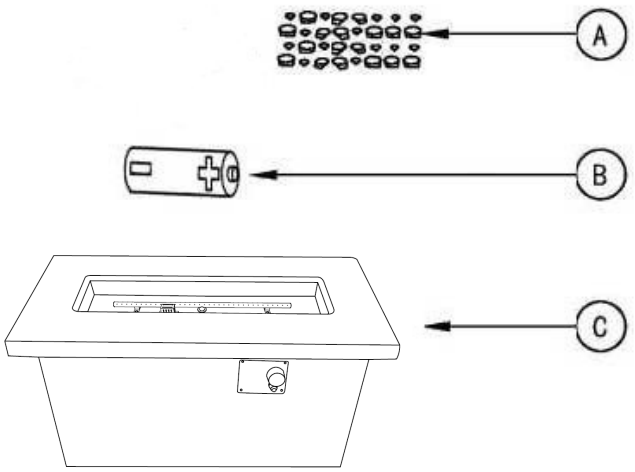

Part G.	Description :		
Item	**Picture**	**Description**	**Qty**
A	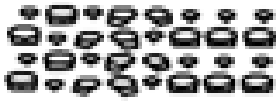	**Glass stones**	**1 Boxes**
B	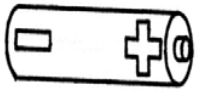	**AA Battery**	**1 pc**
C	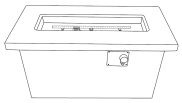	**Main frame of Fire Table**	**1 pc**

Part H.	USER'S INSTRUCTIONS

Here are the basic steps to help you light and use your Fire Table/Column.

STEP 1

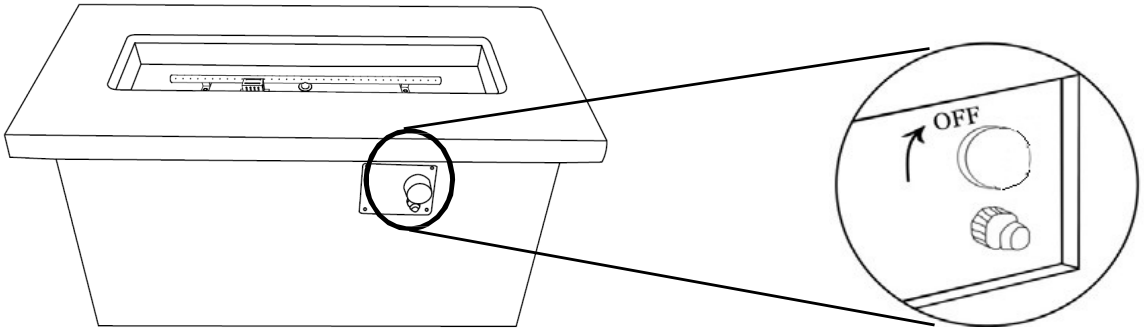

1. Check that the Control Knob(13) for the gass upply system is turned to the “OFF” position before starting any assembly.

2. Place 20 lb. Propane Gas Tank (not included) into the Metal Stand (18).
Make sure the Propane Gas Tank is placed completely into the Metal Stand (18).
Turn the preassembled Wing Screw (17) in a clockwise direction in to the Nut (17) to secure the Propane Gas Tank tightly.

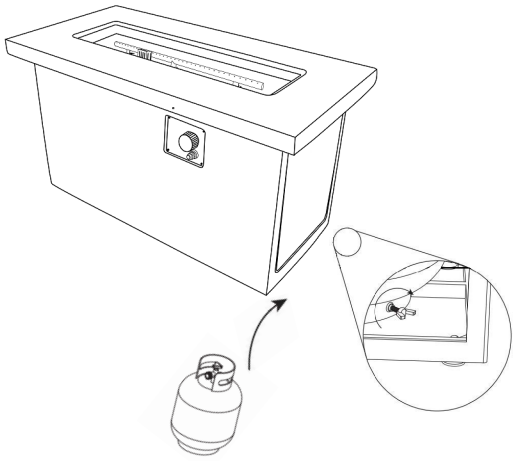

STEP3

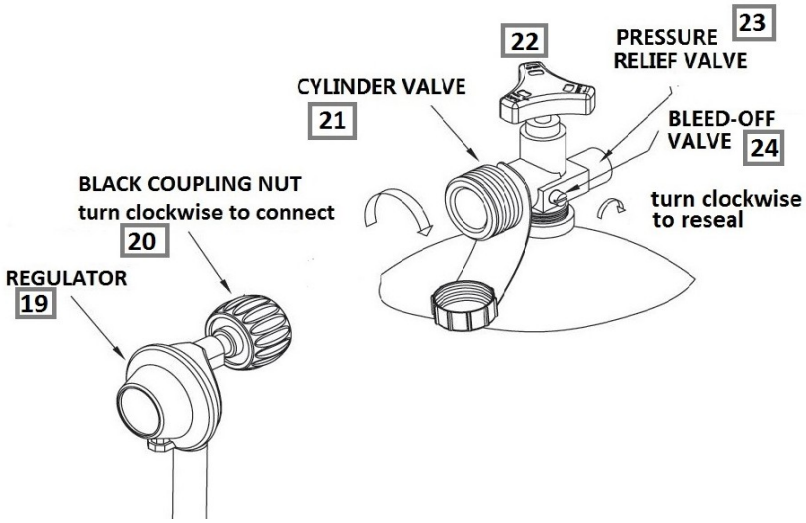

3.Turn the Cylinder Valve(21) on the tank in a clockwise direction to TURN OFF SUPPLY of the LP Gas supply
-Attach the preassembled Regulator(12/19) from the Fire Table to the Cylinder Valve(21) by turning the Black Regulator Coupling Nut(20) clockwise.
Make sure it is fastened securely and tighten connections- by HAND only.

STEP 4

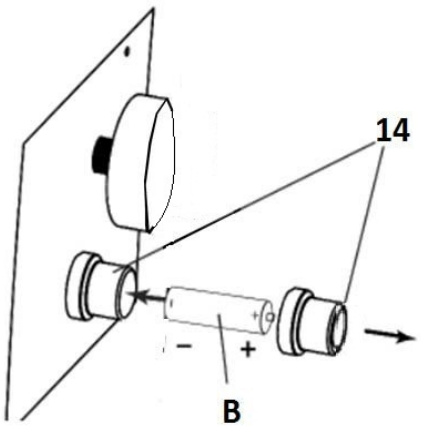

4. Remove the Electronic Igniter Cap(14) on the electronic Igniter(14) by unscrewing and slide the Battery(B) into the battery slot(14). Make sure the positive side of the Battery(B) faces outwards. Screw the Electronic Igniter Cap(14) over the battery, tightly.

STEP 5

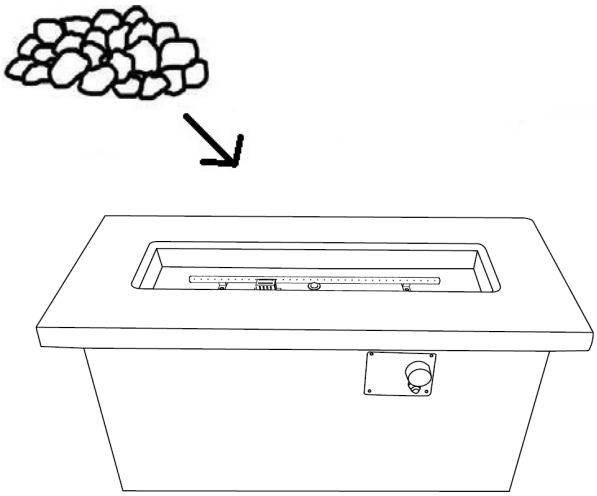

Subject to your preference, you may pour glass stones over the Burner Ring.

The Guard MUST NOT BE BLOCKED. Refer to guidance below:

Do not place more than 1/4 inch depth of glass stones above the burner holes. Doing so will suffocate the flame.

Do not place more than 13.2LB of glass stones above the burner holes. Doing so will suffocate the flame.

WARNING

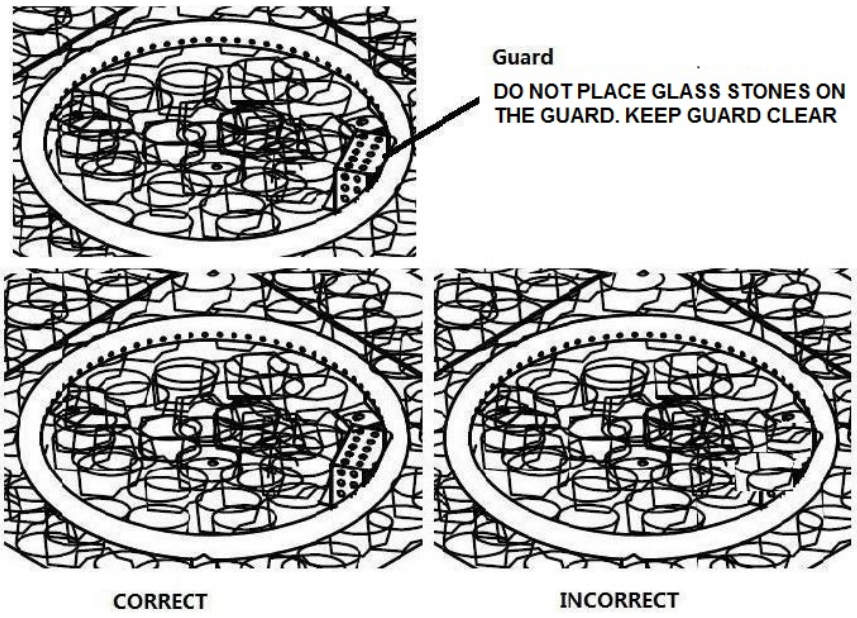

To ensure proper function,the Guard (01) on the Burner (08) should never have glass stones (A) covered over it.

When you turn the cylinder,the gas hose needs to be straightened during use.
Otherwise the hose may melt and cause a fire.

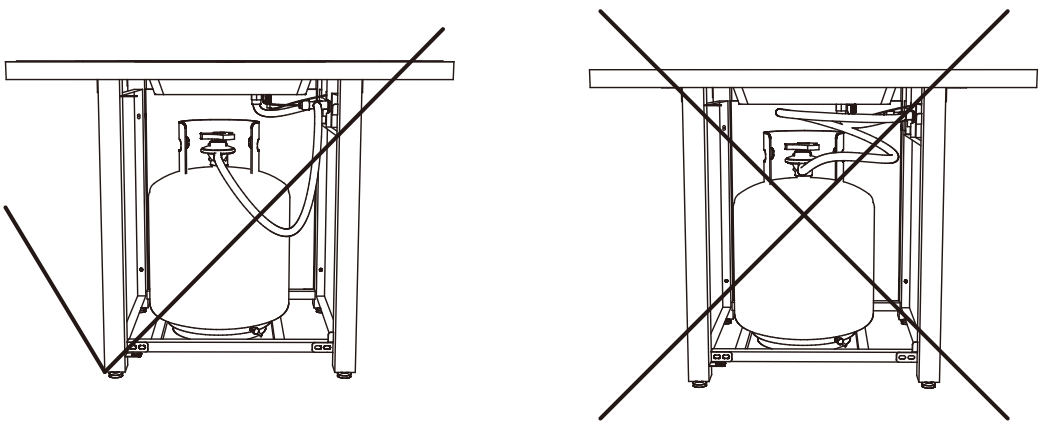

Part I.	SAFETY INFORMATION- OPERATIONS

Before performing a leak test, be sure:

1.) DO NOT press the Igniter.
2.) You are in a spacious outdoor area.

Connect the Propane Gas tank to the Regulator(12/19) and turn the Valve(22) on the unit to the "OFF" position.
Brush soap and water mixture onto all connections.
Turn the gas supply on; if extra large bubbles form on any connection there may be a leak. If you smell gas or a leak is discovered, IMMEDIATELY turn the gas valve off, disconnect Propane Gas tank. Do not use the appliance until the leak is repaired.

Inspect the Gas Hose(12) before using the Fire Table.

If there are signs of wear or abrasion on the hose, you must replace the Gas Hose(12). The Gas Hose must be supplied directly by manufacturer.

Wait 10 minutes after extinguishing flame prior to replacing a lid(if applicable) or protective cover onto the Fire Table.

Part J.	SAFETY INFORMATION USING YOUR FIRE TABLE

Before each use, inspect the Gas Hose(12). Replace Gas Hose(12) if there are any signs of cutting, wear or abrasion.

Before you light your Fire Table, please do the following :

1. Make sure the Control Knob(13) is in the "OFF" position.

2. Open the Door(07)(if the unit has a door) and slowly open the Valve(22) on the Propane Gas Tank by turning the Control Knob(13) counterclockwise

3. Close the Door(07) on the Main Frame(06) of the Fire Table.

4. Push and hold the Electronic Igniter(14) to create sparks within the electrode continue to hold.

5. Push in the Control Knob(13) and turn to the "LOW" position.
Keep holding down the Control Knob(13) to allow gas to flow for 15 seconds.

6. If ignition doesn't occur within a few seconds release the Control Knob(13) and rotate to the "OFF" position.
Wait for 5 minutes for gas to clear and then repeat the above lighting instructions.

7.Once the Fire Table is lit, the flame intensity may be controlled by turning the Control Knob (13) between the "LOW" and "HIGH" positions.

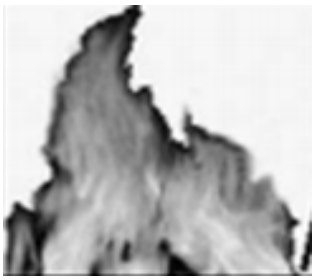

2 inches to10 inches.

8. Observe flame height when lit :

1) Flame color should be yellow/blue.

2) Flame height burns at 2-10 inches high.

Part K.	SAFETY INFORMATION : SHUTTING DOWN YOUR FIRE TABLE /COLUMN

To Shut Down your Fire Table, please do the following:

1. Turn Control Knob(13) clockwise to the “OFF” position.

2. Close the Cylinder Valve(21)on the Propane Gas tank if you DO NOT intend to use it for a long time.

Part L.	MAINTENANCE- FIRE TABLE

• Before performing any maintenance work, ensure the Control Knob(13) is in the "OFF"position and always disconnect Propane Gas tank.

• Keep the Fire Table free and clear from all combustible materials.

• Visually inspect Burner(08) for obstructions and keep tank enclosure free and clear from debris.

• Use a soft brush to get rid of the mild stains, loose dirt and soil after the burner and pumice stones/lava rocks are completely cooled down.
Wipe down with a soft cloth.

• Harsh weather conditions may cause stubborn stains, discoloration and possibly rust pitting.

• If storing this unit inside, disconnect the Propane Gas tank from the Gas Valve(22).
Leave the gas tank outside of your premises.

• Not using manufacturer approved or supplied parts/accessories may result in a defective condition and shall void the warranty of this Fire Table

• Before performing any maintenance work, always :
1) Ensure Control Knob(13) is in'OFF' position
2) Disconnect Propane Gas tank

• Keep the Fire Table free and clear from all combustible materials.

• Visually inspect Burner(08) for obstructions and keep tank enclosure free and clear from debris.

• Place lid (if applicable) and Protective Cover(E) on the Fire Table when not in use.

Part M.	MAINTENANCE : FIRE TABLE SURFACE CARE

• Our Fire Table material has been sealed with a treatment that prevents staining and moisture absorption, and for product longevity this Fire Table would still require proper care and maintenance to ensure the integrity of the surface.

• Please see below for recommendations on maintaining your Fire Table surface for years of extended use :

• Clean any spills immediately to prevent permanent stains or damage to your Fire Table

Use a dry cloth to absorb liquid spills to keep the liquid from spreading.

To prevent the absorption of any liquid into the surfaces, immediately clean the area(s) affected.

• How to Clean your Fire Table surface(s) :

Mix a mild dish soap into warm clean water, use a soft, clean cloth or sponge.
Then proceed to remove surface dirt, stains or mild spills.
Rinse all soap solution off from the surfaces with a damp cloth.
Dry off completely with a dry cloth to avoid water spots/water marks.
Regularly cleaning the Fire Table surface will aid in a longer lasting product.

• DO NOT use petroleum-based or abrasive cleaning products.

DO NOT use any harsh brushes/rough sponges when cleaning the Fire Table surface(s).

• DO NOT place any food on the surface(s) of the Fire Table.

DO NOT eat from the surface(s) of the Fire Table surface.

• Fire Table surface should be covered at all times when not in use.

Cover your product with an outdoor Protective Cover(E) when not in use to protect it from the elements.

Store your product indoors during winter months, leave the gas tank outside.

Avoiding extreme cold temperatures, as extreme cold temperatures may cause cracking of the table top.

Troubleshooting

Problem: Burner will not light using igniter

Please review the Helpful Tips on page 15 for common fixes to this problem.

Possible Cause 1: Electrode and burners are wet.

-Wipe dry with cloth.

Possible Cause 2: Igniter battery is dead or backwards.

-Check that the AA battery is inserted correctly in the igniter (see page 10) or replace the battery. Make sure the plastic wrap on the battery has been removed.

Possible Cause 3: Igniter Pin cracked or broken - sparks a crack.

-Please contact Living source to request the parts.

Possible Cause 4: Residue on Igniter Pin.

-Check for residue on the igniter pin or Thermocouple.
If dirty,thoroughly clean the area.

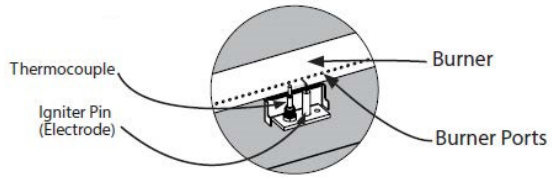

Problem: Burner will not light with match

Possible Cause 1: No Gas Flow

-Check if the LP gas tank is empty. If empty, replace and refill. If the propane tank is not empty, refer to Problem: Sudden drop in gas flow on the following page.

Possible Cause 2: Coupling nut and regulator not fully connected.

-Turn the coupling nut about one half to three fourths a turn, until you feel a solid stop. Do not use tools, tighten by hand only.

Possible Cause 3: Obstruction of gas flow.

- Check for bent or kinked hose.

Possible Cause 4: Spider webs or insect nest in the venturi.

- Clean the venturi.

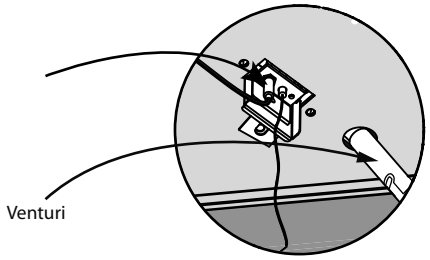

Possible Cause 5: Burner ports clogged or blocked.

-Reference Problem: Irregular flame pattern on the following page. Clean the burner ports as described there.

Problem: The fire table emits a lot of black smoke when in use

Possible Cause 1: Hose from gas fire table is pinched.

-Make sure the hose is not pinched between the fire table and the source of the gas.

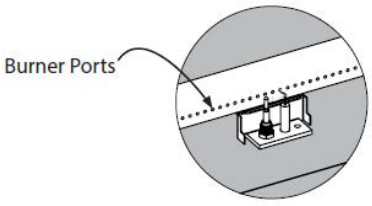

Possible Cause 2: Flame is being obstructed at burner ports.

-Make sure that the gas ports on the burner are free of any lava rocks/fire glass so that the flame can flow naturally.

-Clear out the mixing chamber located before the Venturi.

Possible Cause 3: Mixing chamber of the burn tube is blocked or obstructed.

Problem: Sudden drop in gas flow, or a reduced flame height

Possible Cause 1: Out of Gas.

-Check for gas in the LP gas tank.

Possible Cause 2: Excess flow safety device may have been activated.

-Turn control knob to OFF, wait 30 seconds and light outdoor fire table.
if flames are still too low, reset the excessive flow safety device by turning off the control knob and LP gas tank valve. Disconnect regulator. Turn burner control knob to HIGH. Wait at least 5 minutes. Turn burner control knob off. Reconnect regulator and perform a leak check at tank connection. Turn LP gas tank valve on slowly, wait 30 seconds and then light outdoor fire table.

Problem: Irregular flame pattern, flame does not run the full length of the burner

Possible Cause: Burner ports are clogged or blocked.

-Clean burner ports. Do this by inserting a paperclip into each of the burner ports to ensure they are not clogged.
WARNING: Make sure burner is not on, and has had sufficient time to cool before touching it.

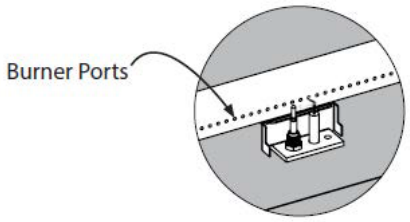

Problem: Flame blow out

Possible Cause 1: High or gusting winds.

-Increase flame to HIGH setting.

Possible Cause 2: Low on LP gas.

-Replace or refill LP gas tank.

Possible Cause 3: Excess flow valve tripped.

-Refer to Problem: Sudden drop in gas flow

Problem: Flame seems to lose heat when burning in cold weather - temperature below 50°F

Possible Cause 1: Ice has built up on the outside of the LP gas tank because the vaporization process is too low.

-Turn the control knob and the LP gas tank to OFF. Replace with a spare LP gas tank and resume burning. Store the spare LP gas tank in a well ventilated area, away from children.

Contact

If you have any questions or concerns, please contact Livingsource:

Toll Free Phone	Monday - Friday, 8am – 5pm EST
Email	
Online	