# Assembly Instructions

**Caution: You must read this before you proceed**

**Care & Maintenance**

- Not for commercial use. For residential use only.
- Furniture may scratch floors. We recommend using furniture pads to protect your floors.
- Do not put hot items directly on furniture surface.
- Do not clean furniture with harsh cleansers or polish.
- Do not place furniture under direct sunlight.
- Do not place furniture near heating or cooling vents.
- Do not write on furniture without a padded barrier to protect the surface.
- Do not place furniture outside . For indoor use only.
- Stains may be removed with mild soap solution and damp cloth.
- Children should not climb or jump on the furniture.
- Dust and pick-up spills using a clean, non-colored, lint-free cloth.

Please look in the box for hardware packs and legs.

Sets often ship in multiple boxes and may arrive a day or two apart.

# Bed

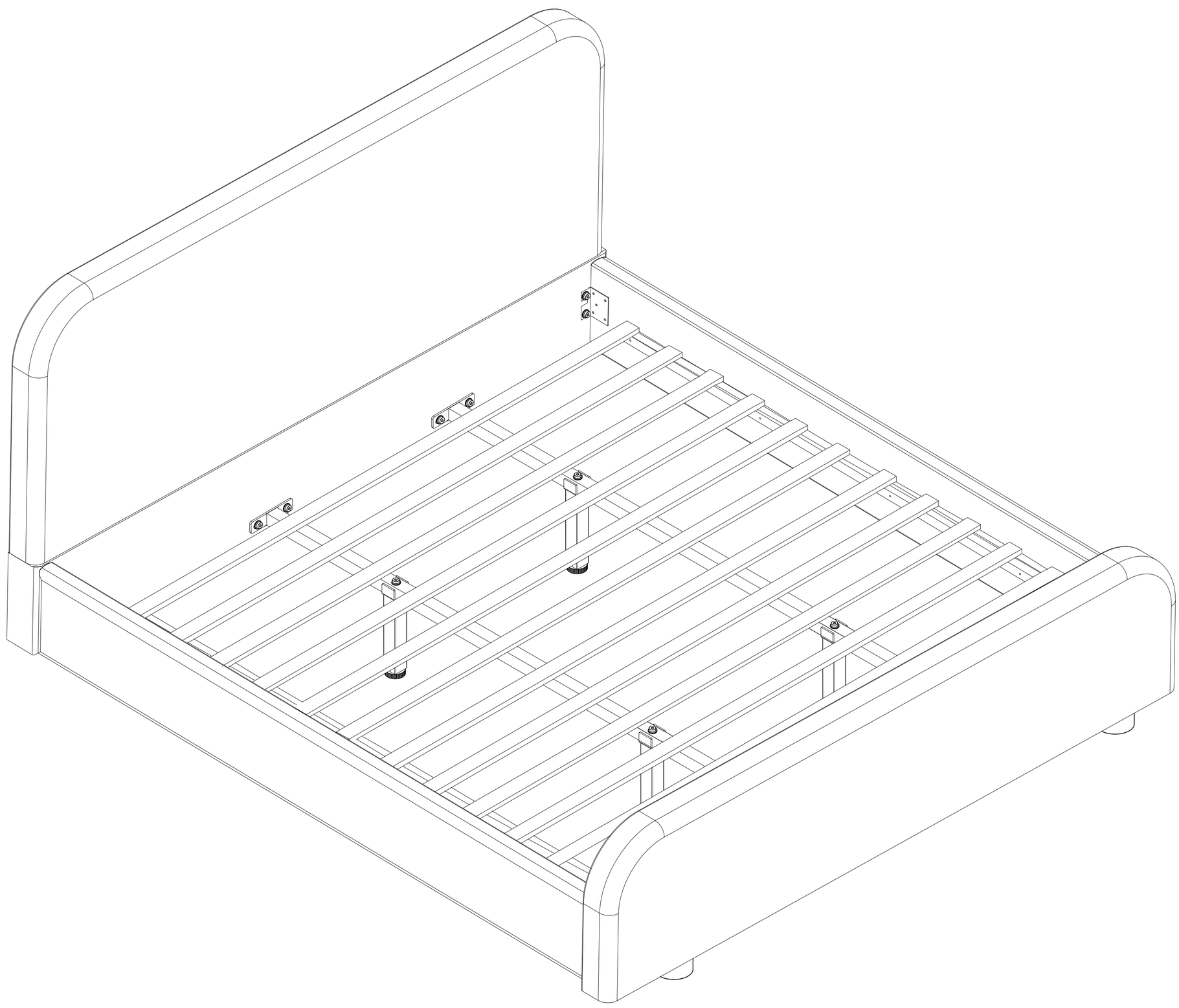

Our product will be delivered to you in 2 packages. The delivery times of these 2 packages may differ, please be patient and thank you for your understanding.

# Part List

| Label | Picture | Description | QTY |
|---|---|---|---|
| 1 | 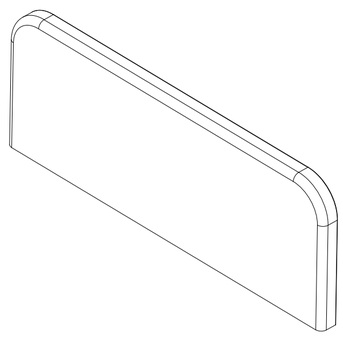 | Headboard | 1 |
| 2 | 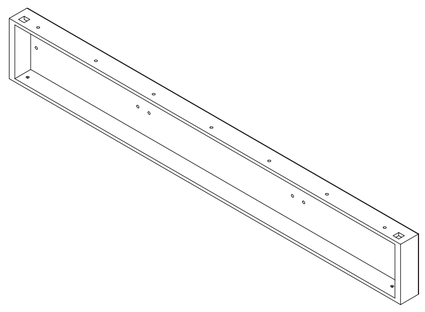 | Base Headboard | 1 |
| 3 | 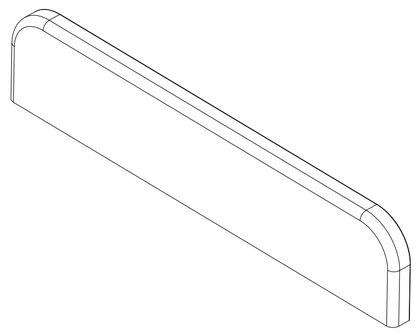 | Foot Board | 1 |
| 4 | 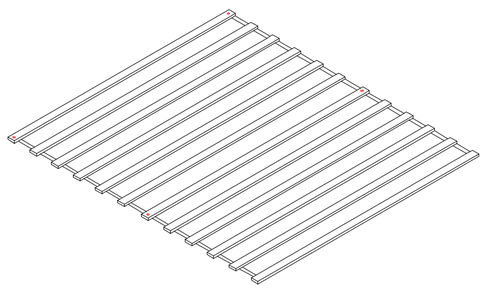 | F-Slat 12pcs | 1 |
| 5 | 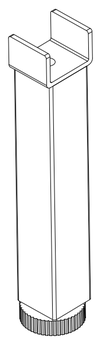 | Middle Support Leg | 4 |
| 6 | 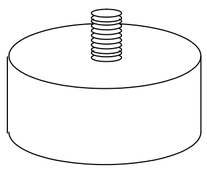 | Wood Leg | 4 |
| 7 | 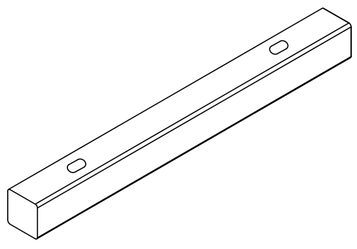 | Headboard side lever | 2 |
| | | | |

# Hardware List

| Label | Picture | Description | QTY |
|---|---|---|---|
| A | 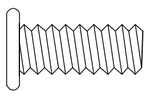 | Bolts (M8x25mm) | 20+1 |
| B | 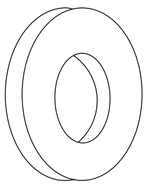 | Flat Washer (M8x19mm) | 31+1 |
| C | 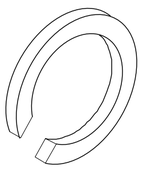 | Spring Washer (M8) | 27+1 |
| D | 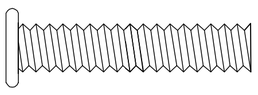 | Bolts (M8x50mm) | 4+1 |
| E | 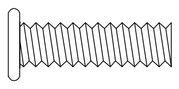 | Bolts (M8x35mm) | 7+1 |
| F | 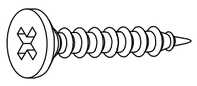 | Screws M4 x 25 | 6+1 |
| G | 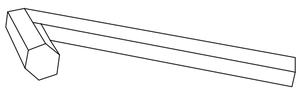 | Allen Wrench M5 | 1 |
| H | 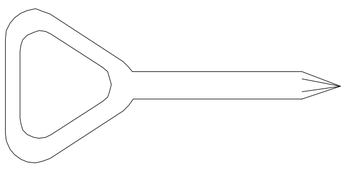 | Allen Key | 1 |

Please note that the shapes of screws A, D, and E are similar.
Please install according to the instructions and distinguish them!

## Part List

| Label | Picture | Description | QTY |
|---|---|---|---|
| 8 | 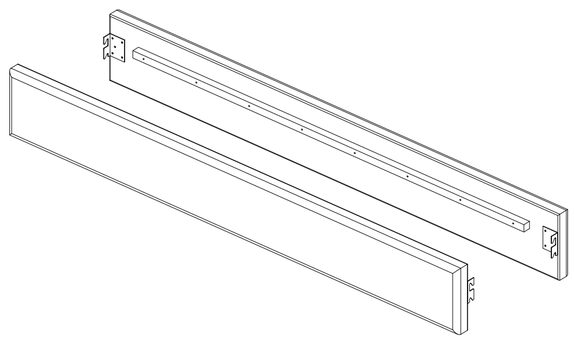 | Side rails support bar | 2 |
| 9 | 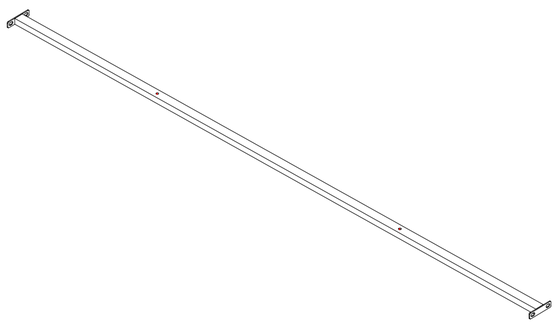 | Middle crossbar | 2 |

Noted: Slats, Middle support leg(4),
Headboard side lever(2),
Legs(4) and hardware bag
are packed behind
the Base Headboard(4).

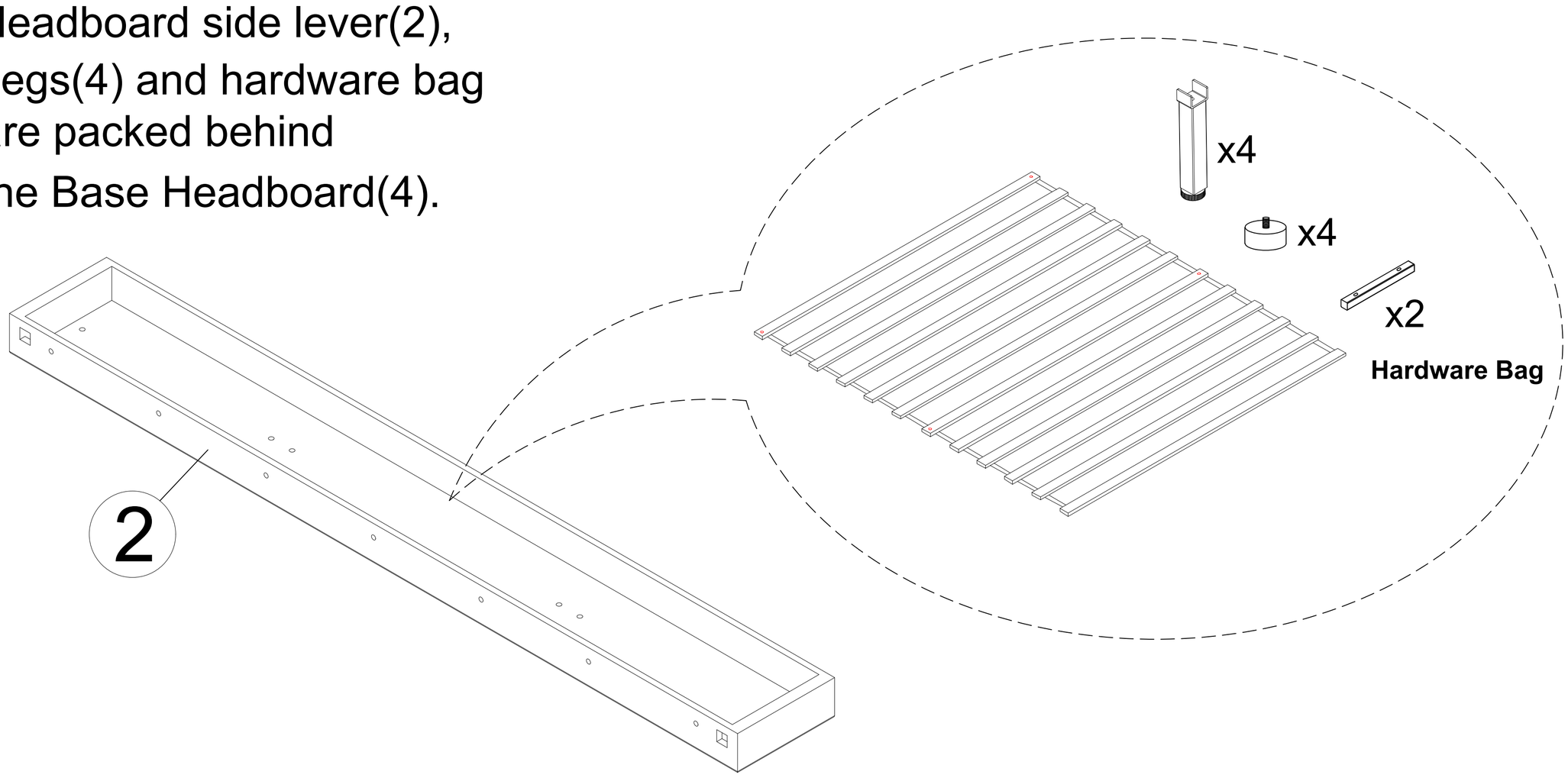

# Assembly Preparation

Before Beginning Assembly:

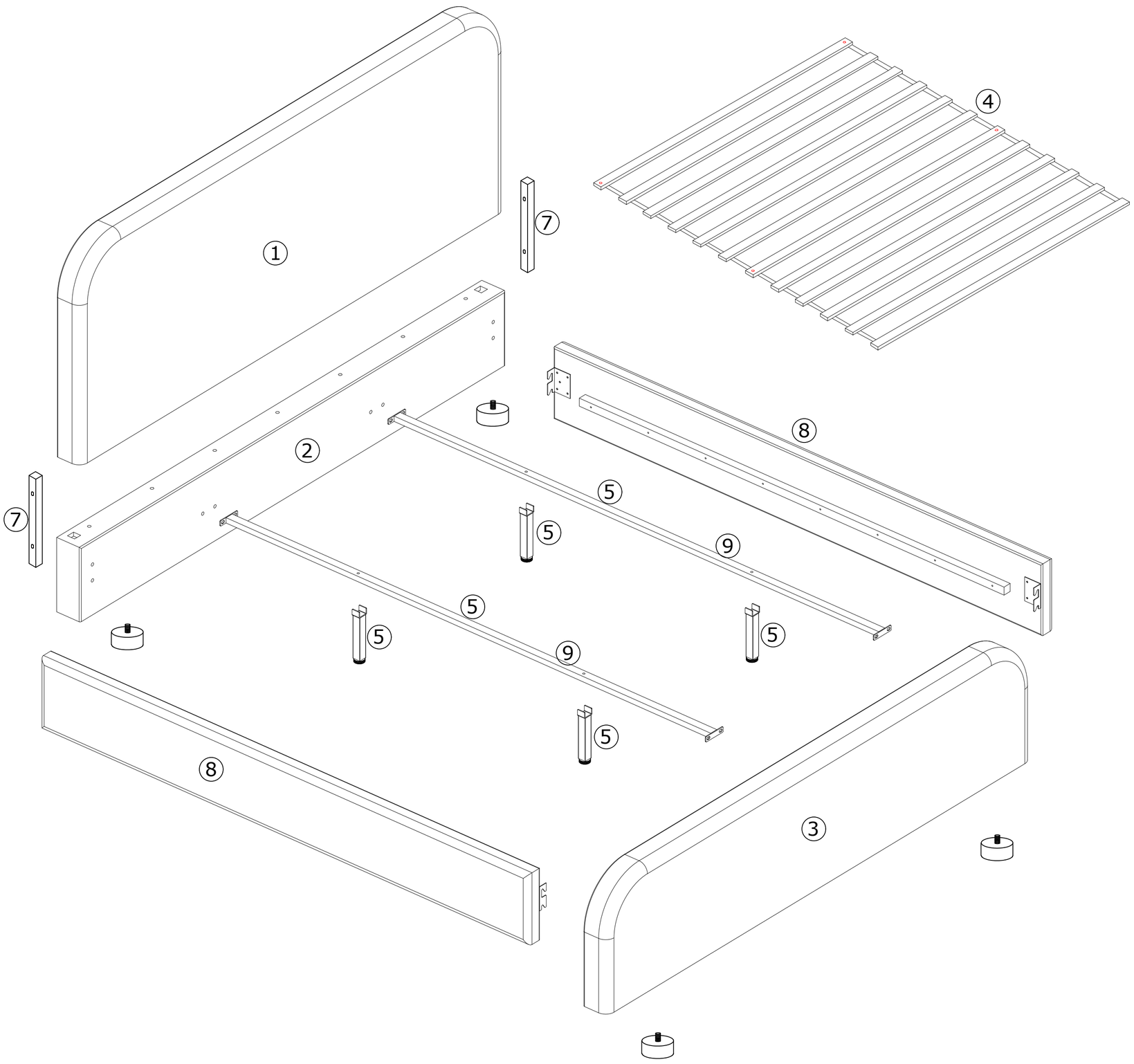


**Hardware**

| Label | Picture | Description | QTY |
|---|---|---|---|
| A | | Bolts (M8x25mm) | 20+1 |
| B | | Flat Washer (M8x19mm) | 31+1 |
| C | | Spring Washer (M8) | 27+1 |
| D | | Bolts (M8x50mm) | 4+1 |
| E | | Bolts (M8x35mm) | 7+1 |
| F | | Screws M4 x 25 | 6+1 |
| G | | Allen Wrench M5 | 1 |
| H | | Allen Key | 1 |

# Assembly Steps

**OVERVIEW**

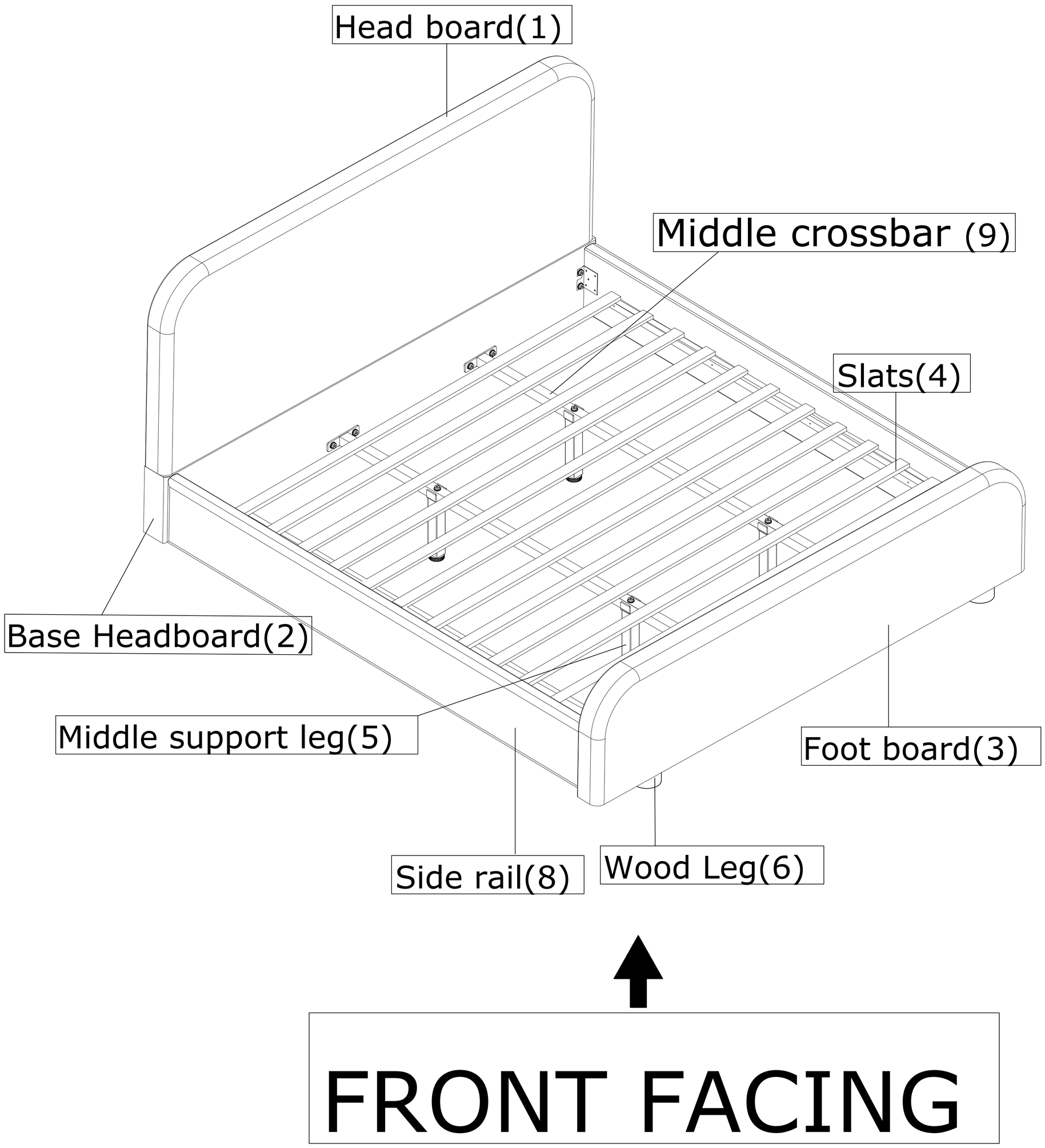


This Bed have multiple parts and may require up to 45 minutes to assemble. To give you an overview of the Bed parts, the above picture is to help you put the various parts into perspective. Please read through the instructions below to familiarise yourself with the parts and steps before assembly.

**Note: It is recommended that you have an adult partner to assist during the entire assembly process.**

# Steps 1: Attach Wood Leg

| | |
|---|---|
| ② | Base Headboard x1pc |
| ③ | Foot Board x1pc |
| ⑦ | Wood Leg x4pcs |

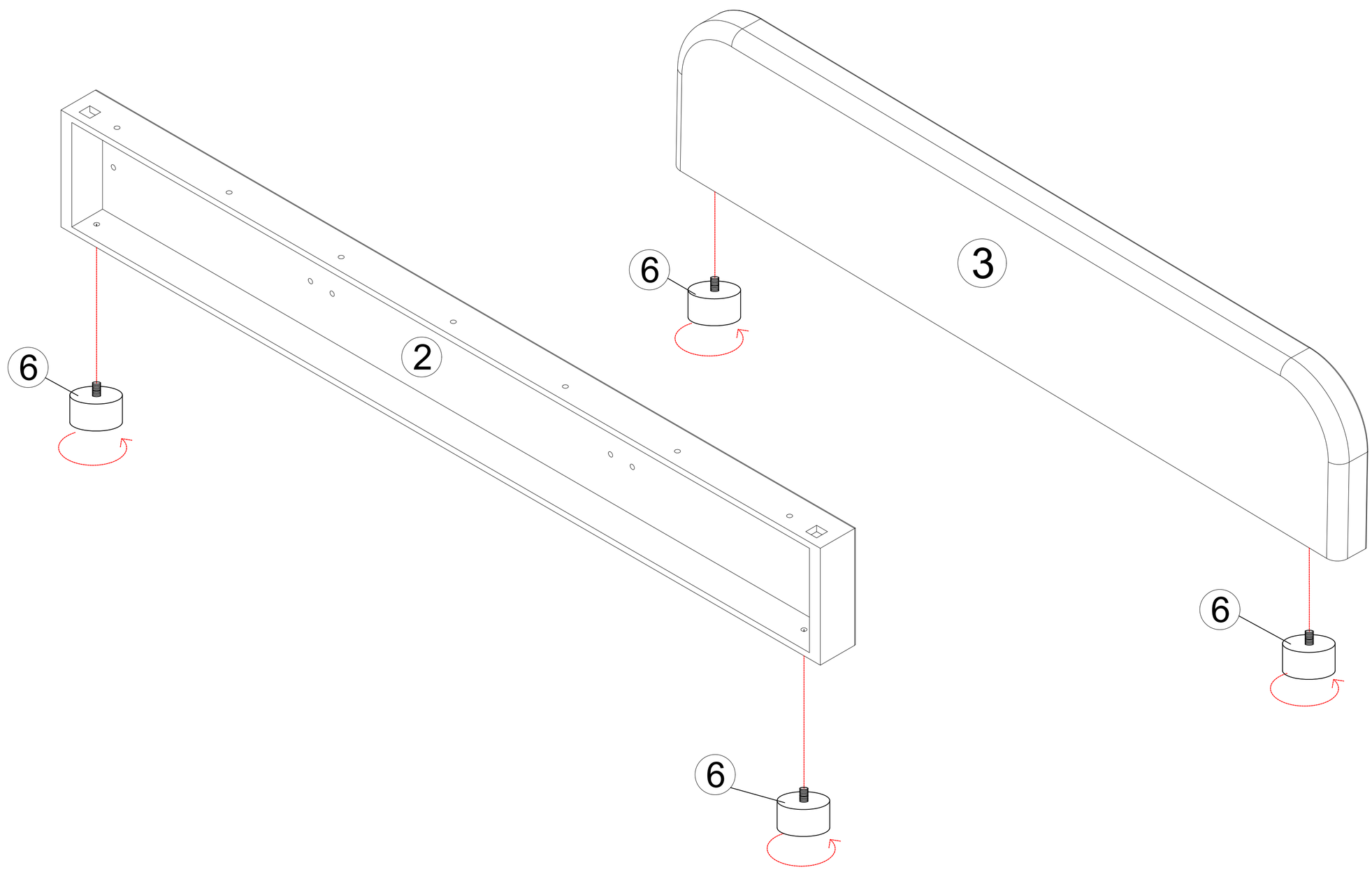


Attach the wooden legs (6) to the base headboard (2) and the footboard(3). Ensure all legs are tightened firmly.

# Steps 2: Headboard Assembly

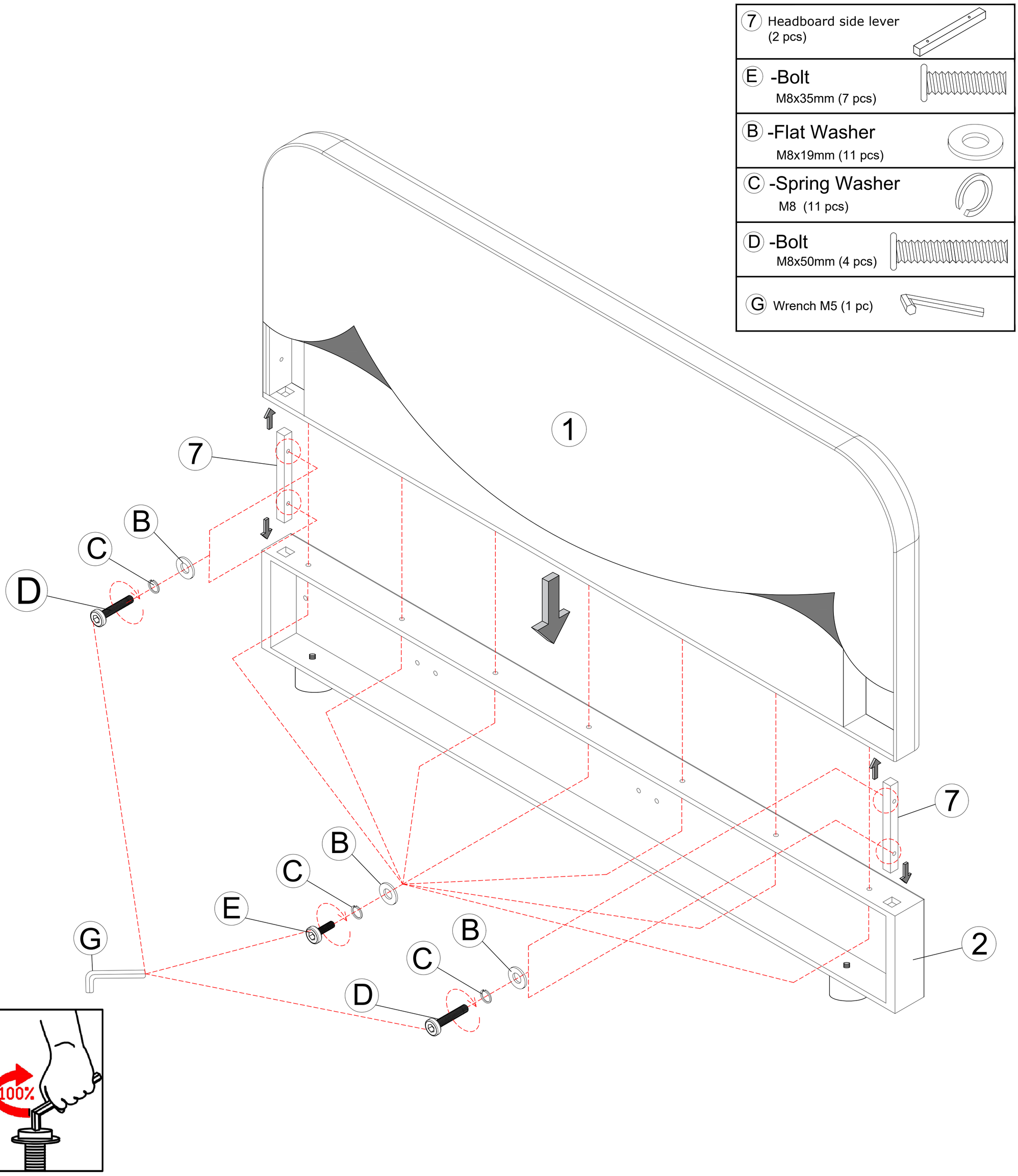


Join the Headboard (1) and Base headboard (2) with two Headboard side lever (7).
By using Bolt (E,D) , Flat Washer (B) and Spring Washer (C) with allen wrench . Ensureall the botls are tightened firmly.

# Steps 3: Attach Side Rail

| | |
|---|---|
| (A) -Bolt<br>M8x25mm (8 pcs) | 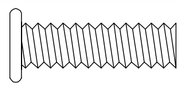 |
| (B) -Flat Washer<br>M8x19mm (8 pcs) | 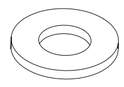 |
| (C) -Spring Washer<br>M8 (8 pcs) | |
| (G) 1 PC | 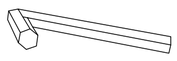 |

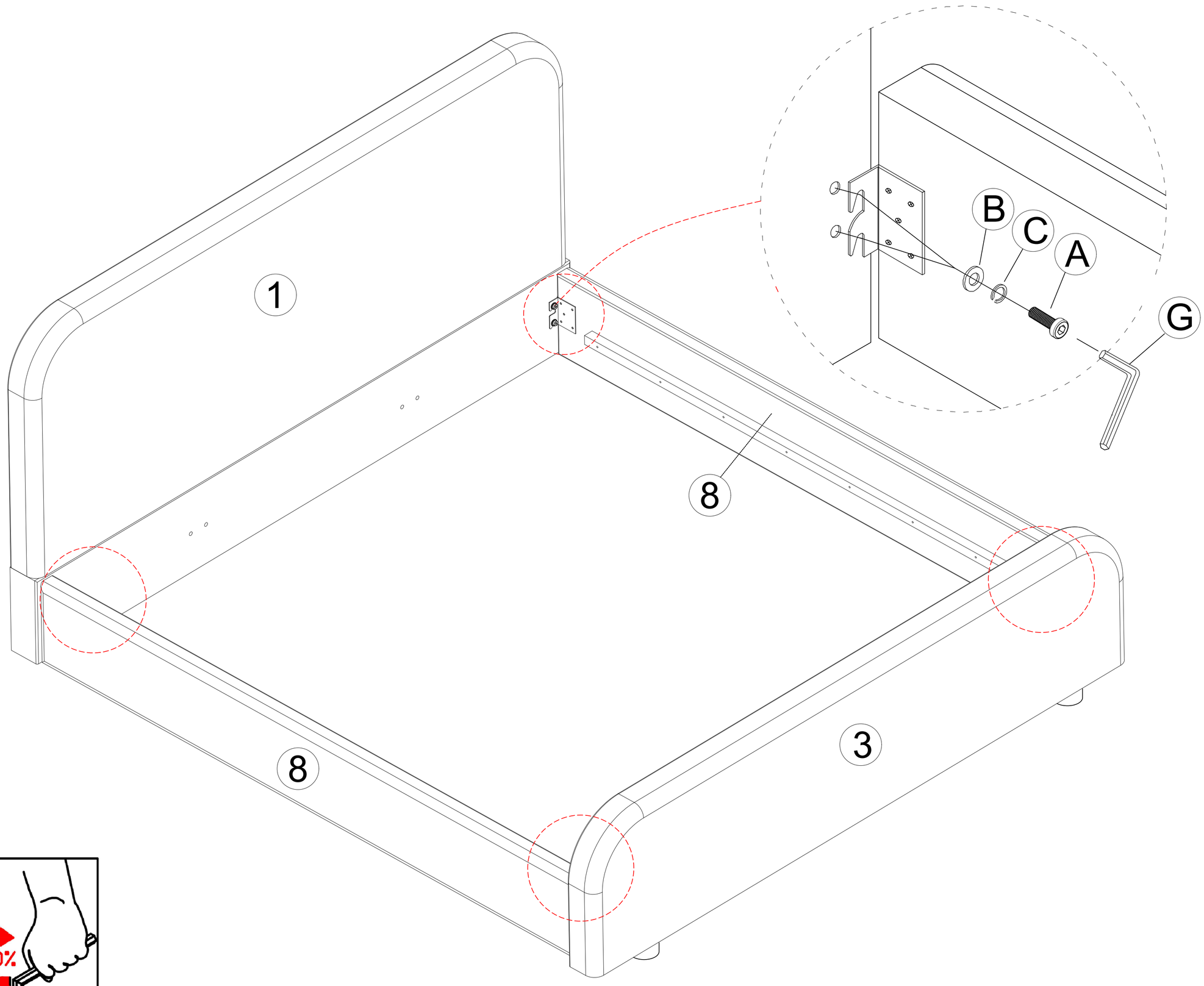


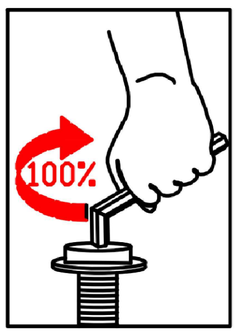


Attach the hinge on the side rails support bar (8) to Base Headboard (2) and Footboard(3), by using Bolt (A) , Flat Washer (B) and Spring Washer (C) with allen wrench (G). Make sure bolts (A) are fully tighten and secure.

# Step 4 : Attach Middle Support Leg to Middle Crossbar

| | |
|---|---|
| 9 Middle crossbar (2 pcs) | |
| 5 Middle Support Leg (4 pcs) | |
| A -Bolt M8x25mm (4 pcs) | |
| B -Flat Washer M8x19mm (4 pcs) | |
| G 1 PC | |

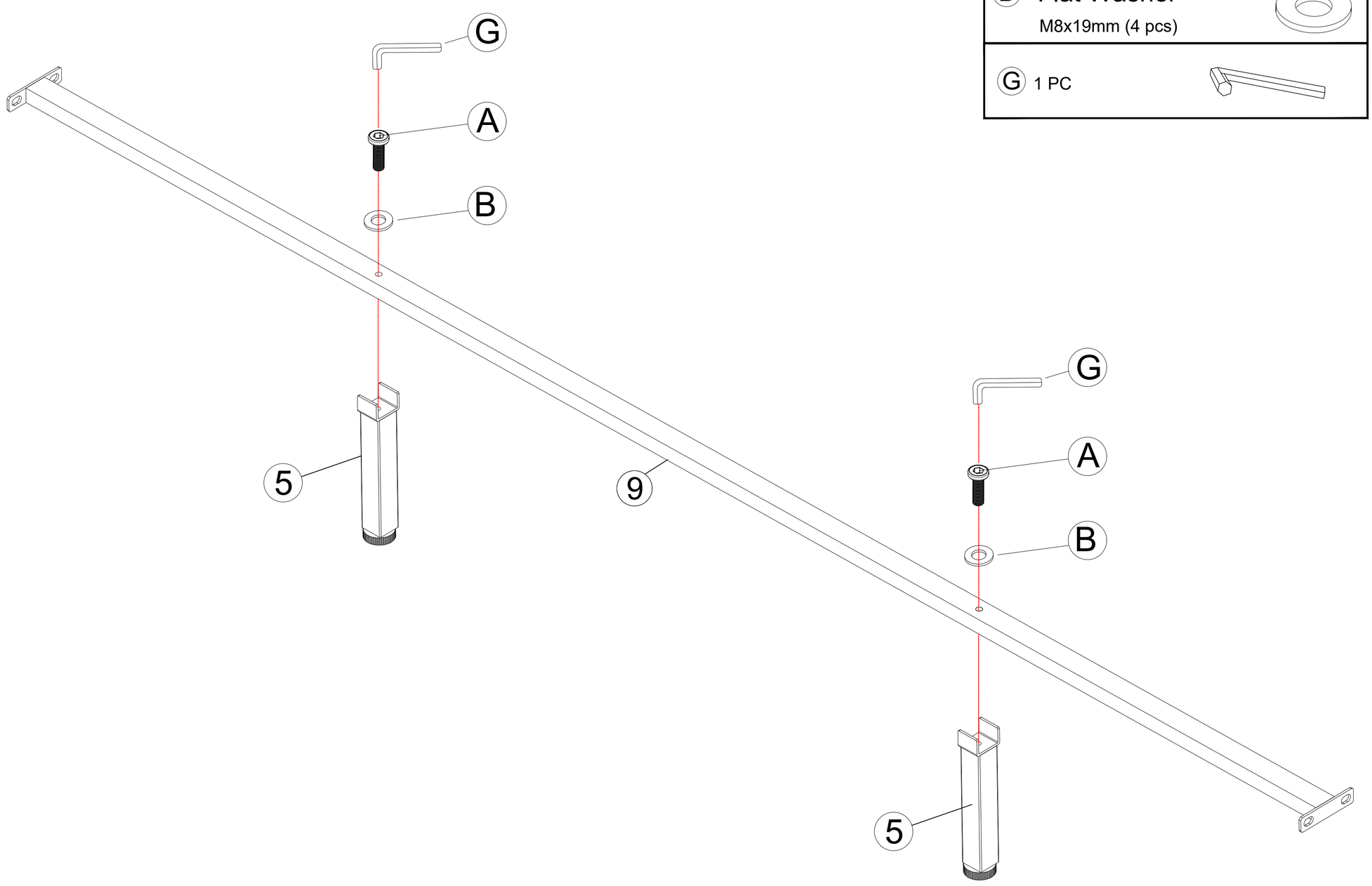


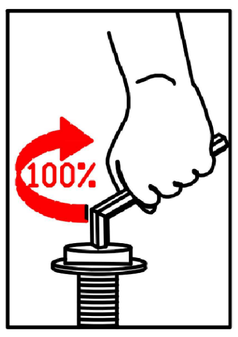


Attatch the Middle support legs (5) to the Middle crossbar (9) by using Bolt (A) and Flat Washer (B) with allen wrench (G), ensuring correct vertical alignment and screws are tightened firmly.

# Step 5 : Attatch Middle Crossbar to bed

| | |
|---|---|
| (A) -Bolt<br>M8x25mm (8 pcs) | 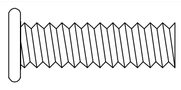 |
| (B) -Flat Washer<br>M8x19mm (8 pcs) | 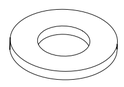 |
| (C) -Spring Washer<br>M8 (8 pcs) | |
| (G) 1 PC | 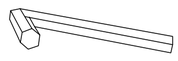 |

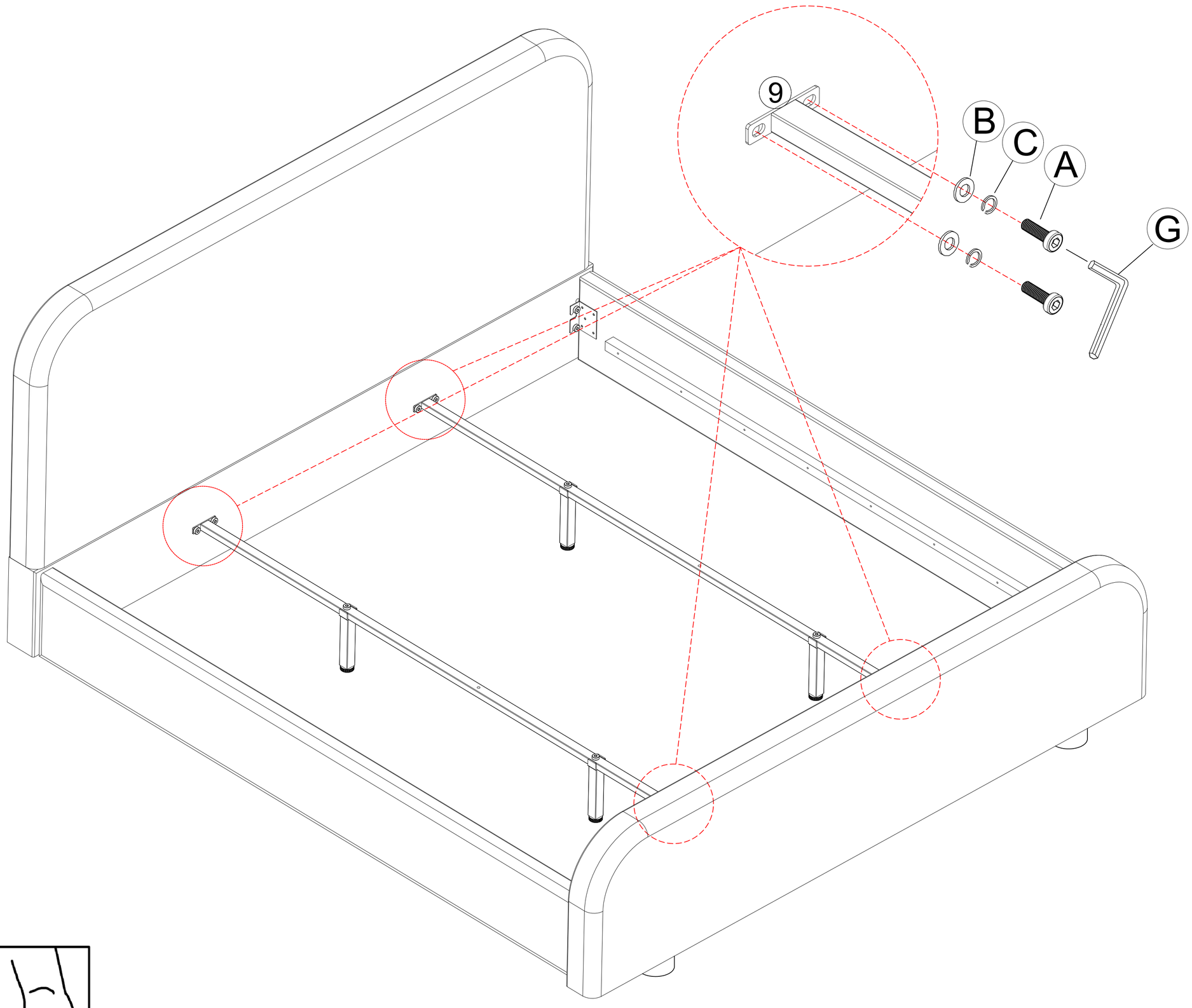


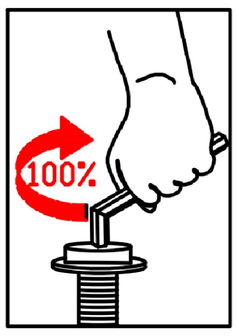


Attach middle crossbar (9) to Base Headboard (2) and Foot board (3) by using Bolt (A) , Flat Washer (B) and Spring Washer (C) with allen wrench (G). Make sure bolts are tighten.

# Step 6 : Lay the Slat to Bedframe

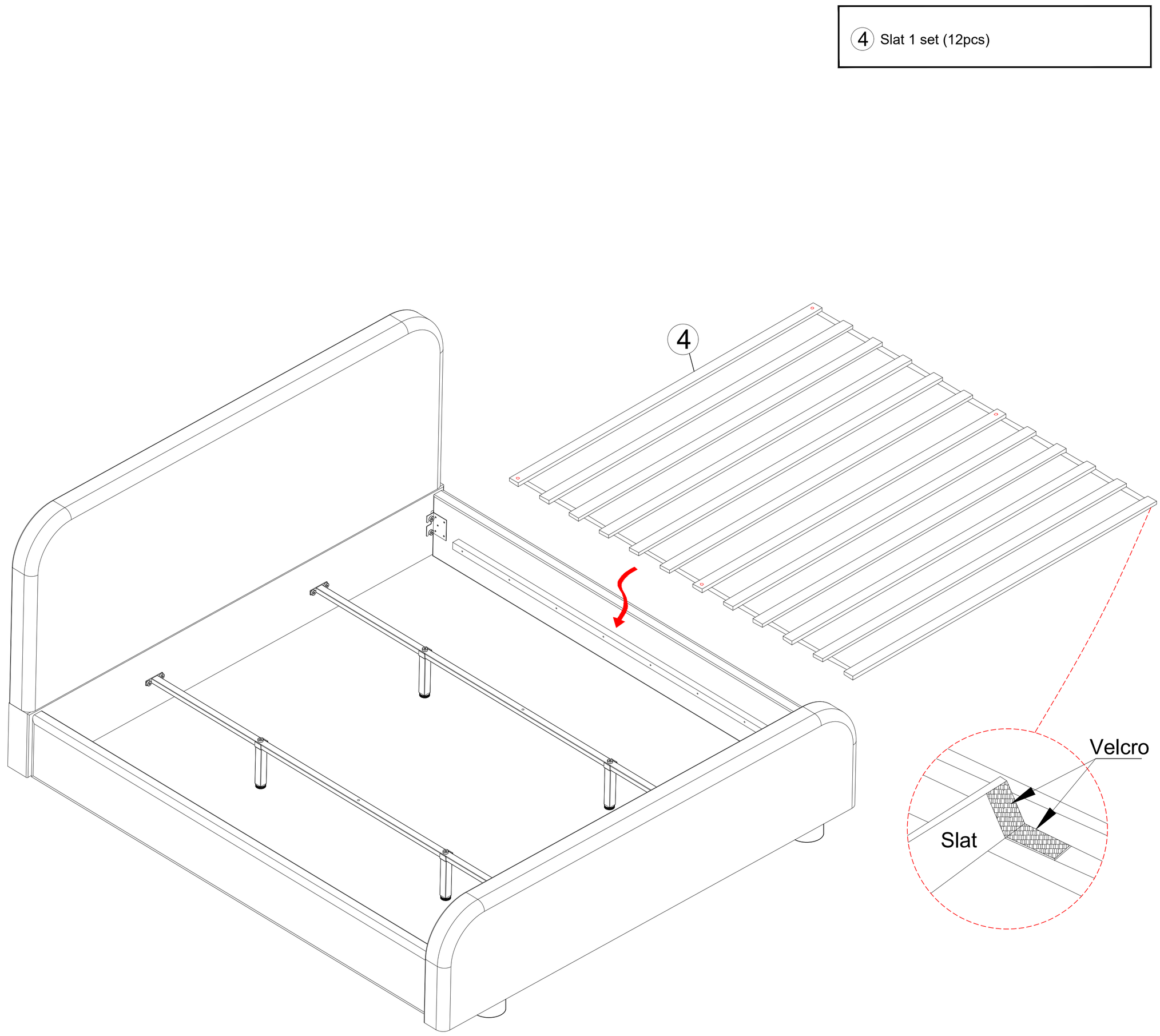


Lay the slat set into the bed frame and align it properly.

# Step 7 : Slat Assembly using screws.

| | |
|---|---|
| Ⓕ | Screws M4x25mm (6 pcs) |
| Ⓗ | Allen key (1 pc) |

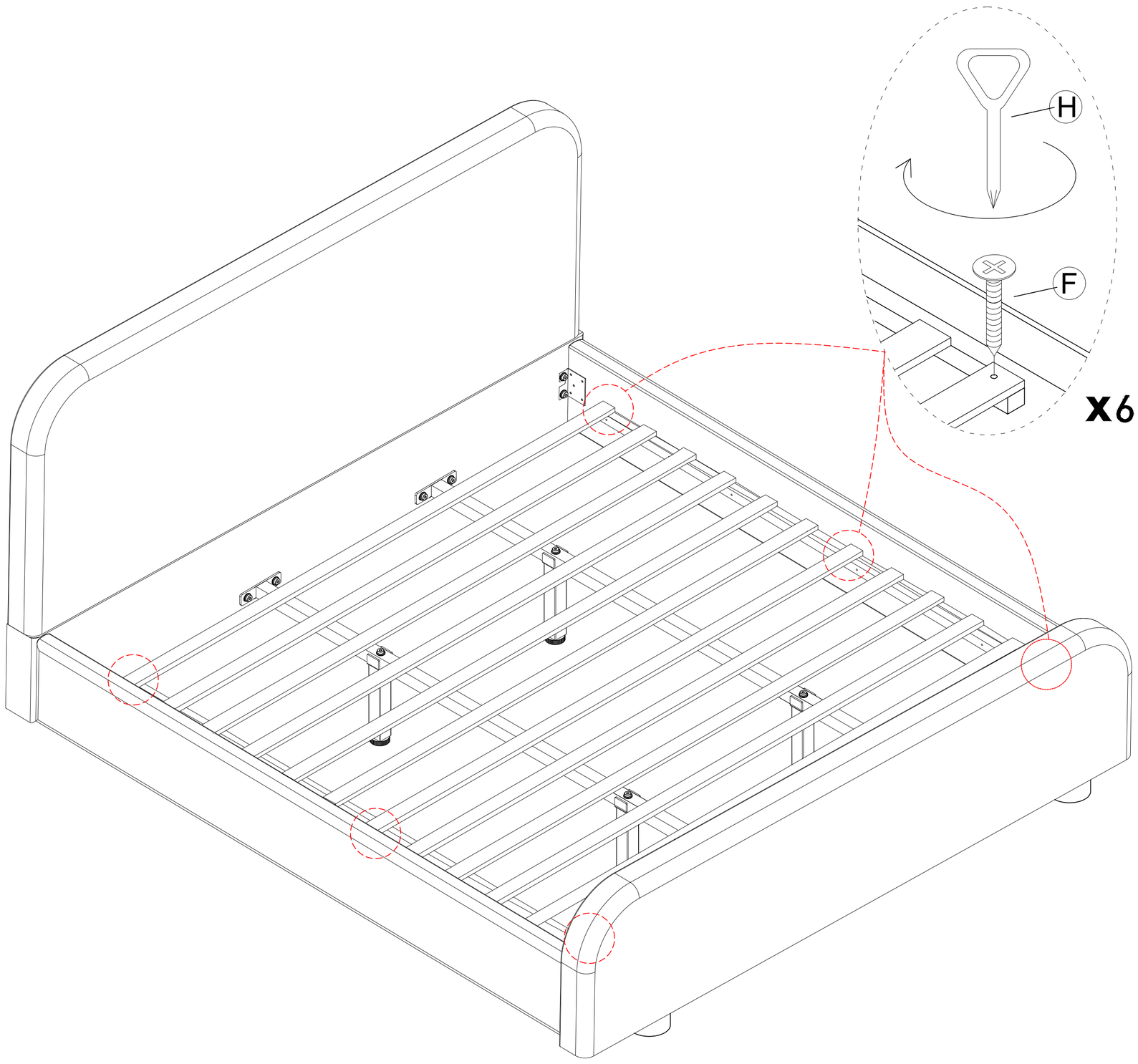


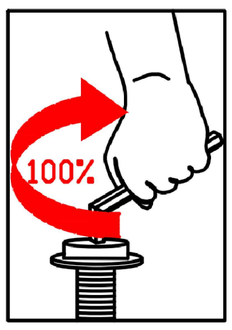


Secure all Flat noodles (4) to the rails on the side panel (8) using screws (F) and the Allen key (H).

## Step 8

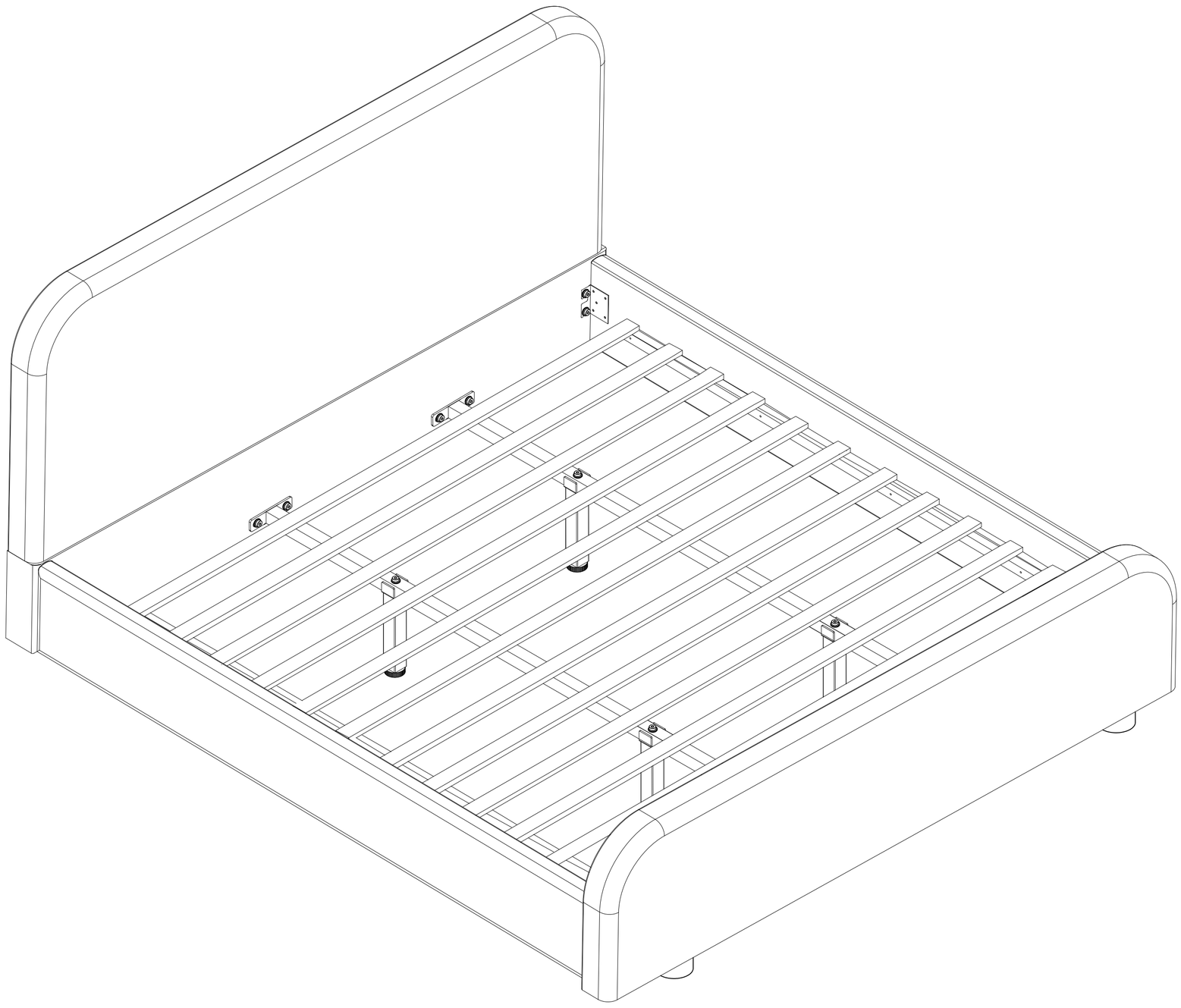

Your Bed is ready for use.
This Bed can only be used on a flat, level surface.

Place the Bed on a LEVEL SURFACE.
Inspect it and make sure all parts are adequately connected.
Don't push too hard, shake on the bed.
This would help to align all the parts at all the joint areas.
CAUTION 1: When tightenIng these screws, tighten sequentIally.
DO NOT tighten any screw fully and then towards the next one.
ThIs would cause the frame to warp.
If there is stIll wobbles, loosen the screws and execute this same process.DO NOT tIghten any screw fully and then towards the next one.
WARNING!! IF BED IS NOT STABLE,IT COULD LEAD TO DAMAGING THE PRODUCT.
Ensure all screws are fully locked into position.