Assembly Instructions

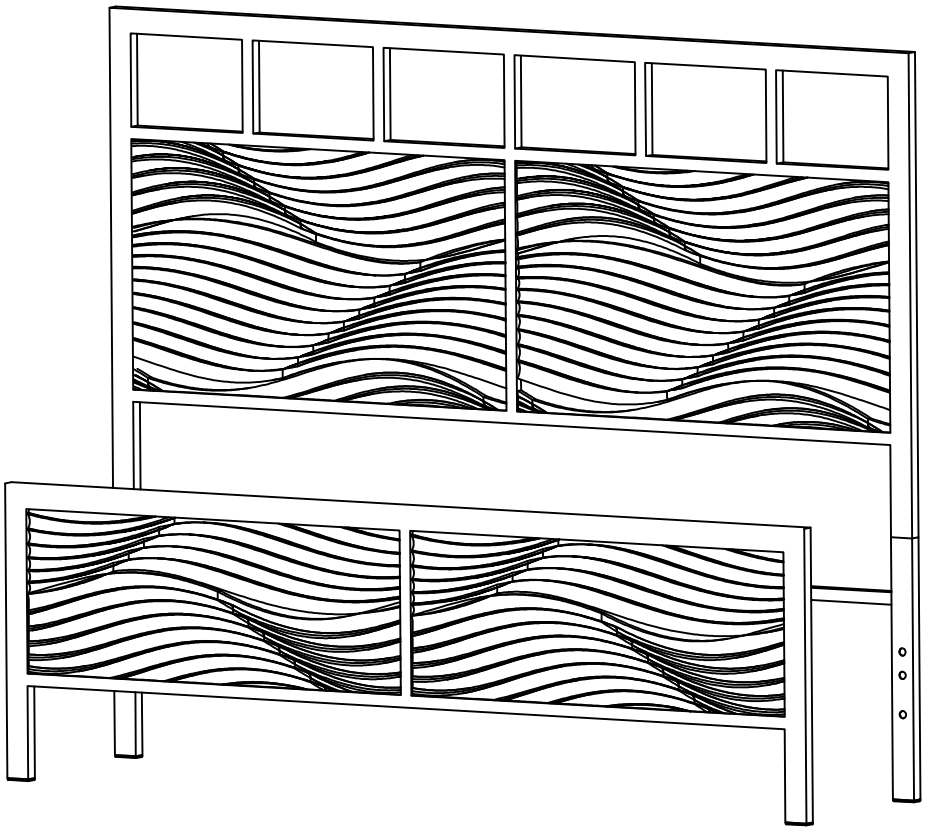

ASSEMBLY RATING

The Assembly Rating is a 5-point system that shows the degree of effort needed in assembling a specific product (with 1 being easy and 5 being difficult). For some products, two persons are recommended.

EASY DIFFICULT

Tools Required for Assembly:

Allen Wrench

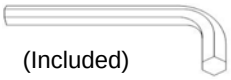

2 PERSONS RECOMMENDED

Rev.14-12-22

ASSEMBLY & CARE ADVICE

FOR YOUR FURNITURE TO LAST, CORRECT ASSEMBLY AND PROPER MAINTENANCE ARE NECESSARY.
PLEASE FOLLOW THE INFORMATION PROVIDED BELOW TO FULLY ENJOY YOUR FURNITURE.

BASIC ASSEMBLY TECHNIQUES

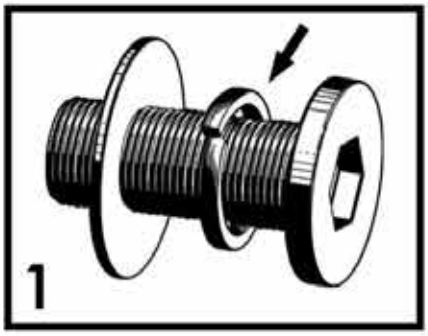

When lock or spring washer is used in an assembly, please make sure the lock or spring washer is placed between the larger flat washer and the head of the screw or bolt.

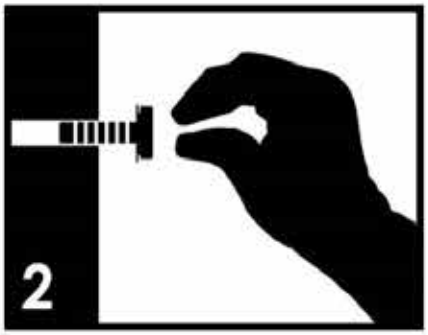

Position each part correctly and insert screws or bolts into their respective holes by hand tighten or using the proper hand tool. Only tighten when step is completed or when instructed to do so.

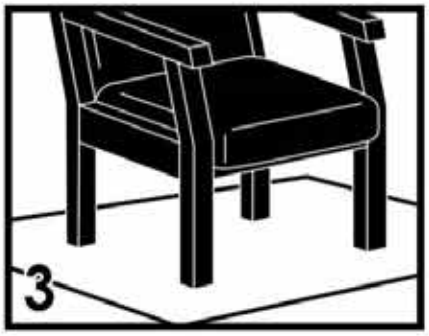

Use cardboard or carpet area when assembling furniture to prevent scratches . Make sure the furniture rests on a flat and level surface with each leg evenly touching the floor.

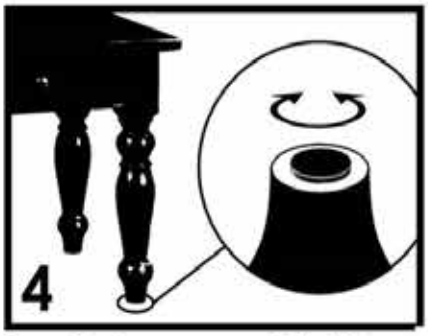

Some furniture comes with height adjustment knobs underneath each leg. To lower or to raise each leg, you need to turn clockwise or counterclockwise, respectively.

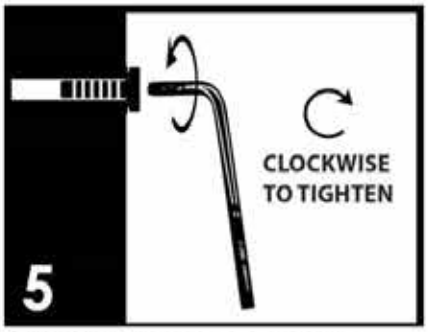

Make sure all parts are properly aligned, then use the appropriate hand tool to completely tighten the bolts or screws. Do not use power tools and do not overtighten.

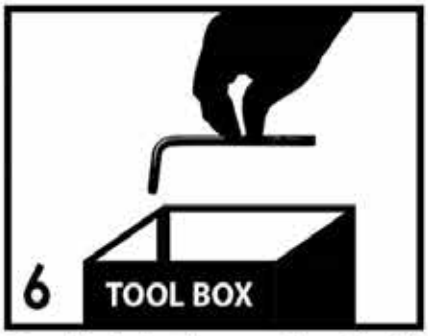

Save the instructions and store the Allen wrench or any supplied tool for later maintenance. After two weeks, check and tighten any loose hardware and repeat again every six months thereafter.

IT IS THE USER'S RESPONSIBILITY TO MAINTAIN THE FURNITURE. THE HARDWARE MAY LOOSEN OVER TIME AND MAY CAUSE THE FURNITURE TO BE WOBBLY AND UNABLE TO SUPPORT ITS INTENDED WEIGHT CAPACITY. THIS MAY LEAD TO COLLAPSE AND MAY CAUSE SERIOUS INJURY.

FAILURE TO FOLLOW THE GUIDELINES ABOVE MAY RESULT IN INJURY AND/OR PROPERTY DAMAGE.

Before you begin, please read Page 2 of “Assembly and Care Advice”.

And remember, do not tighten until each step is completed or instructed.

MD

Parts List

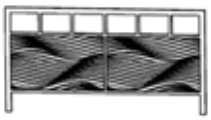

#1 x 1 pc
Headboard

#2 x 2 pcs
Headboard Leg

#3 x 1 pc
Footboard

#4 x 1 pc
H/B Leg Rail

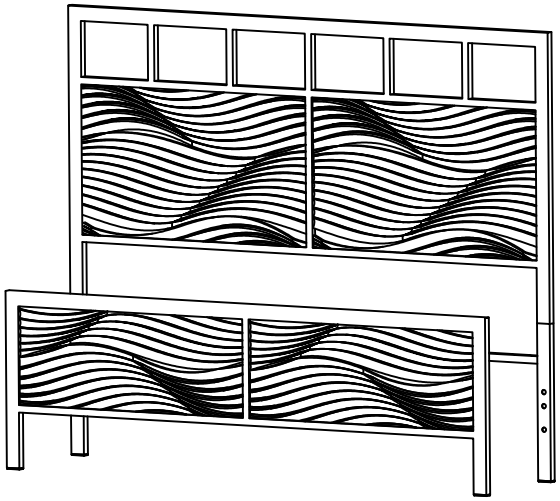

Hardware List

#A x 10 pcs
F/H Bolt 1/4”x5/8”

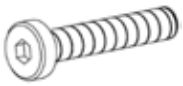

#B x 8 pcs
Bolt 1/4”x7/8”

#C x 8 pcs
Plastic Washer

#D x 8 pcs
Flat Washer

#E x 8 pcs
Lock Washer

#F x 1 pc
Allen Wrench

#G x 2 pcs
Bracket

Due to the size and/or weight of this product, it is highly recommended that the assembly should be done near the area of its intended location. Make sure you have enough space to move around during the assembly. ALWAYS have at least two people to help with transporting and assembling the product to avoid any potential injury and/or damage.

I. Align the 2 headboard legs (#2) with the pre-drilled holes on the headboard (#1). Then align the 2 brackets (#G) with the headboard (#1) and the headboard legs (#2).

II. Insert 8 flat-head bolts (#A) through the brackets (#G) using the Allen wrench (#F) to lock them with the headboard (#1) and the legs (#2).

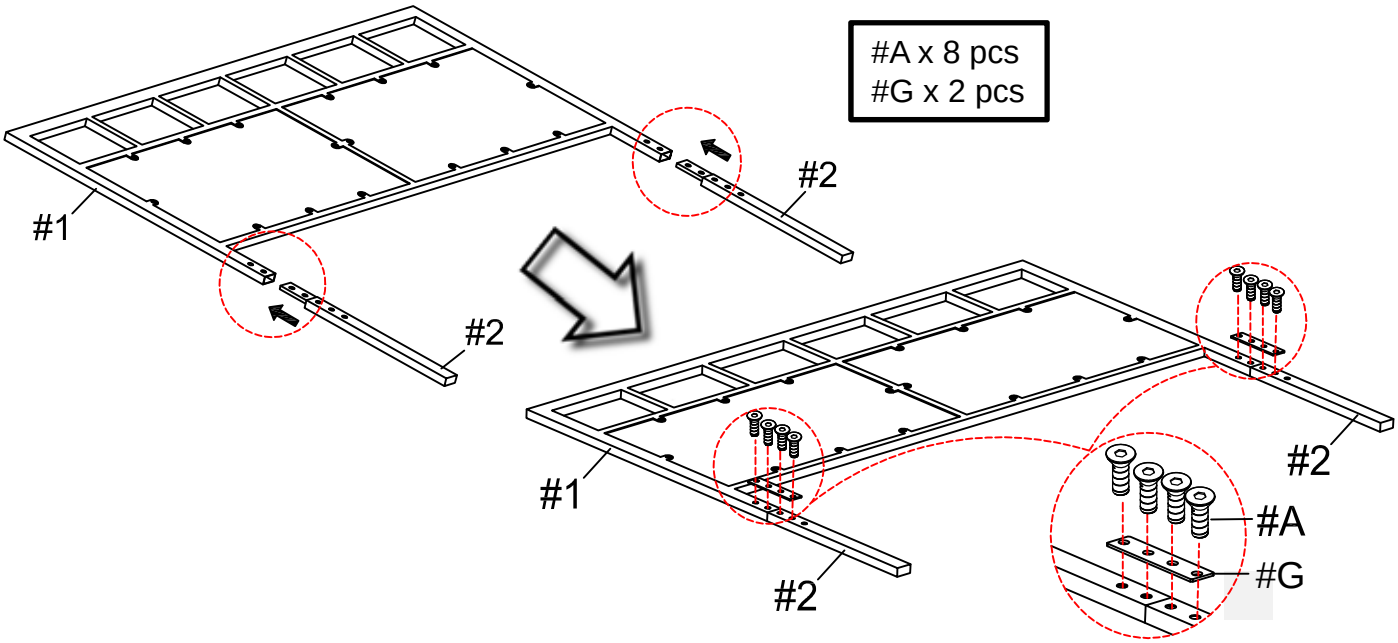

Turn right (clockclockwise) to tighten

I. Align the headboard leg rail (#4) with the pre-drilled holes on the 2 headboard legs (#2).

II. Insert 2 flat-head bolts (#A) through the headboard leg rail (#4) using the Allen wrench (#F) to lock them with the headboard legs (#2).

Turn right (clockwise) to tighten

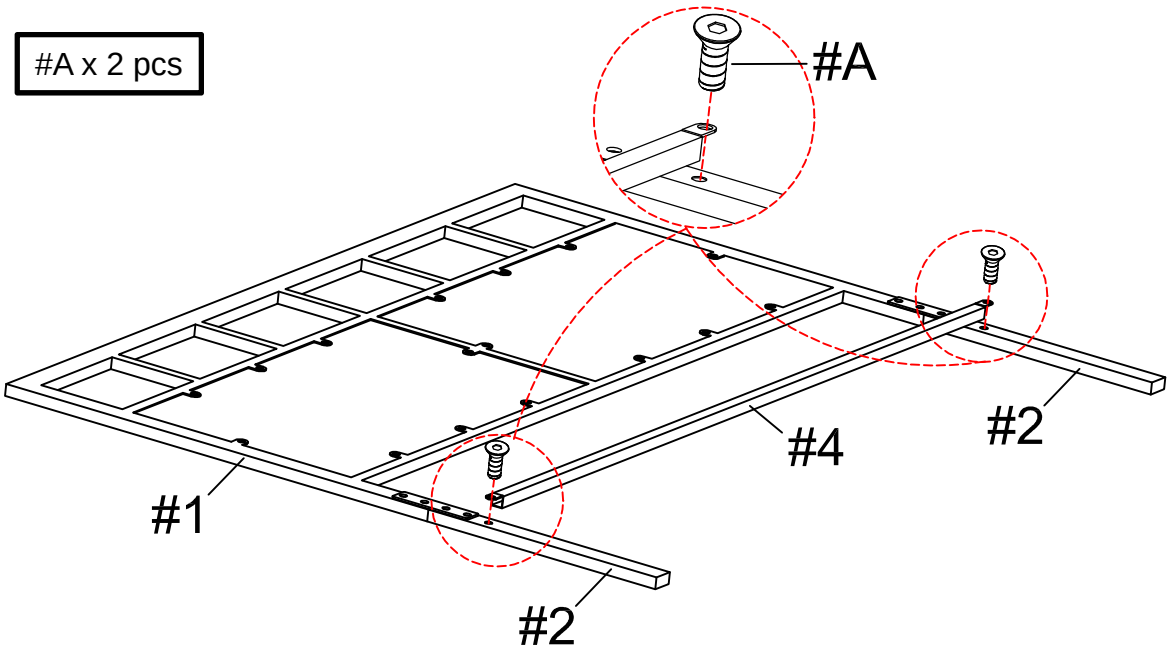

ASSEMBLING THE BED FRAME TO THE HEADBOARD/FOOTBOARD

This is an optional step to assemble the headboard/footboard onto the bed frame (sold separately).

I. Align the holes of the bed frame with the holes on the headboard legs (#2) of the assembled headboard.

II. Prepare 4 bolt assemblies by inserting FIRST the lock washer (#E) onto the bolt (#B) and then the flat washer (#D) onto the SAME bolt (#B), in that order.

III. Insert the bolt assemblies through the bed frame, then insert 4 plastic washers (#C) onto the same bolts (#B) and secure those bolts using the Allen wrench (#F) to lock them in with the headboard legs (#2).

IV. Repeat the process above to assemble the other ends of the bed frame onto the footboard (#3).

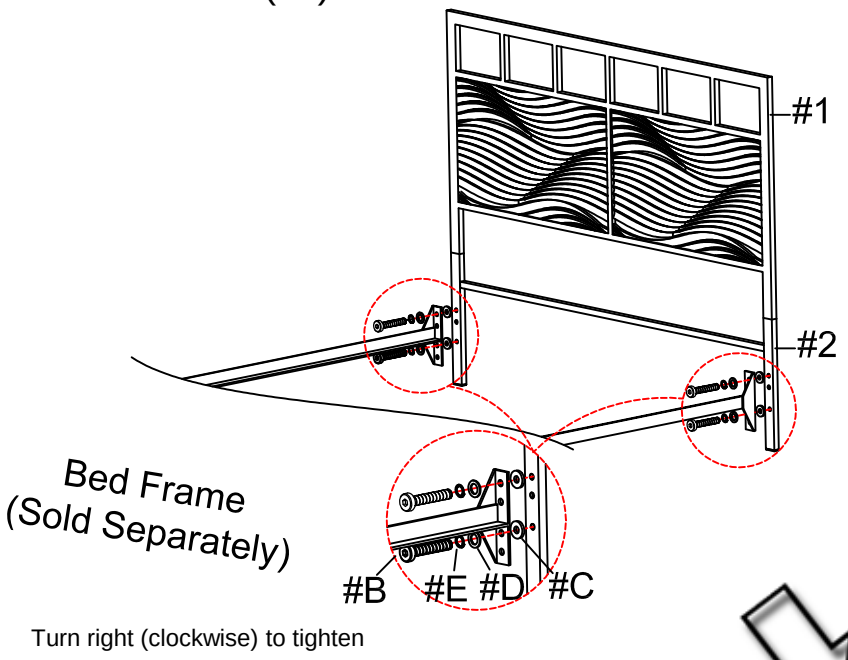

#B x 8 pcs
#C x 8 pcs
#D x 8 pcs
#E x 8 pcs

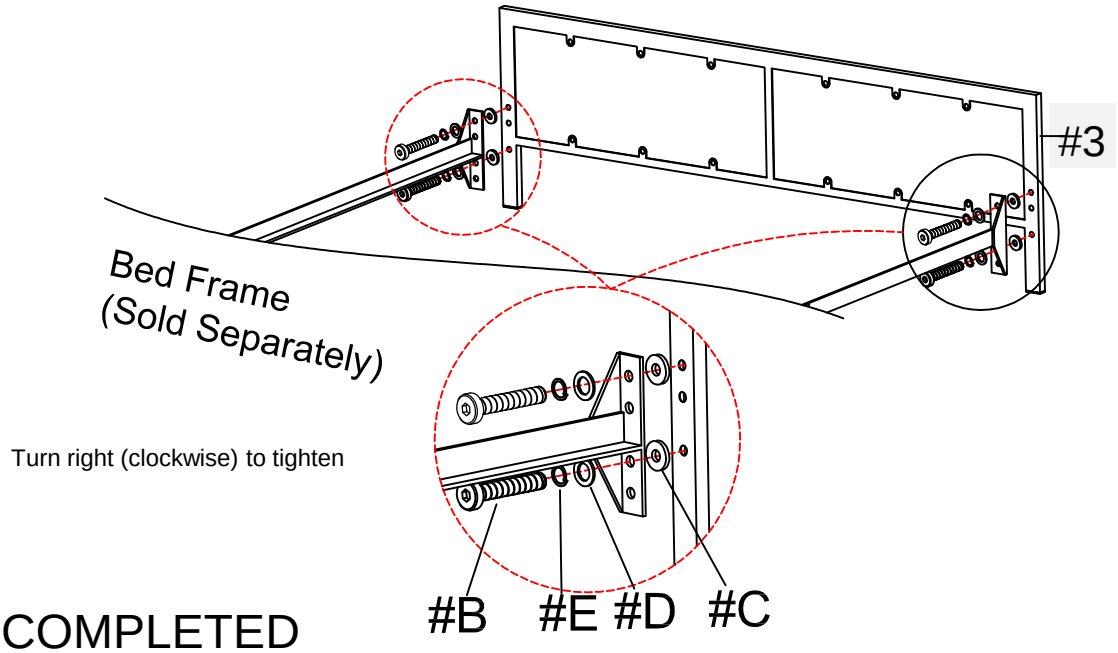

ASSEMBLY IS COMPLETED