Dining Chair

Please keep for future reference

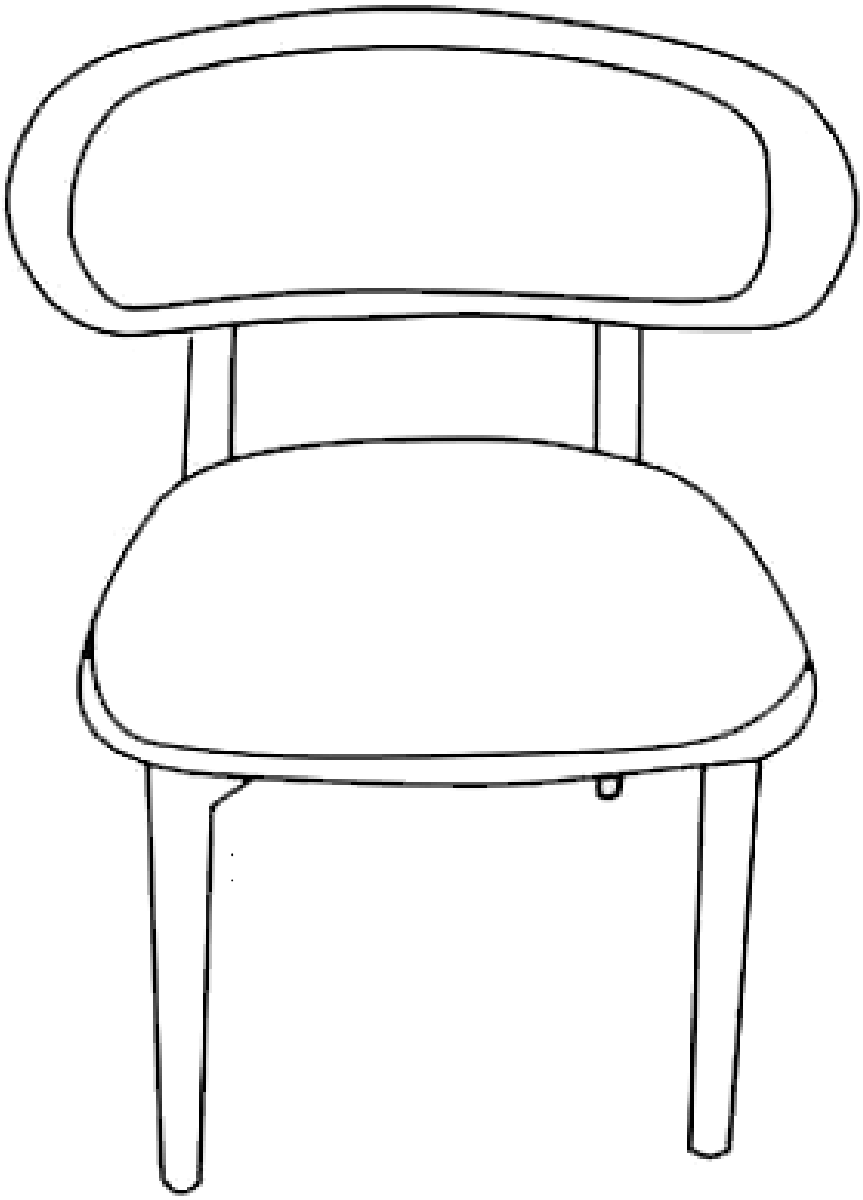

Important – Please read these instructions fully before starting assembly

Safety and Care Advice

Important – Please read these instructions fully before starting assembly

• Check you have all parts a nd hardware using the list be low.

• Remove all parts from bags and group by type.

• Keep children and pets aw ay – small parts may cause choking.

• Assemble on a soft, level su rface to avoid damaging the c hair or your floor.

• Do not stand or put weight on the product during assem bly.

• Assemble as close as poss ible to the final position.

• Two people are recommen ded for easier assembly.

• Do not fully tighten any bol ts until the entire assembly i s complete.

• If using a power d rill, set to low torqu e to avoid damage.

Care and maintenance

• Only clean using a damp cl oth and mild detergent, do no use bleach or abrasive clean ers.

• Check screws and bolts ev ery 3 months – retighten if loose.

• Keep away from direct sunlig ht and high humidity.

Handy Hints

• Assemble all parts and bolts loosely during assembly, only once the product is complete should you fully tighten the bolts

• Regularly check and ensure That all bolts and fittings are tightened properly.

WARNING
In order to help prevent overturning – please follow these instructions

To help prevent product toppling over please follow the below steps:-

Use the anti tip stap or wall fixing method provided (if applicable)
Do not allow children to climb or hang on the furniture
Do not open more than one drawer at a time
Do not place heavy items in the top drawers
Do not place heavy items on top of the furniture, unless the furniture has been designed for this purpose

Components-Fittings

Please check you have all the panels listed below

Note:The quantitie below are the correcet amount to complete the assembly.In some cases more fittings may be supplied than are required.

Item no	PARTS LIST	Qty
Ⓐ	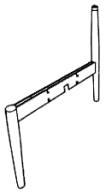	X1
Ⓑ	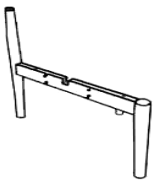	X1
Ⓒ	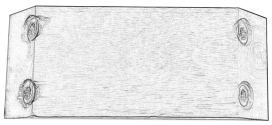	X2
Ⓓ		X1
Ⓔ		X1

Item no	HARDWARE LIST	Qty
①		X10
②		X2
③	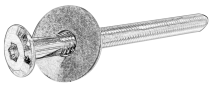	X4
④		X1
⑤		X8
⑥		X4
⑦		X1

Spare parts		X1		X2

Place all Parts on aclean and flat surface

Step 1

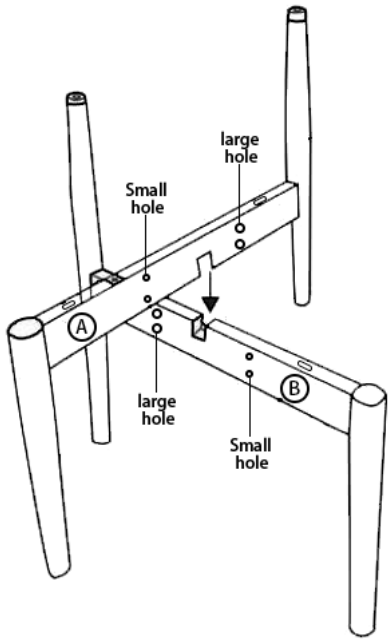

Step 2

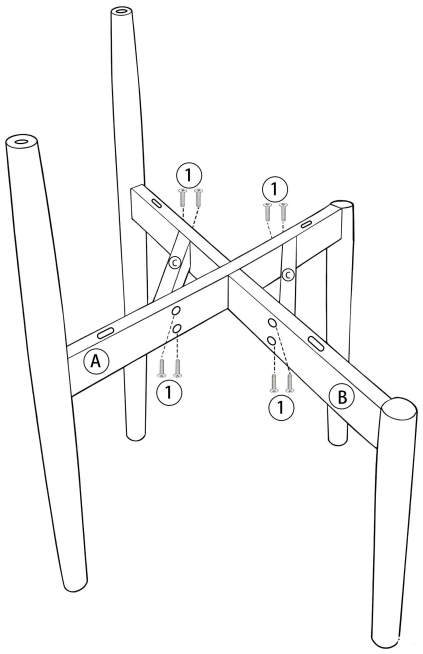

Step 3

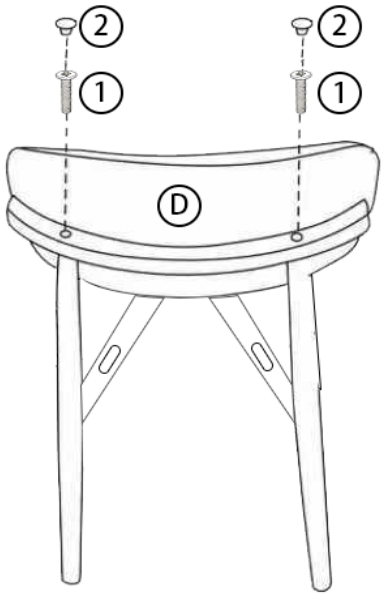

Step 4

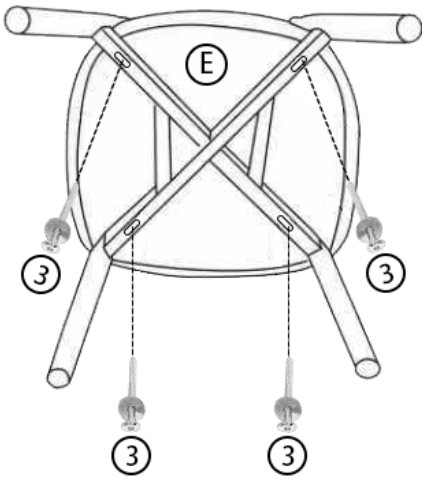

Step 5

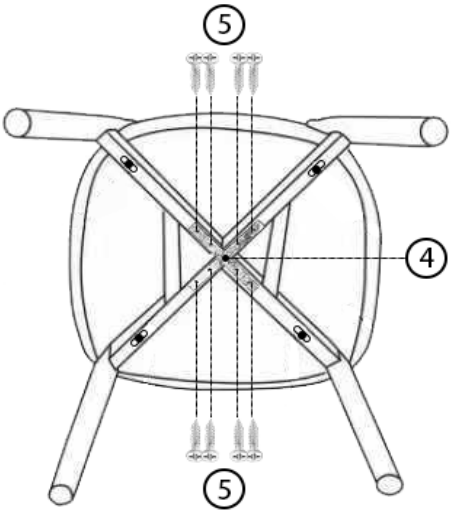

Step 6

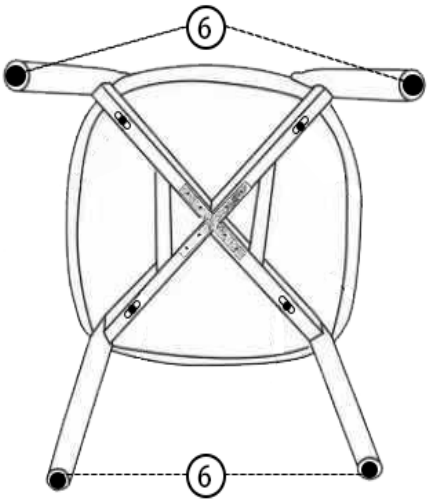
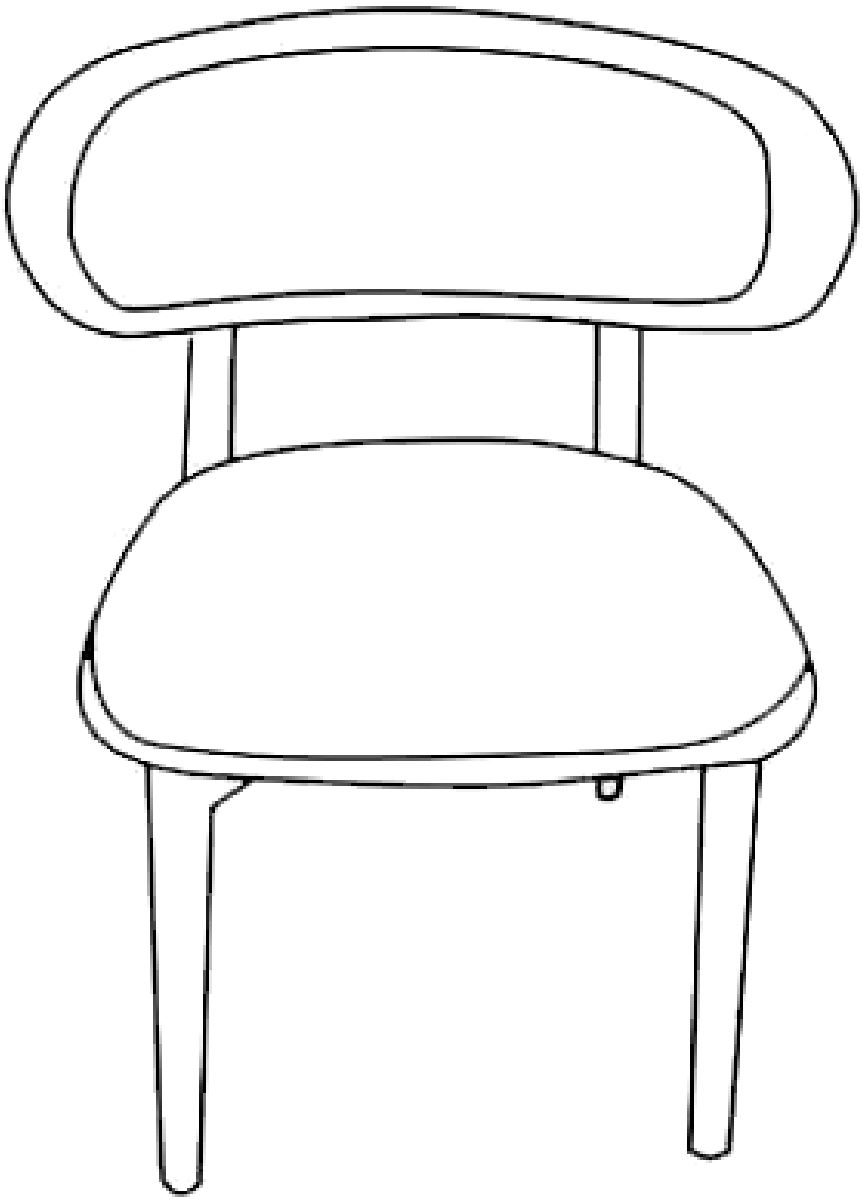
Installlation Finished