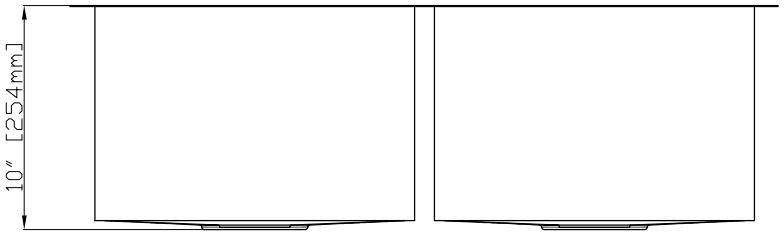
10″ [254mm]

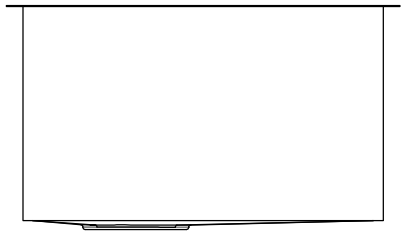

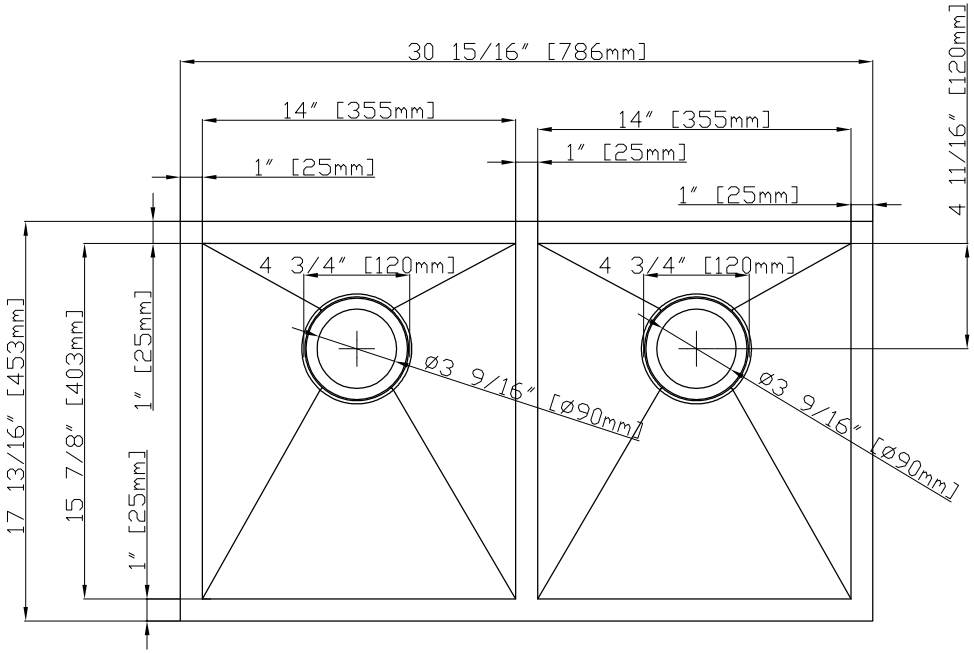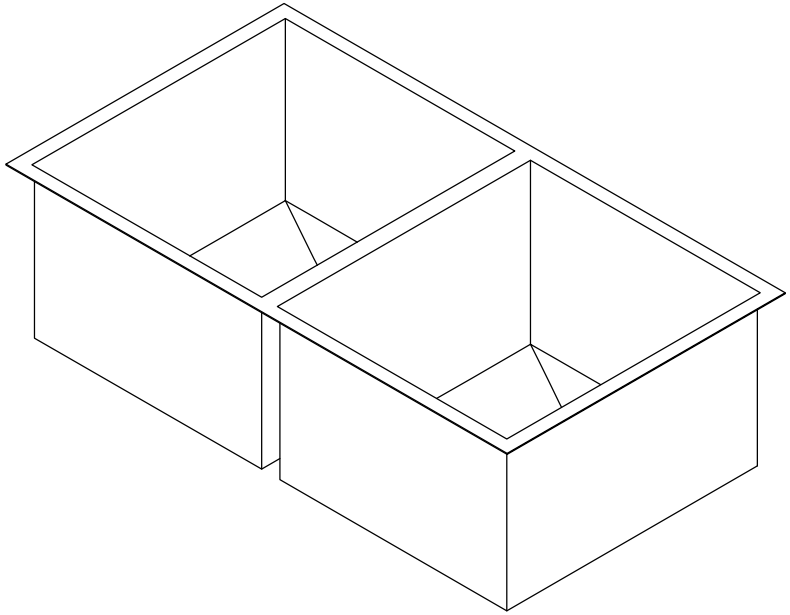
30 15/16″ [786mm]
14″ [355mm]
14″ [355mm]
1″ [25mm]
1″ [25mm]
1″ [25mm]
4 11/16″ [120mm]
4 3/4″ [120mm]
4 3/4″ [120mm]
ø3 9/16″ [ø90mm]
ø3 9/16″ [ø90mm]
17 13/16″ [453mm]
15 7/8″ [403mm]
1″ [25mm]
1″ [25mm]