ASSEMBLY INSTRUCTIONS

Fine Furniture for every stage of life

Dining Table

REVISION 0 : 05/20/2025

ASSEMBLY INSTRUCTIONS

ASSEMBLY TIPS:

1. Remove hardware from box and sort by size.
2. Please check to see that all hardware and parts are present prior to start of assembly.
3. Please follow attached instructions in the same sequence as numbered to assure fast & easy assembly.

WARNING!

1. Don't attempt to repair or modify parts that are broken or defective. Please contact the store immediately.
2. This product is for home use only and not intended for commercial establishments.

ASSEMBLY TIME	10 MINUTES

PARTS IDENTIFICATION

A	TOP	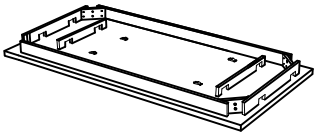	1PC
B	LEG		4PCS
C	LEAF	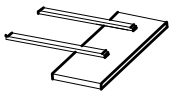	2PCS

HARDWARE IDENTIFICATION

1	**BOLT** **(M8 x 70mm - BLK)**	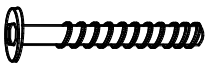	8PCS
2	**LOCK WASHER** **(M8 - BLK)**		8PCS
3	**FLAT WASHER** **(M8 - BLK)**		8PCS
4	**ALLEN WRENCH** **(M5 x 65MM - BLK)**		1PC
5	**METAL PLATE** **3.5 (2 HOLE)**	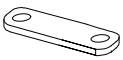	4PCS
6	**PAN HEAD SCREW** **(M3.5 x 16mm - BLK)**	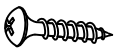	8PCS

NOTE:

Philips head screw driver is required in the assembly process; however,manufacture does not provide this item.

ASSEMBLY INSTRUCTIONS

STEP 1

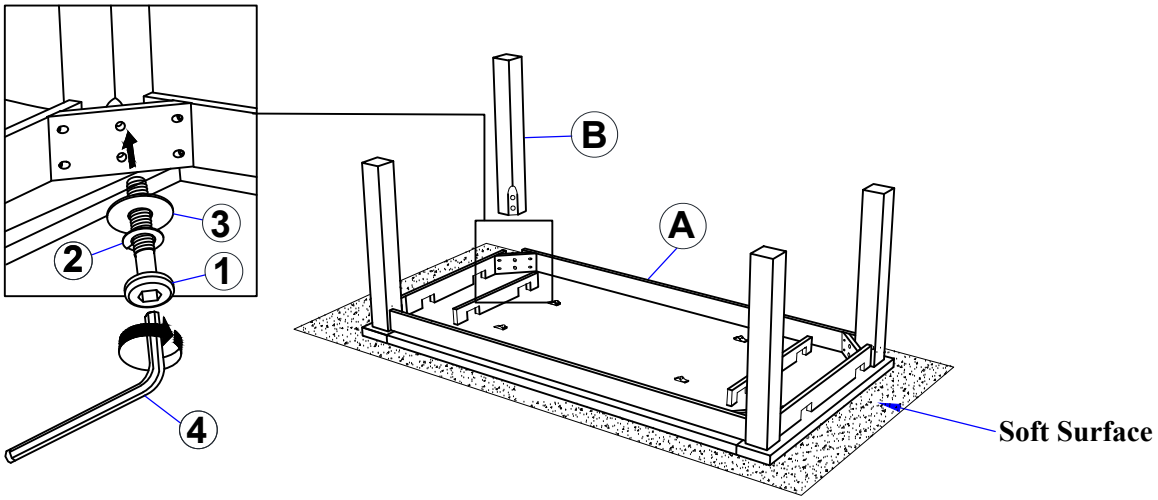

STEP 2

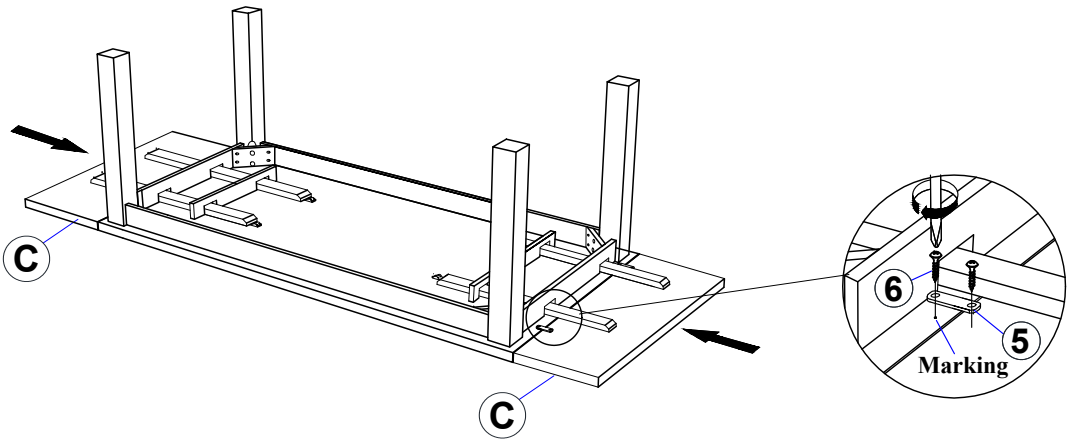

STEP 3

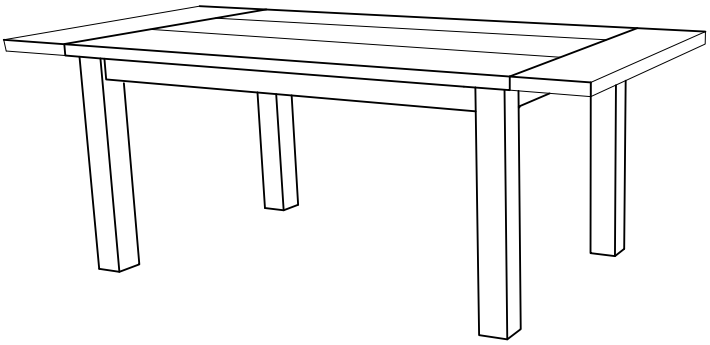

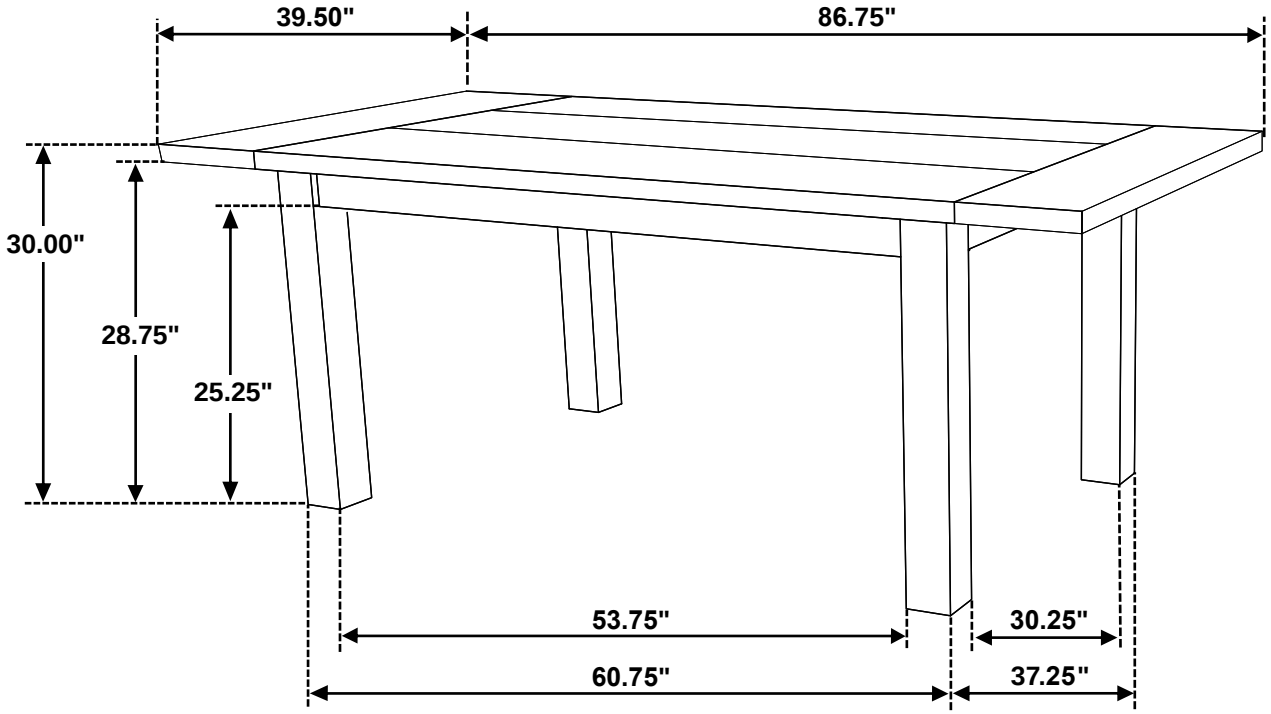

Note : Dimension tolerance ± 5%