INSTALLATION
Product Manual

Version: 740011US-01-26A-PF

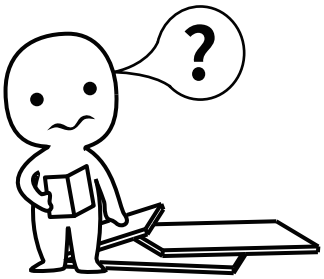

IMPORTANT INFORMATION!

please read the entire manual before starting to assemble and/or using this product.follow the manual thoroughly and keep it for further reference.

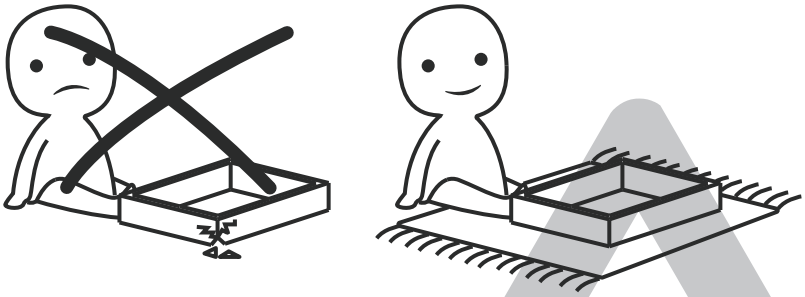

AVOID SCRATCHES!

In order to avoid scratching this furnuture should be assembled on a soft layer-could be a rug.

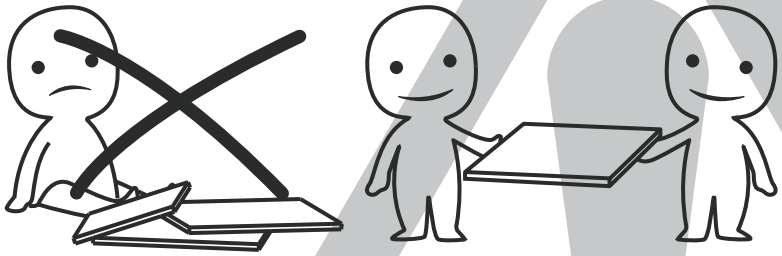

IMPROVE EFFICIENCY !

Try to find a partner to install with you, which can speed up the installation efficiency and shorten the time.

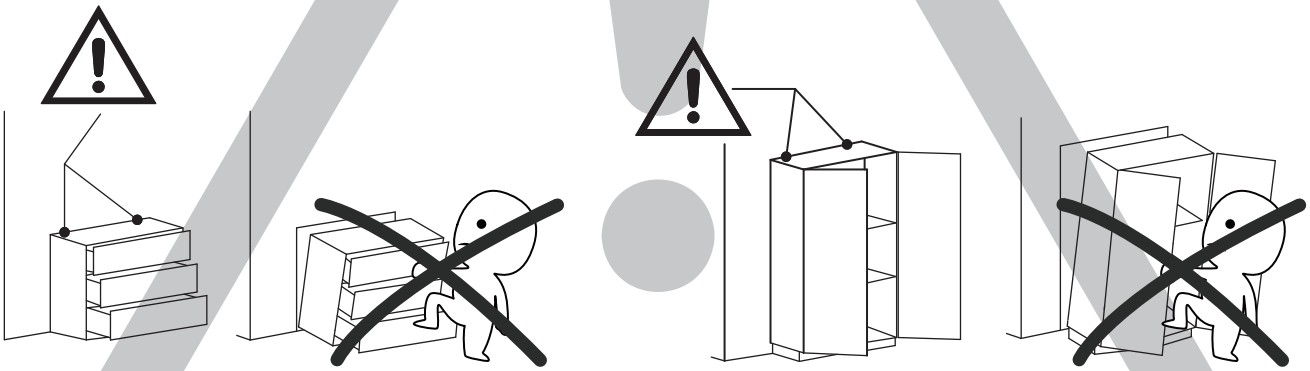

ANTI-TOPPLE WARNING !

Overturned furniture can cause serious or fatal crush injuries. To prevent tipping over, be sure to use the wall attachment, if not included with this product. Please purchase the wall attachment that fit your wall. If unsure, seek professional advice. Please read and follow each step of the instructions carefully.

IMPORTANT !

It is important that any product which is assembled using any kind of screw is re-tightened 2 weeks after assembly,and once every 3 months - in order to assure stability through-out the lifespan of the product.

For regular maintenance and cleaning of the product, for the frame, please use a rag dipped in neutral detergent to fully wipe it, and then dry it with a clean rag.For glass materials, wipe with a rag dampened with water glass cleaner, and then dry with a dry rag.

Do not use an electric screwdriver, and do not use too much force when installing, because the board is easy to break.

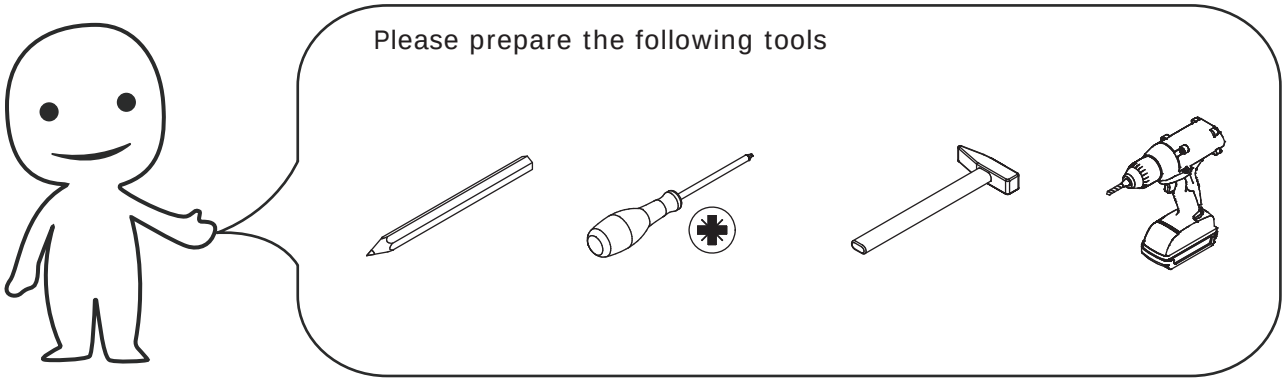



When installing, please carefully confirm whether each screw corresponds to the manual, accessories with similar shapes can be distinguished by size

A x 60	B x 60	C x 8	D x 12	E x 116
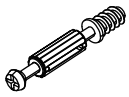 M5 x 42 mm	 ∅15 x 10 mm	 M5 x 40 mm	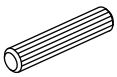 ∅6 x 40 mm	 M3.5 x 14 mm
F x 6	**G x 12**	**H x 4**	**I x 4**	**J x 4**
 111 x 96 mm	 M4 x 20 mm	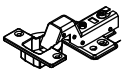 DW	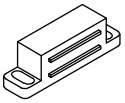	 ∅4 x 63 mm
K x 8	**L x 36**	**M x 14**	**N x 8**	**O x 10**
 M3 x 14 mm	 M3.5 x 14 mm	 M6 x 35 mm	 ∅6 mm	 L60 x K48 mm
P x 2	**Q x 25**	**R x 25**	**S x 2**	**x 1**
∅8 x 60 mm  ∅5 x 55 mm	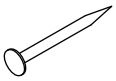 ∅1.5 x 15 mm	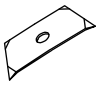 ∅15 x 10 mm	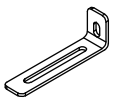	 #4

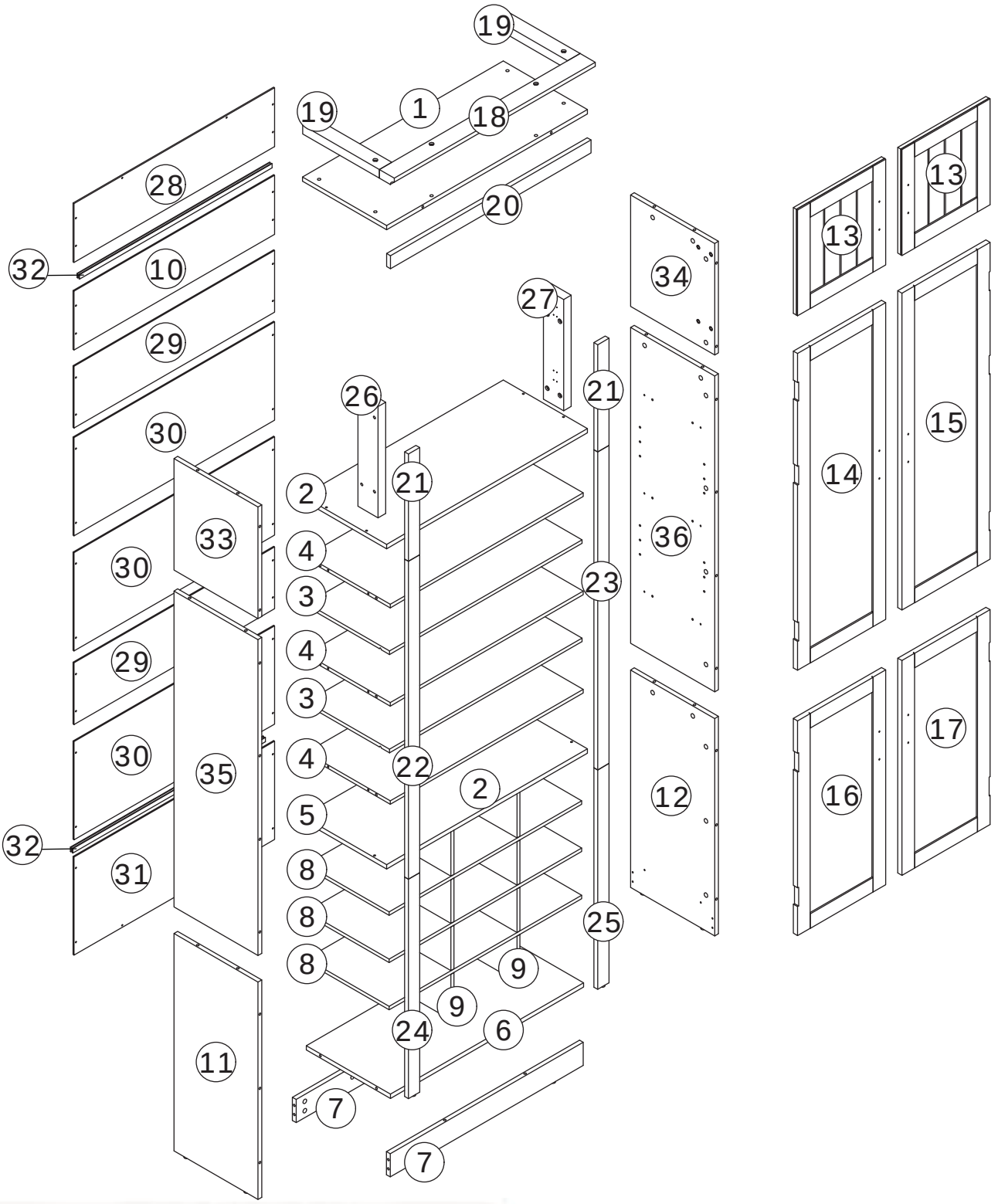

⚠WARNING





Children have died from furniture tipover.To reduce the risk of furniture tipover:

- ALWAYS install Anti-tip device provided.
- NEVER put a TV on this product.
- NEVER allow children to stand,climb or hang on drawers,doors,or shelves.
- NEVER open more than one drawer at a time.
- Place heaviest items in the lowest drawers.

This is a permanent label.
Do not remove!

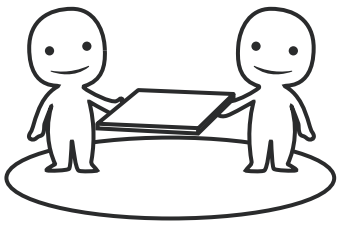

ASSEMBLED BY 2 ADULTS

1

A x 4

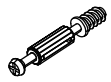

M5 x 42 mm

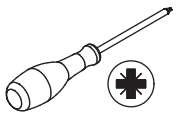

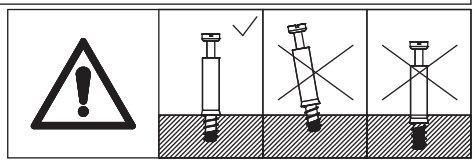

Screw eccentric rod (A) onto Part 1.

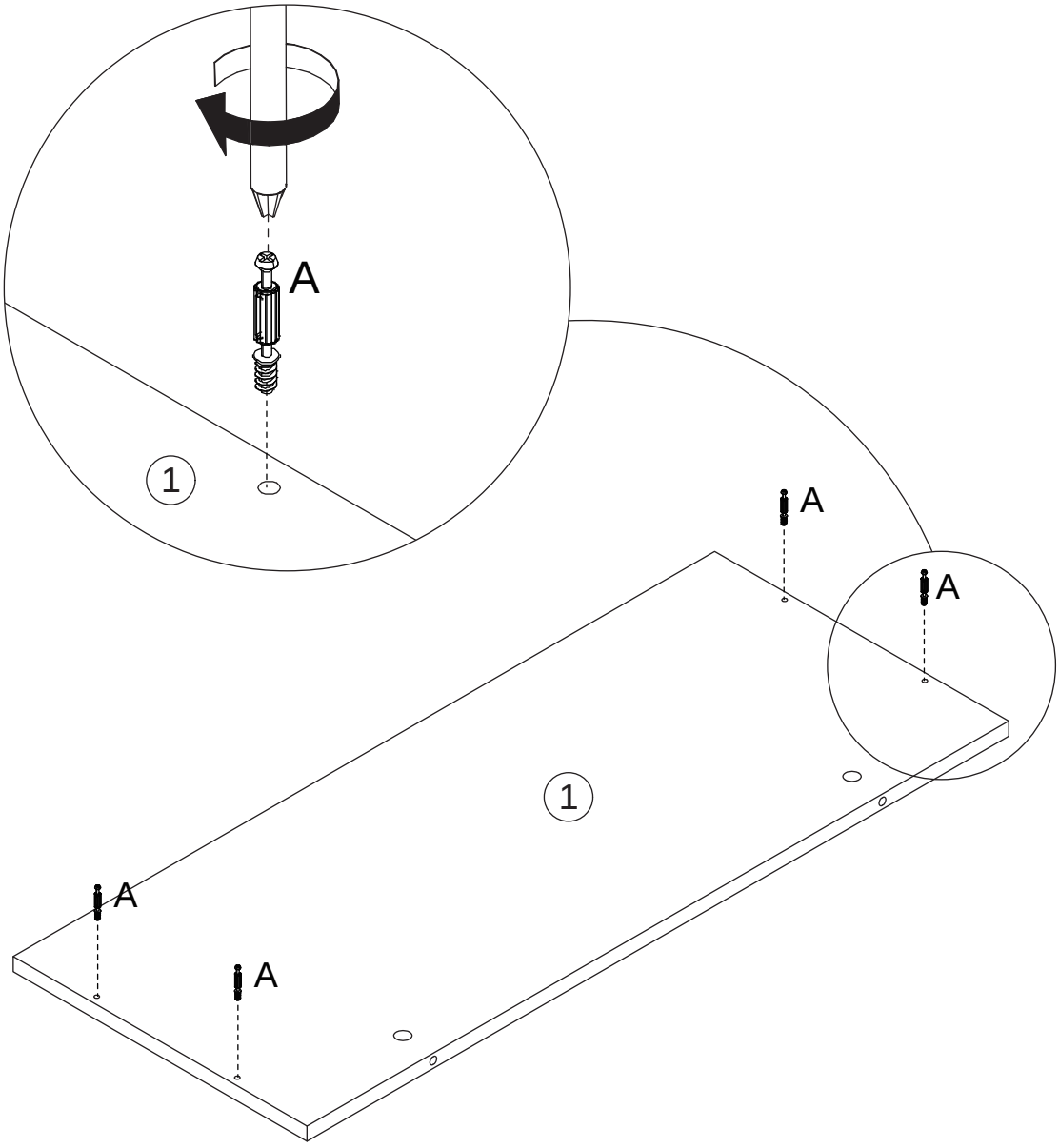

2

B x 4



∅15 x 10 mm

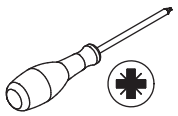

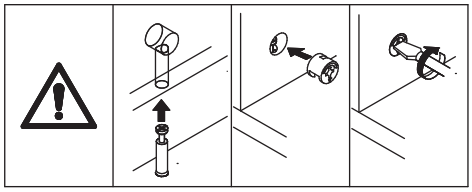

Connect Part 33 and 34 to Part 1, then tighten by turning eccentric wheel (B) clockwise.

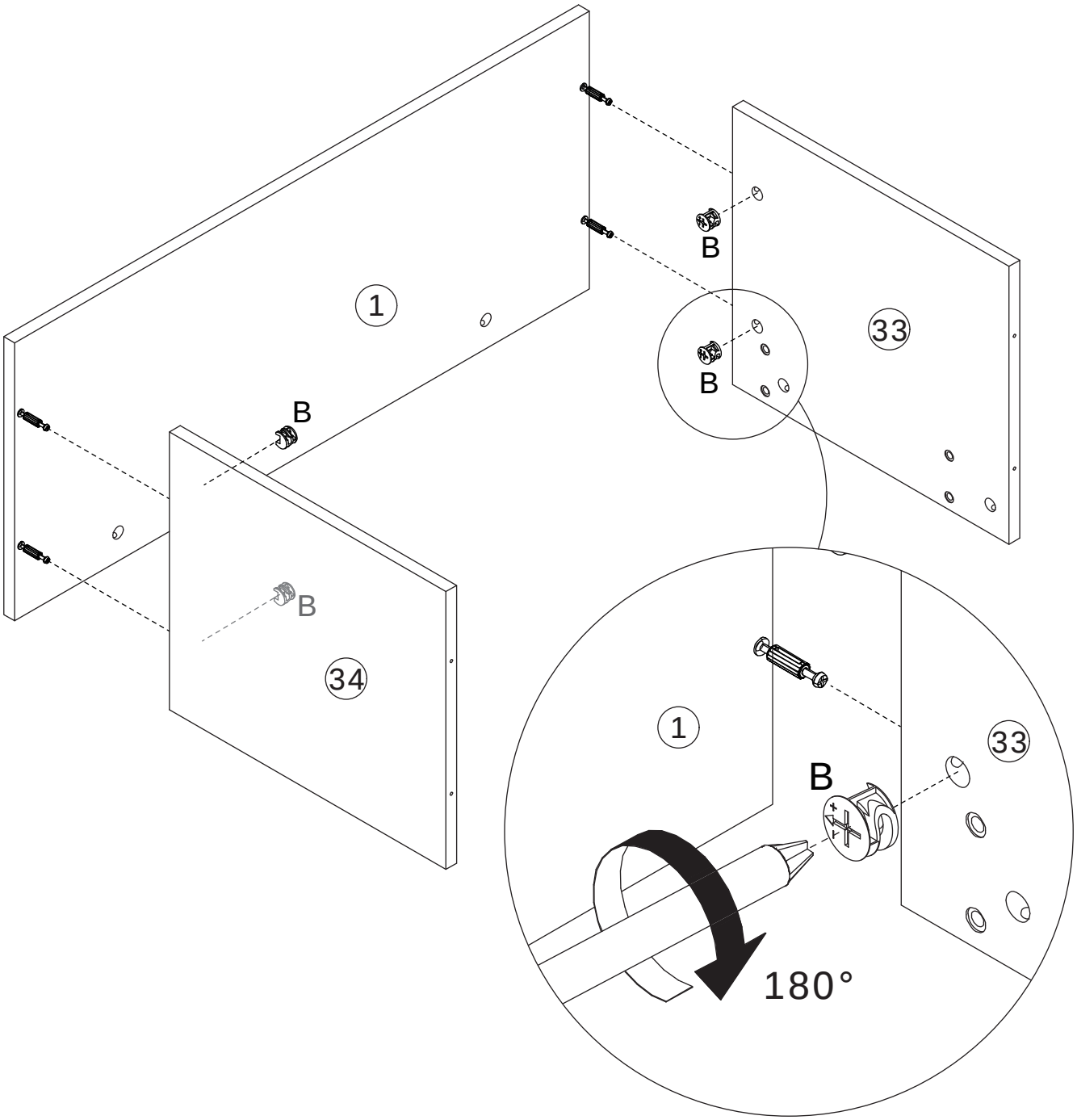

3

A x 4

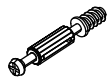

M5 x 42 mm

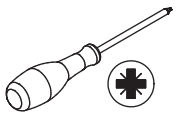

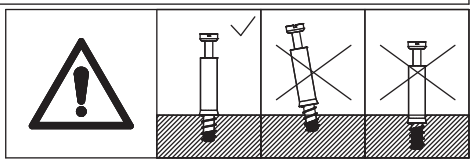

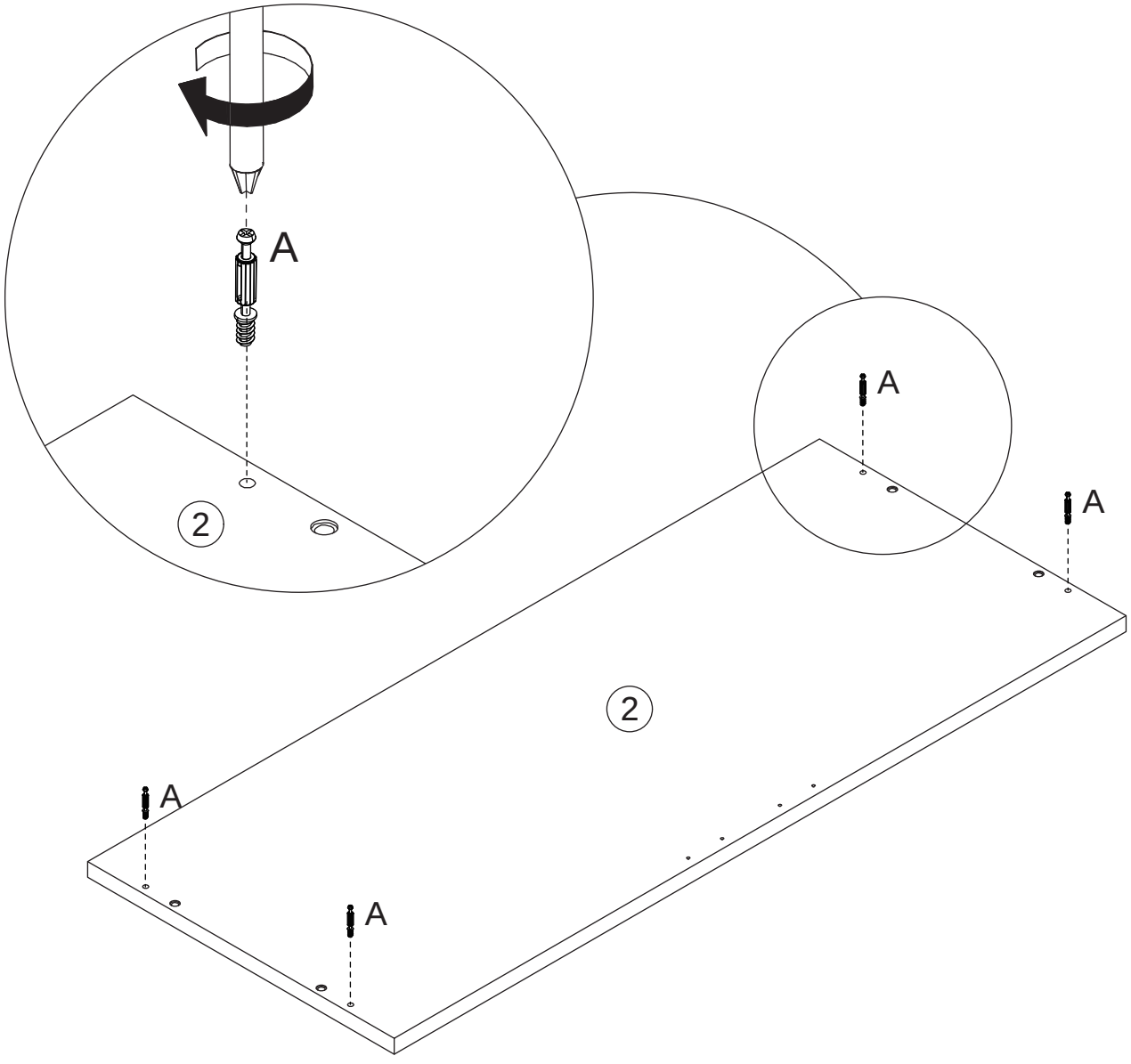

Screw eccentric rod (A) onto Part 2.

4

C x 4



M5 x 40 mm

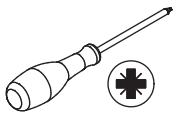

Connect Part 33 and 34 to Part 2, and secure them using screw (C).

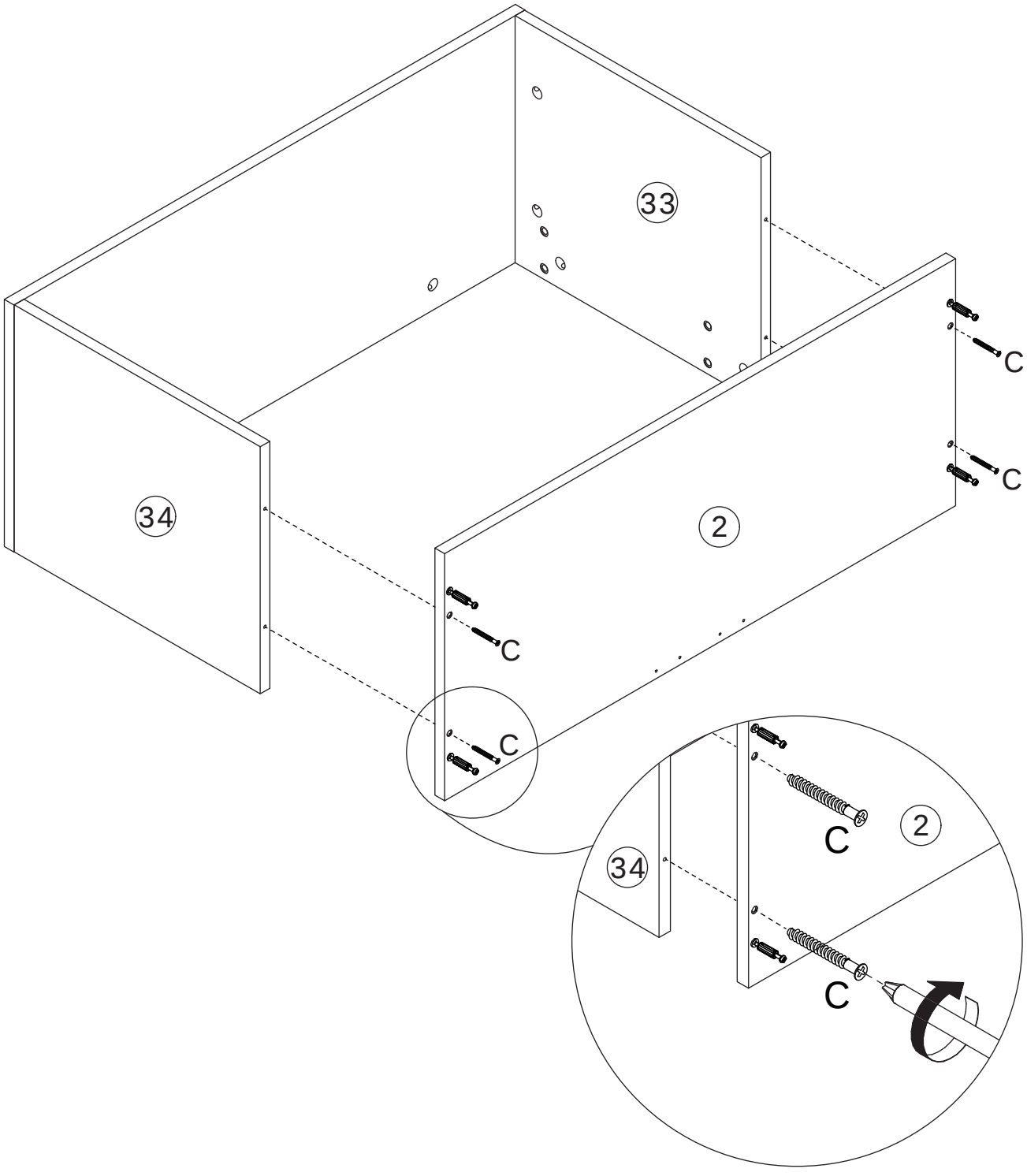

5

A x 12

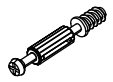

M5 x 42 mm

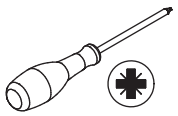

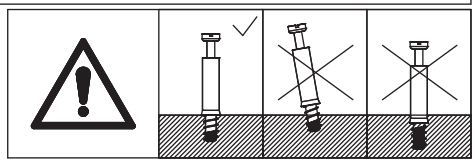

Screw eccentric rod (A) onto Part 35 and 36.

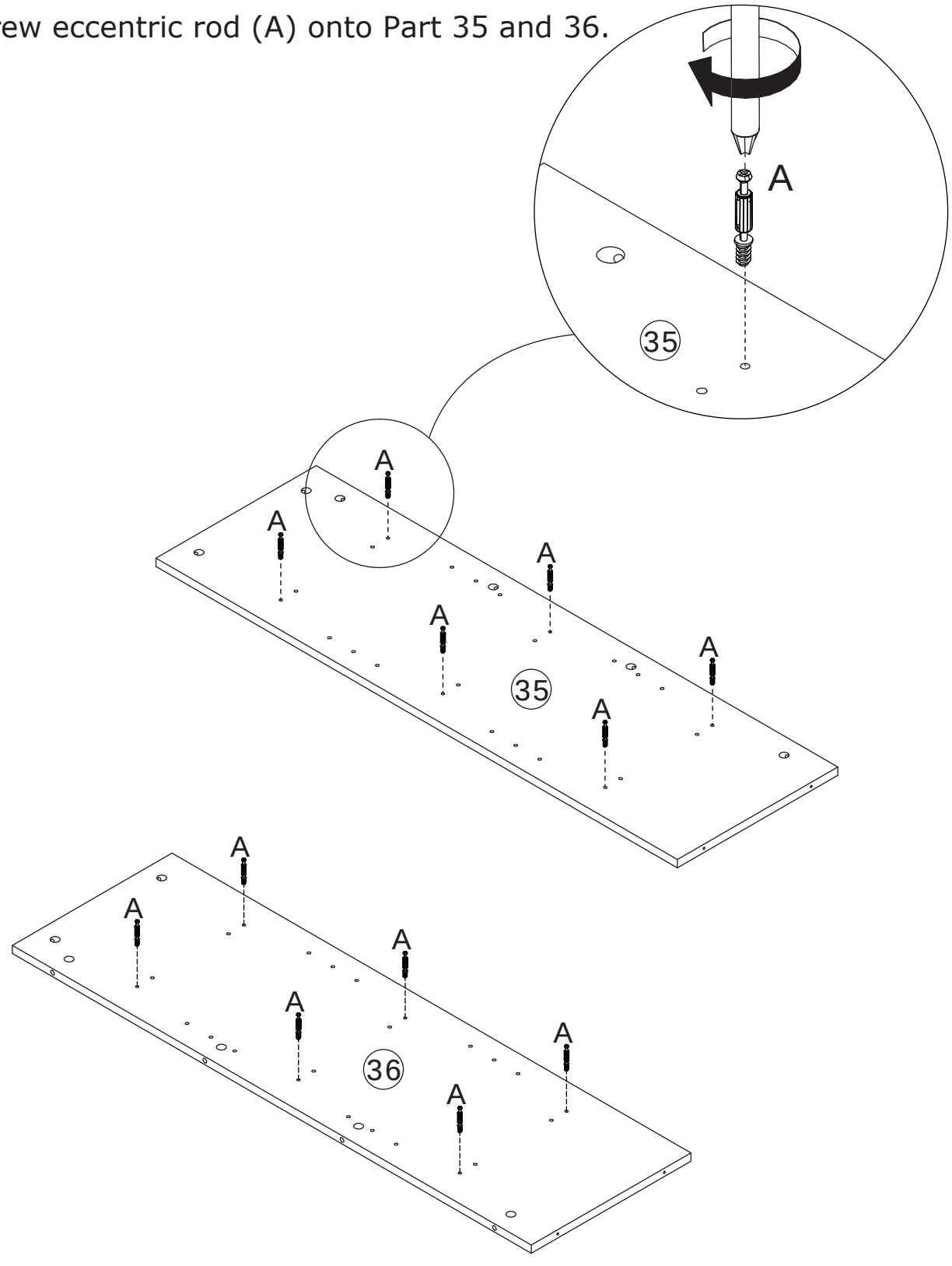

6

B x 12	C x 12	
	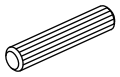	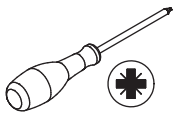
∅15 x 10 mm	∅6 x 40 mm	

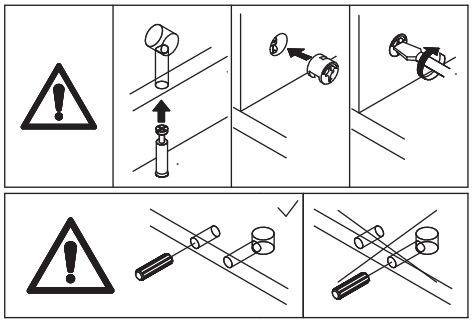

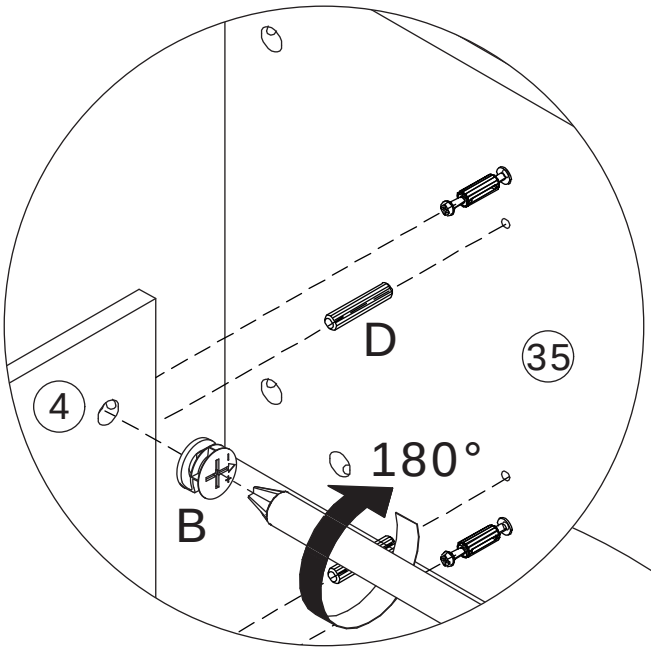

Connect Part 35 and 36 to Part 4 using wooden dowel (D), then tighten by turning eccentric wheel (B) clockwise.

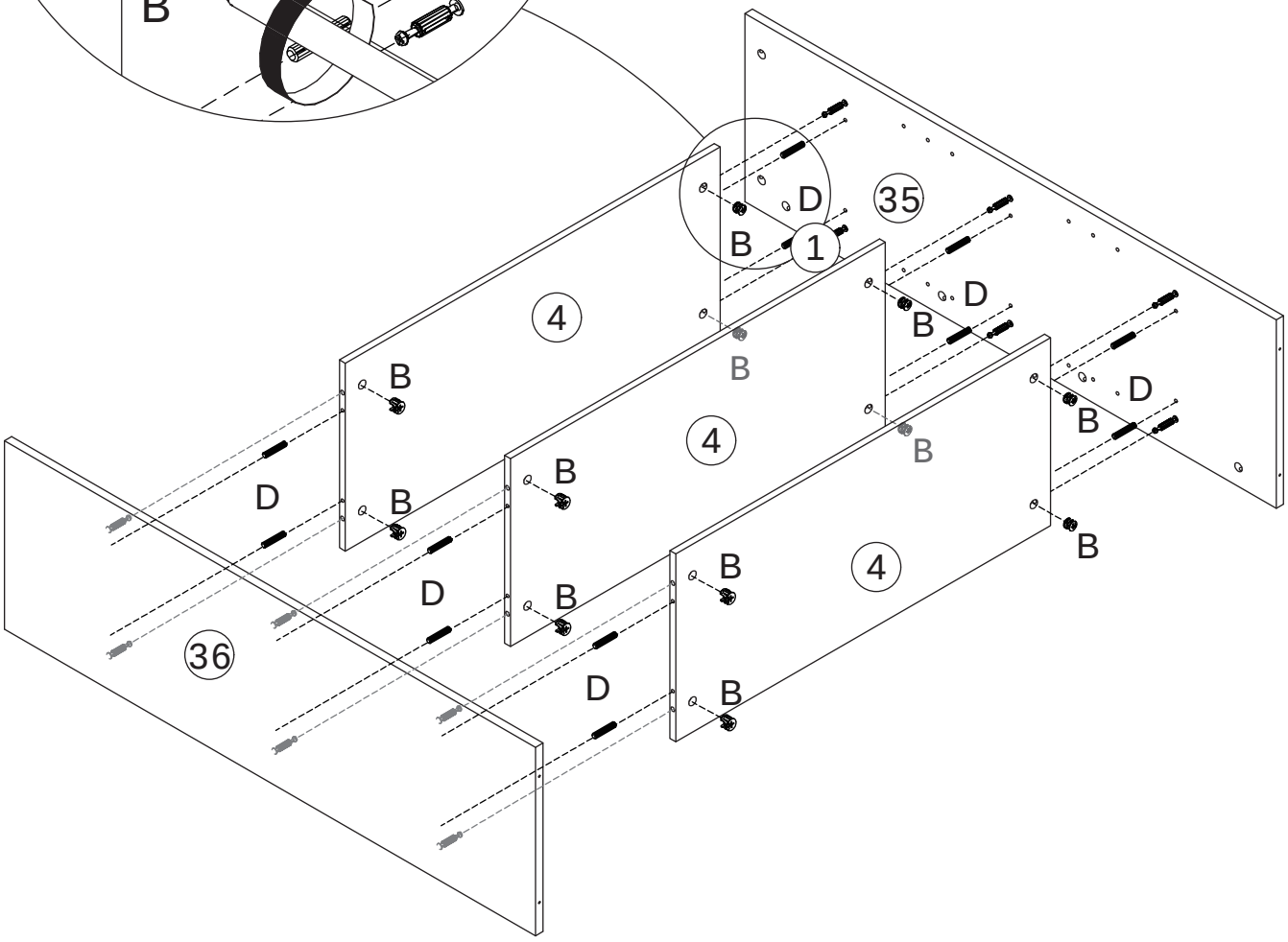

7

B x 4



∅15 x 10 mm

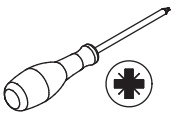

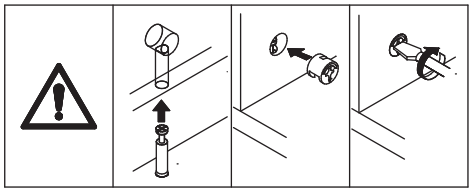

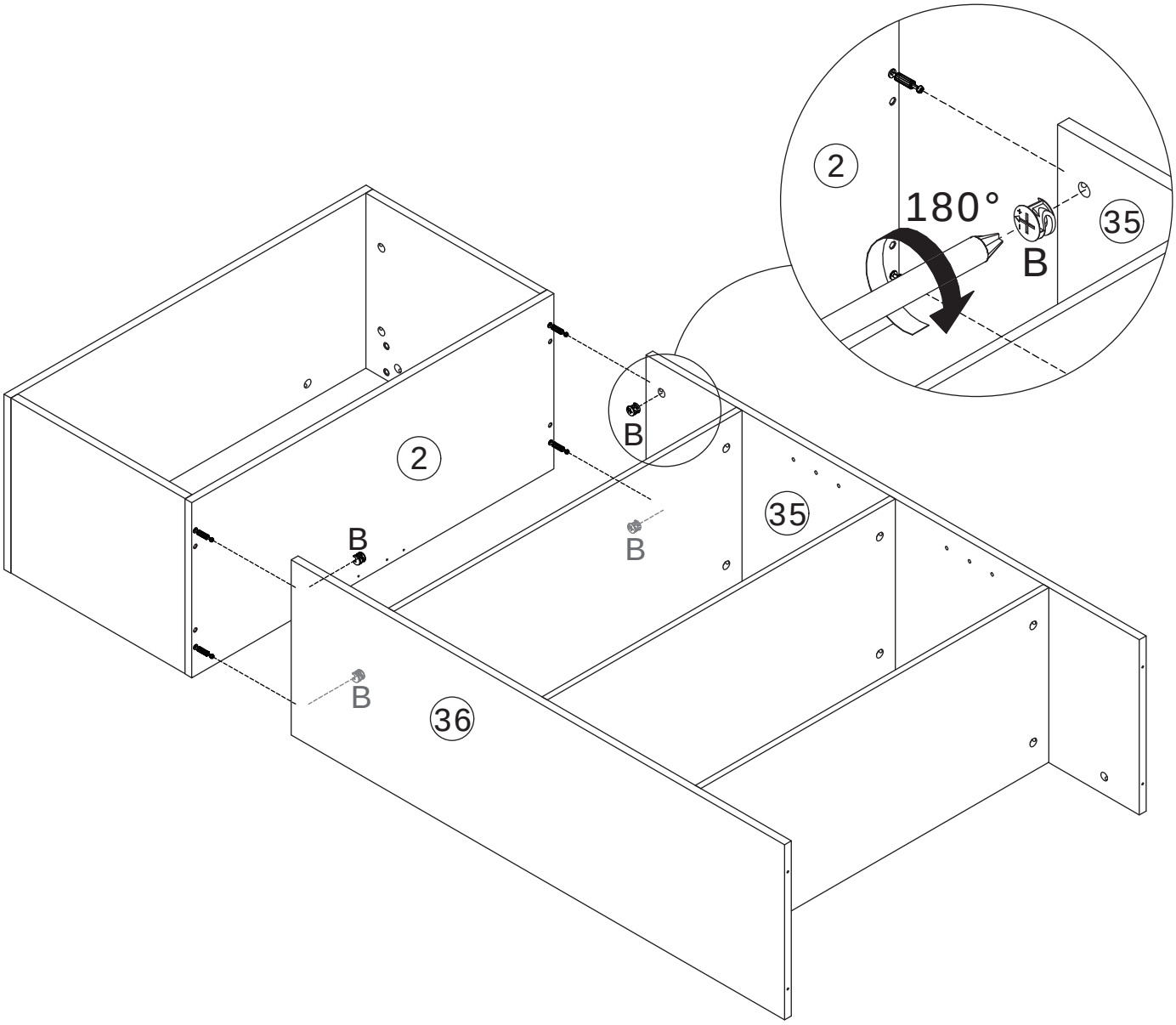

Connect Part 35 and 36 to Part 2, then tighten by turning eccentric wheel (B) clockwise.

8

A x 4

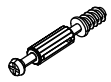

M5 x 42 mm

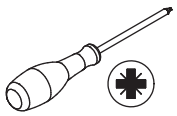

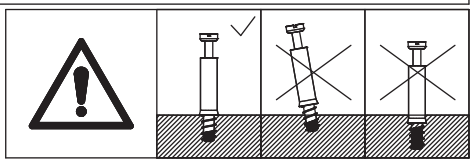

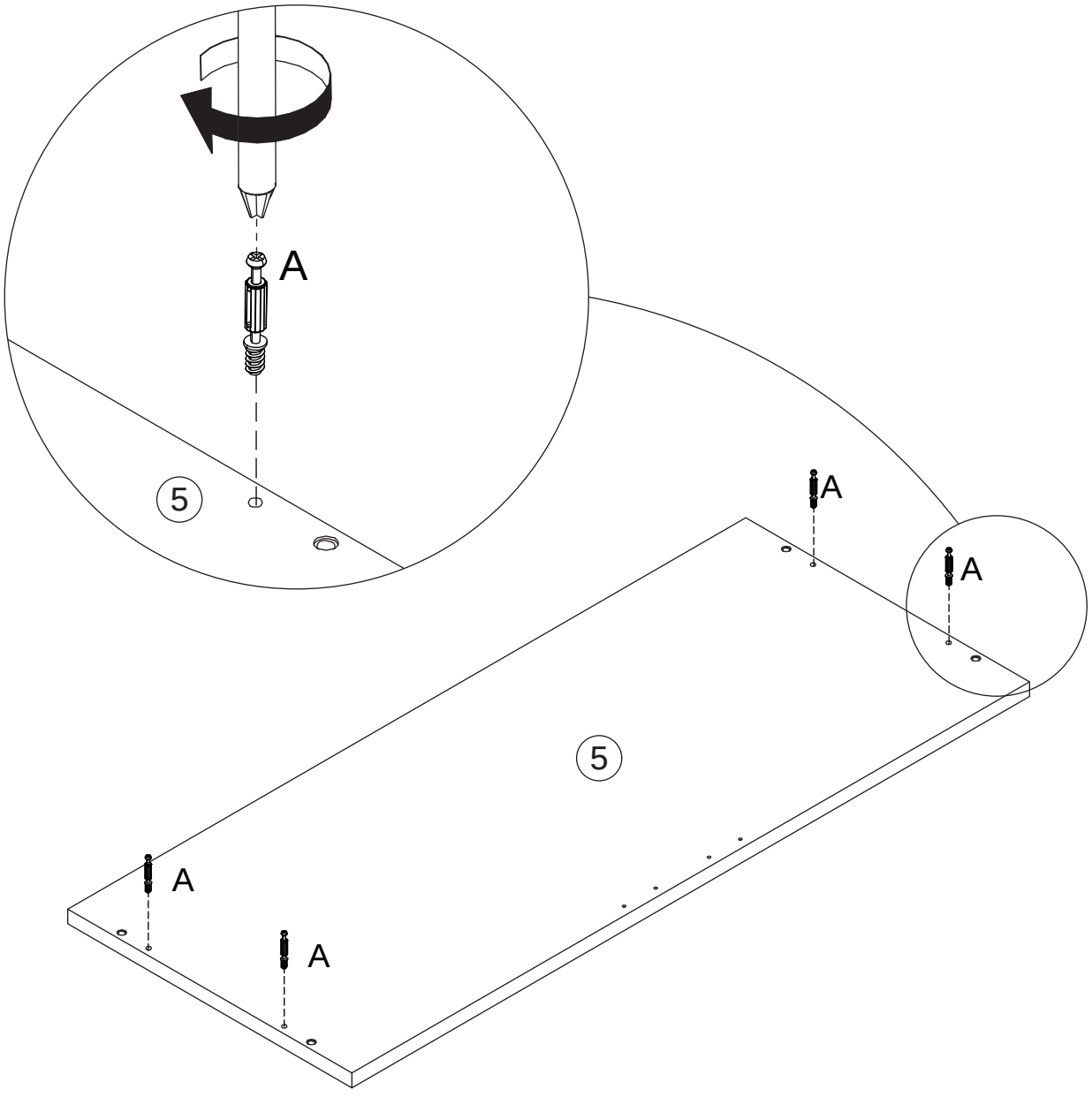

Screw eccentric rod (A) onto Part 5.

9

C x 4



M5 x 40 mm

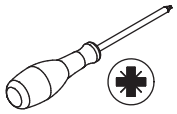

Connect Part 35 and 36 to Part 5, and secure them with screw (C).

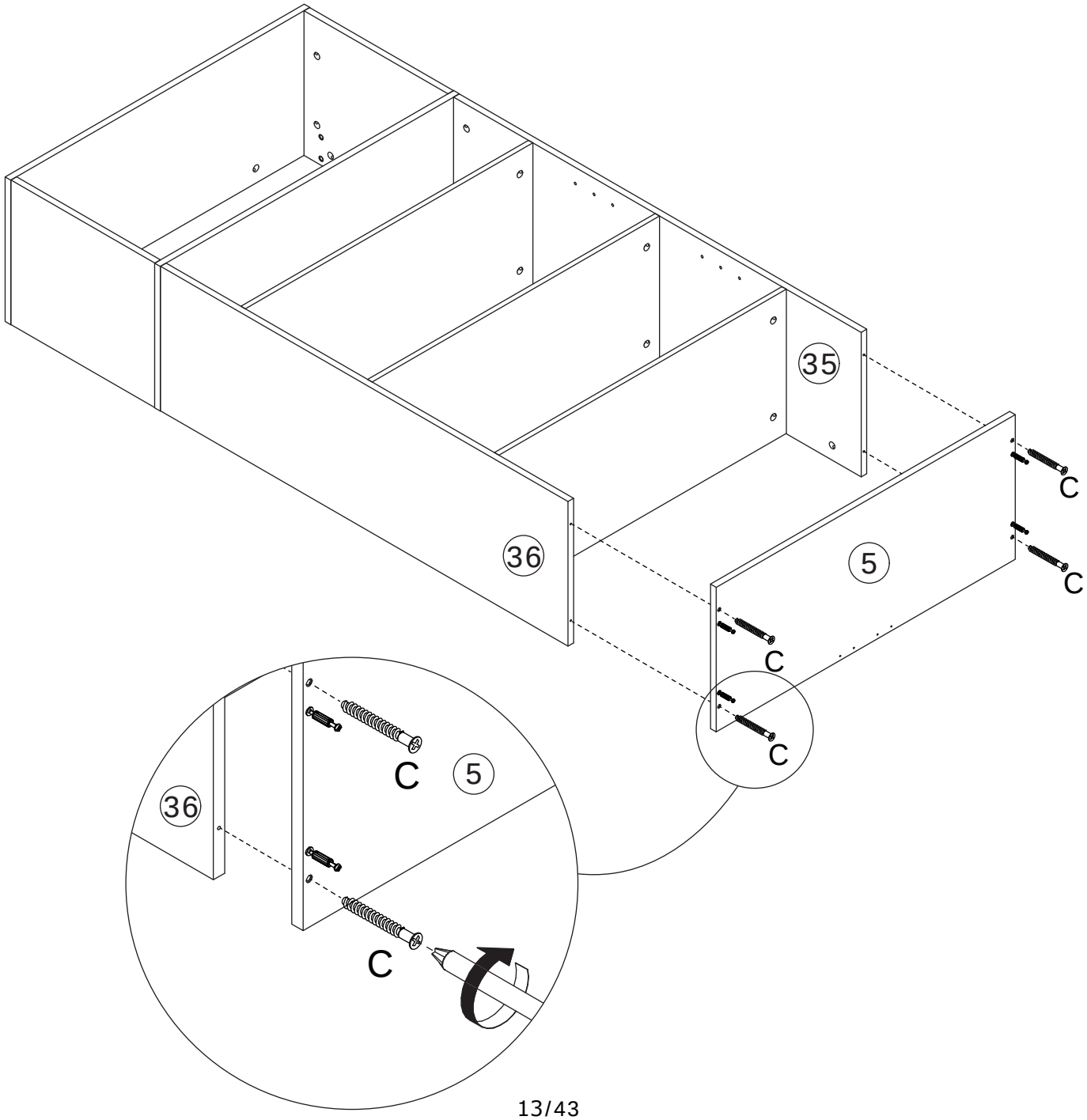

10

A x 4

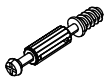

M5 x 42 mm

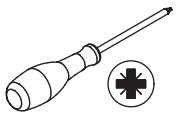

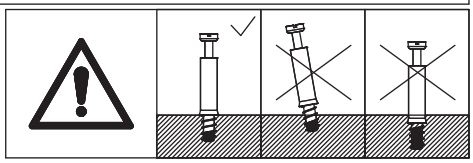

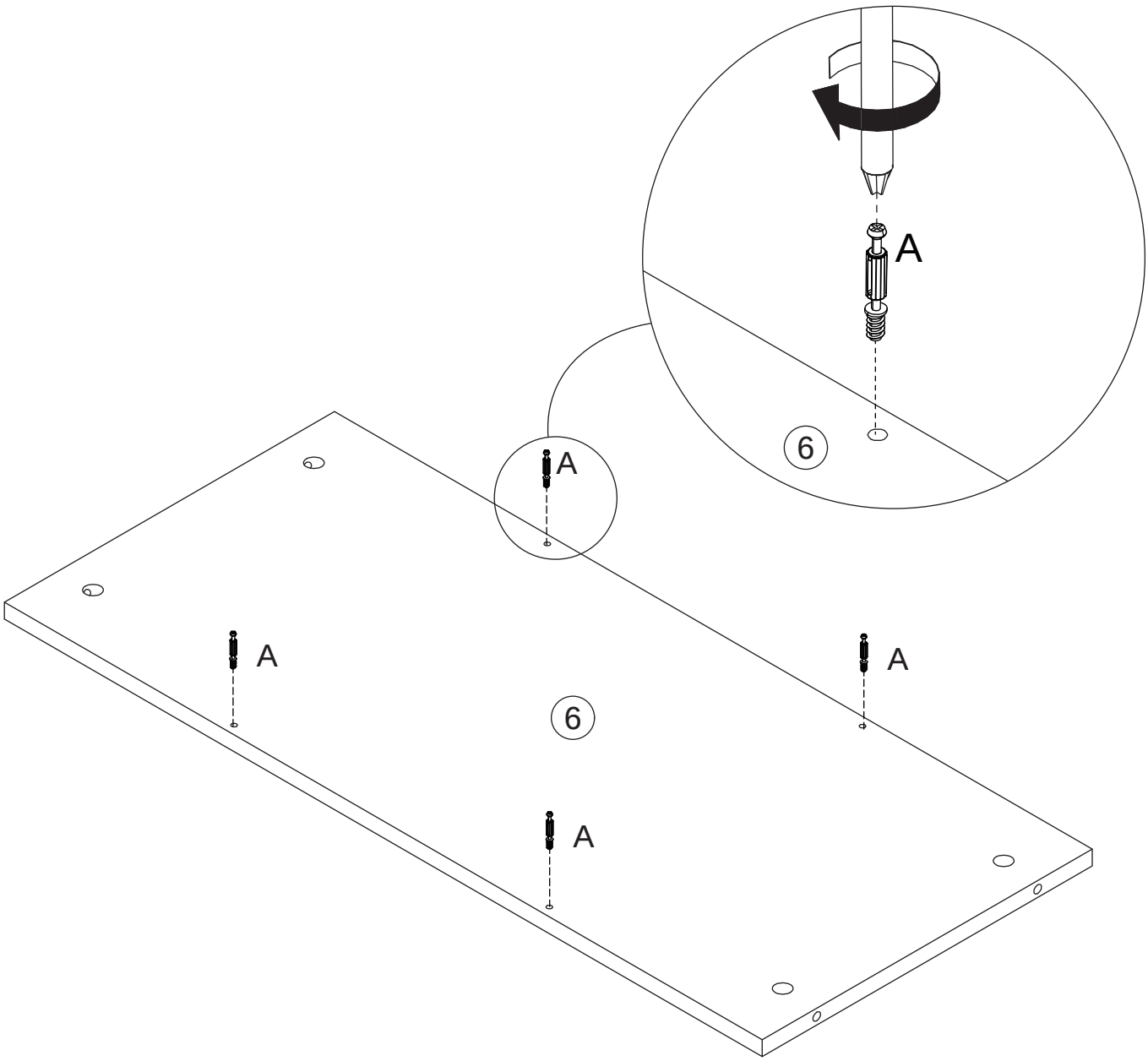

Screw eccentric rod (A) onto Part 6.

11

B x 4



∅15 x 10 mm

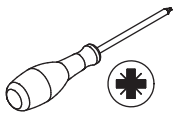

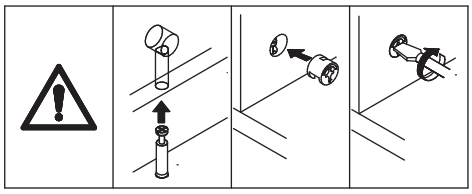

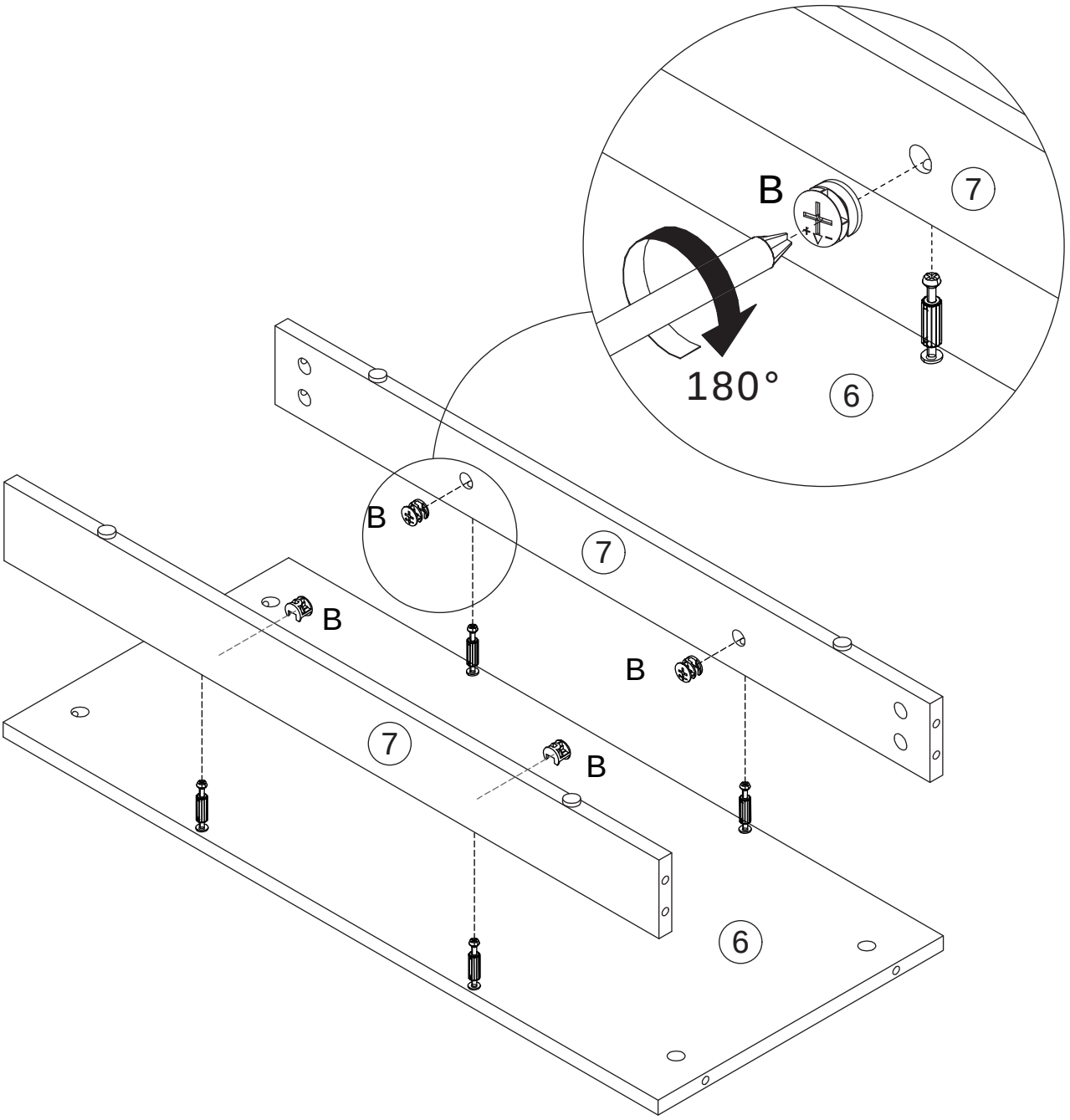

Connect Part 7 to Part 6, then tighten by turning eccentric wheel (B) clockwise.

12

A x 6

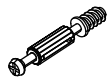

M5 x 42 mm

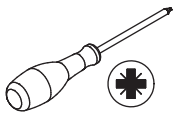

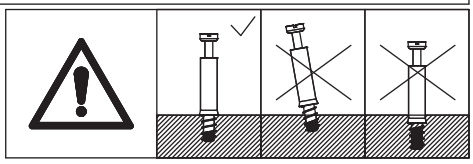

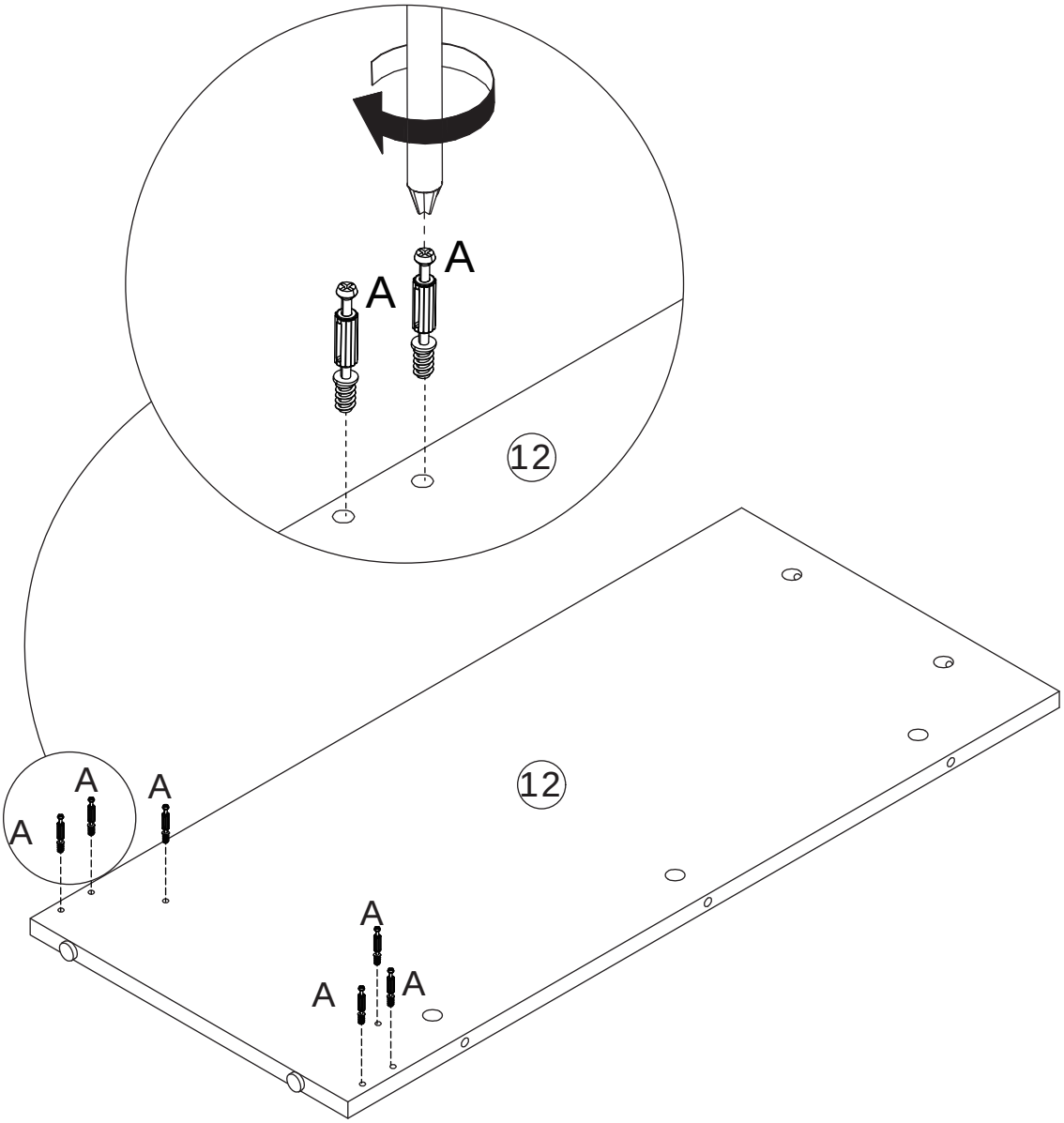

Screw eccentric rod (A) onto Part 12.

13

B x 6



∅15 x 10 mm

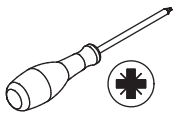

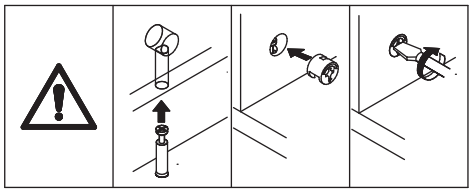

Connect Part 6 and 7 to Part 12, then tighten by turning eccentric wheel (B) clockwise.

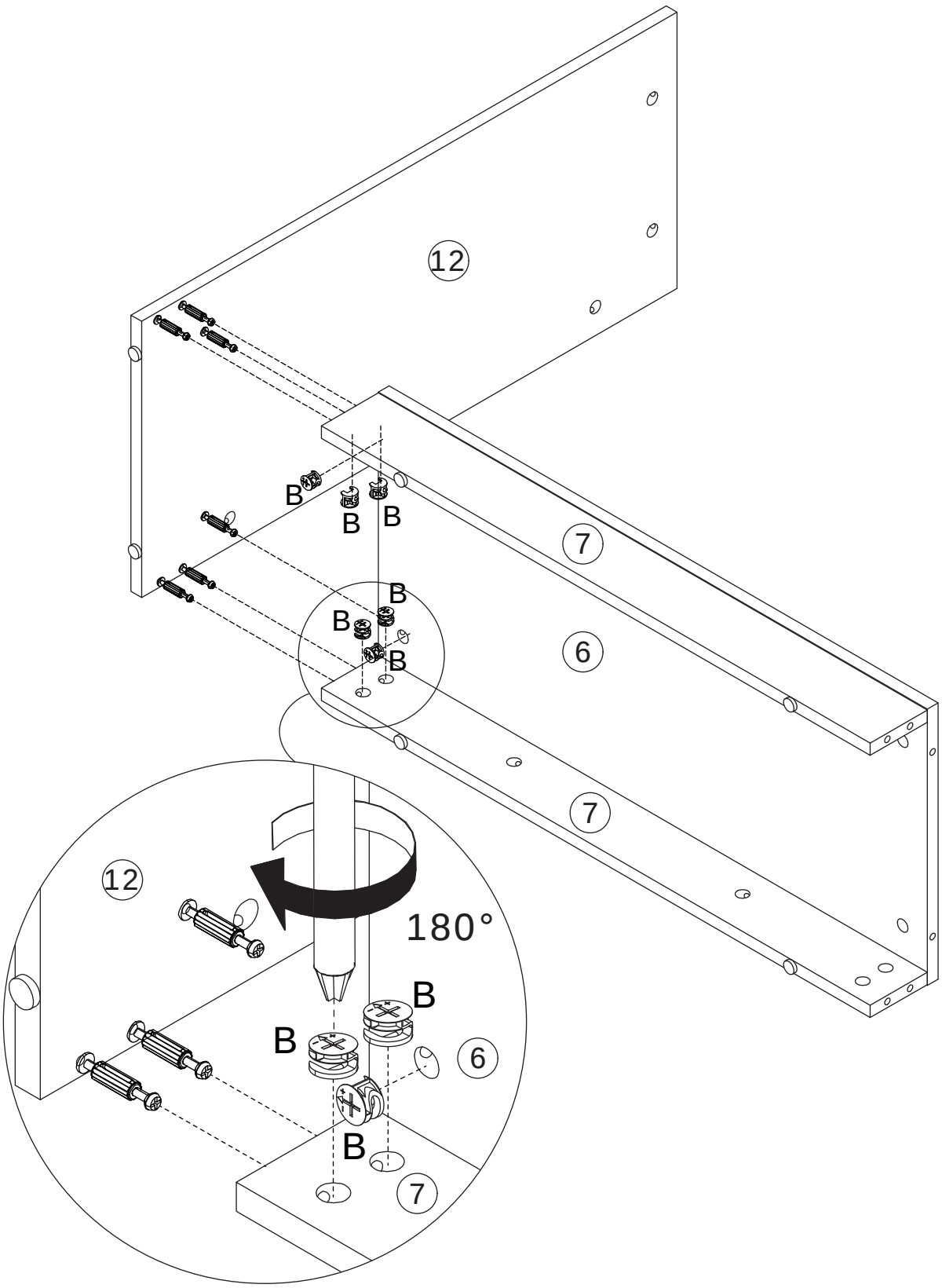

14

A x 6

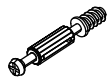

M5 x 42 mm

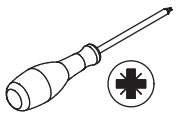

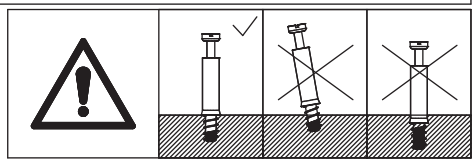

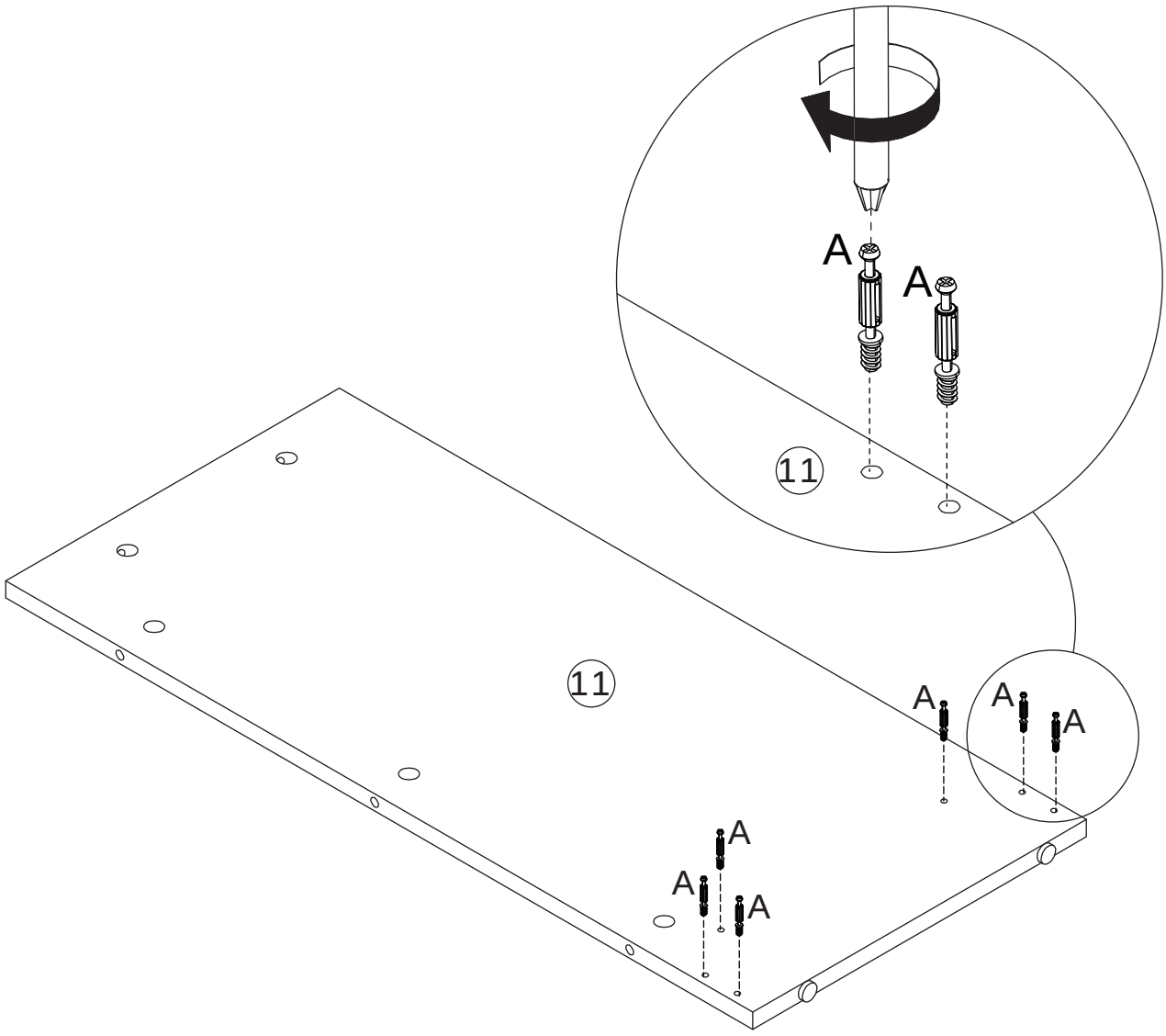

Screw eccentric rod (A) onto Part 11.

15

B x 6



∅15 x 10 mm

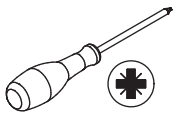

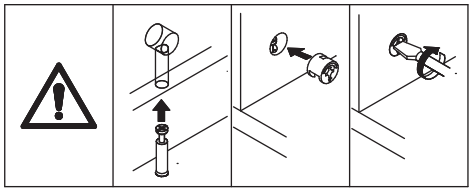

Connect Part 6 and 7 to Part 11, then tighten by turning eccentric wheel (B) clockwise.

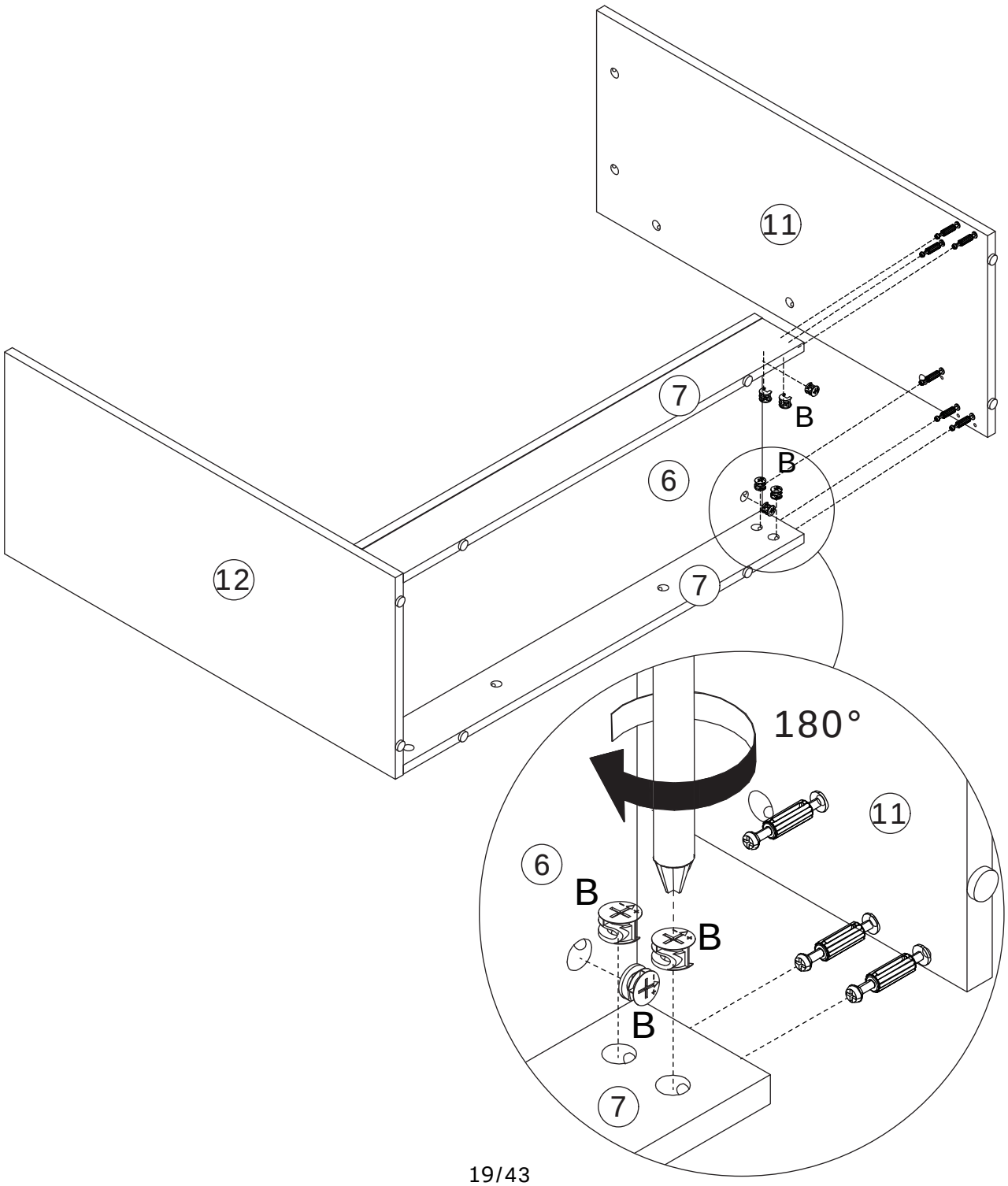

16

B x 4



∅15 x 10 mm

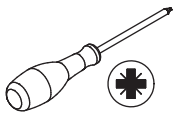

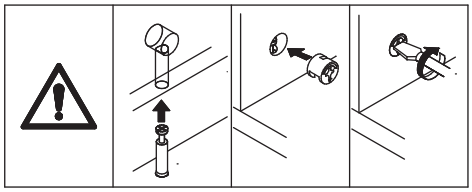

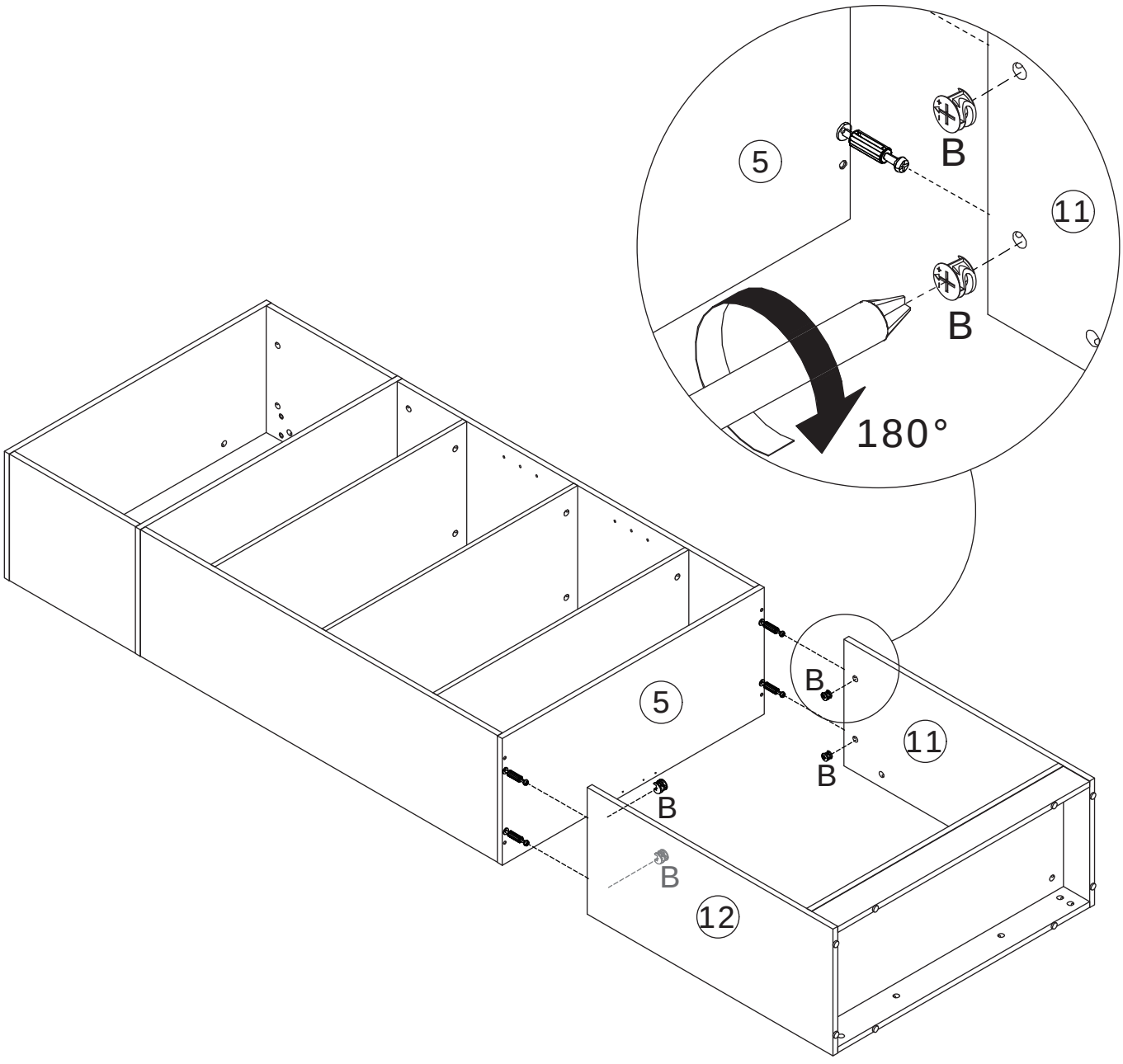

Connect Part 11 and 12 to Part 5, then tighten by turning eccentric wheel (B) clockwise.

17

L x 10



M3.5 x 14 mm

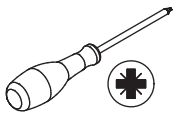

Connect Part 10 and 28 to Part 32, and secure them to Part 1, 33, and 34 using screw (L).

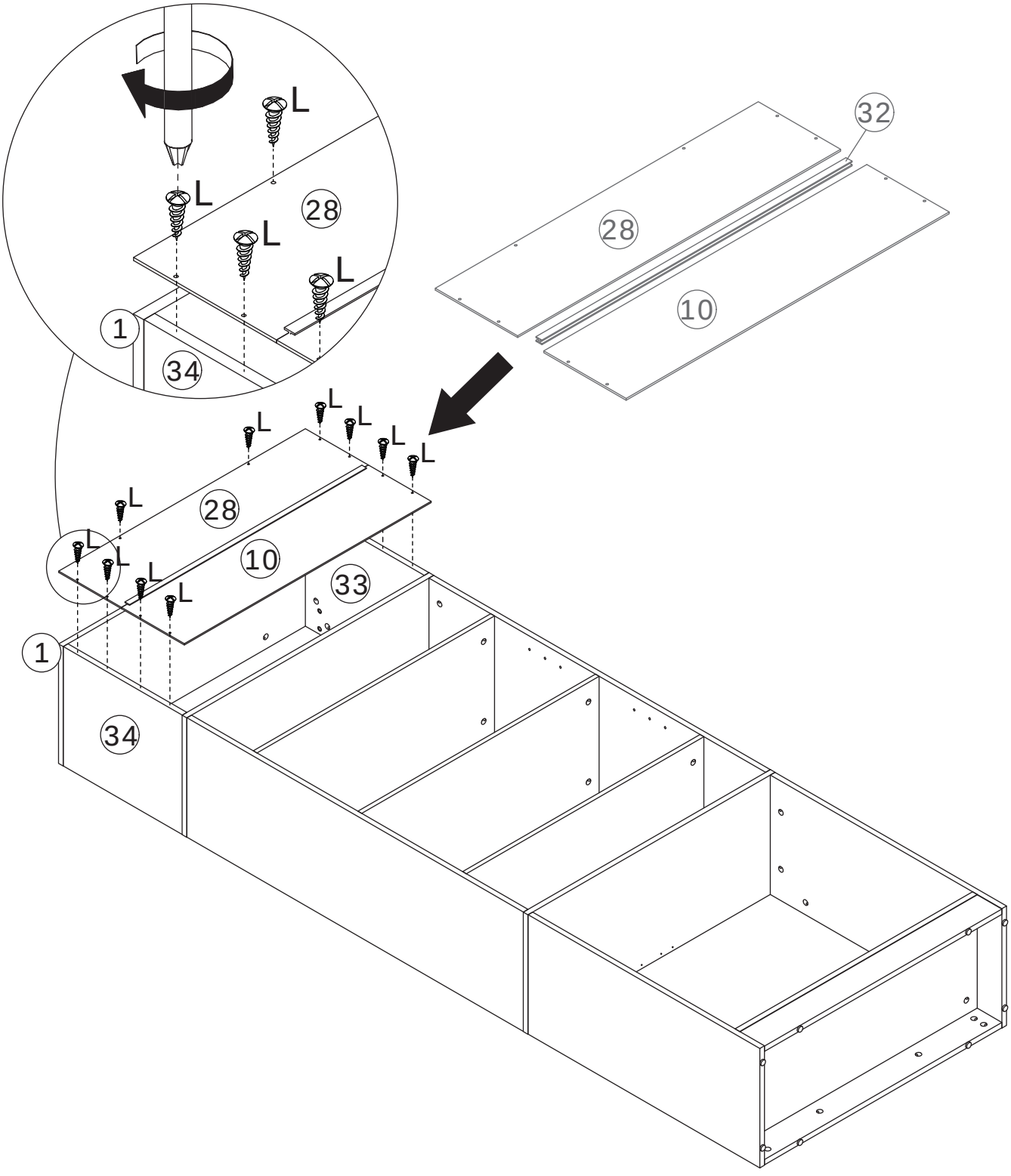

18

L x 26



M3.5 x 14 mm

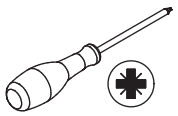

Connect Part 30 and 31 to Part 32, and secure them to Part 6, 11, 12, 35, and 36 using screw (L).

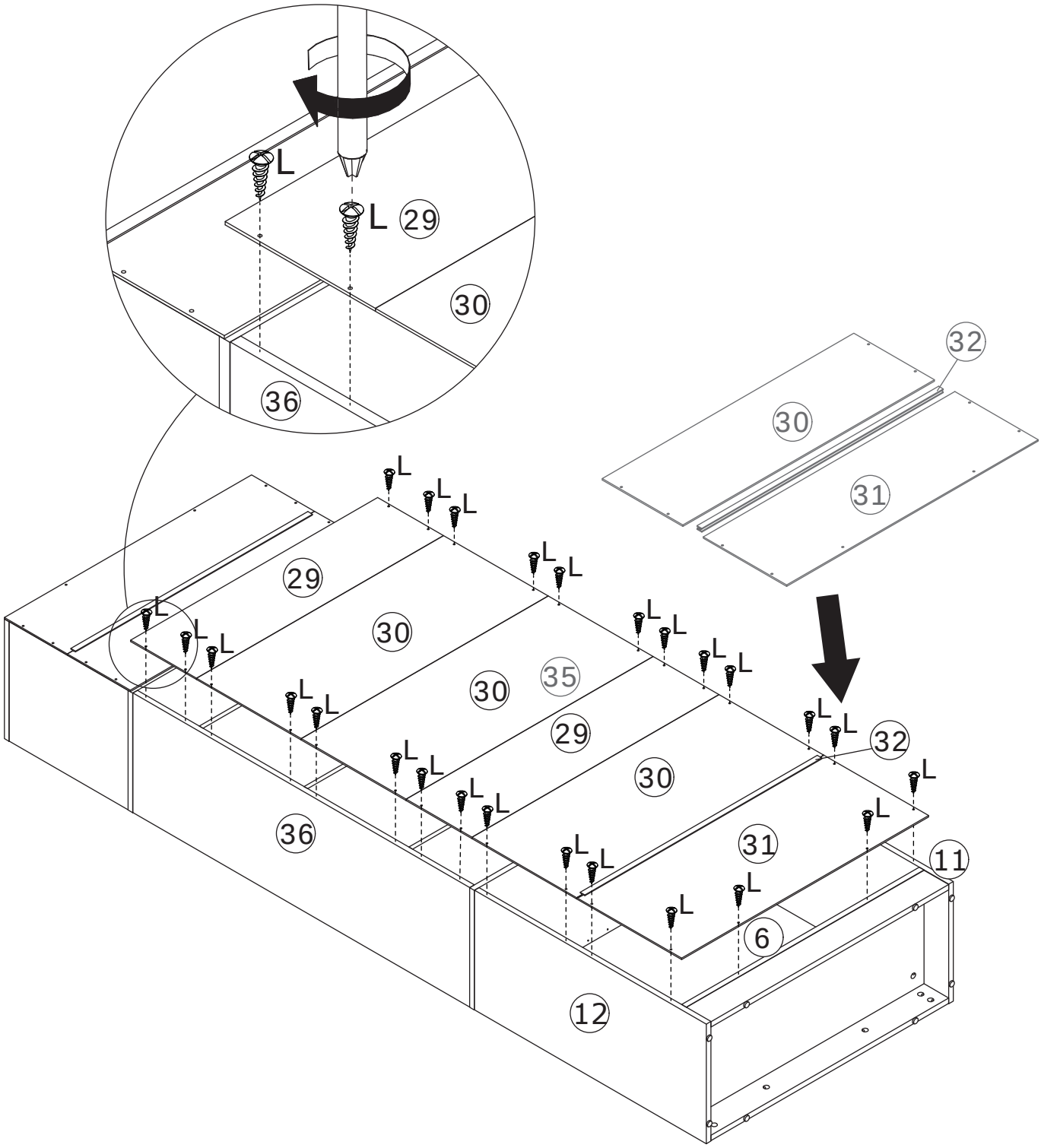
L
L
29
30
36
32
30
31
L
L
L

19

Q x 25	R x 25	
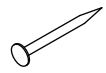		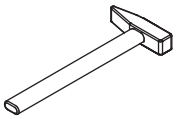
∅1.5 x 15 mm	15 x 10 mm	

Secure iron plate (R) to Part 10, 29, and 30 using nail (Q).

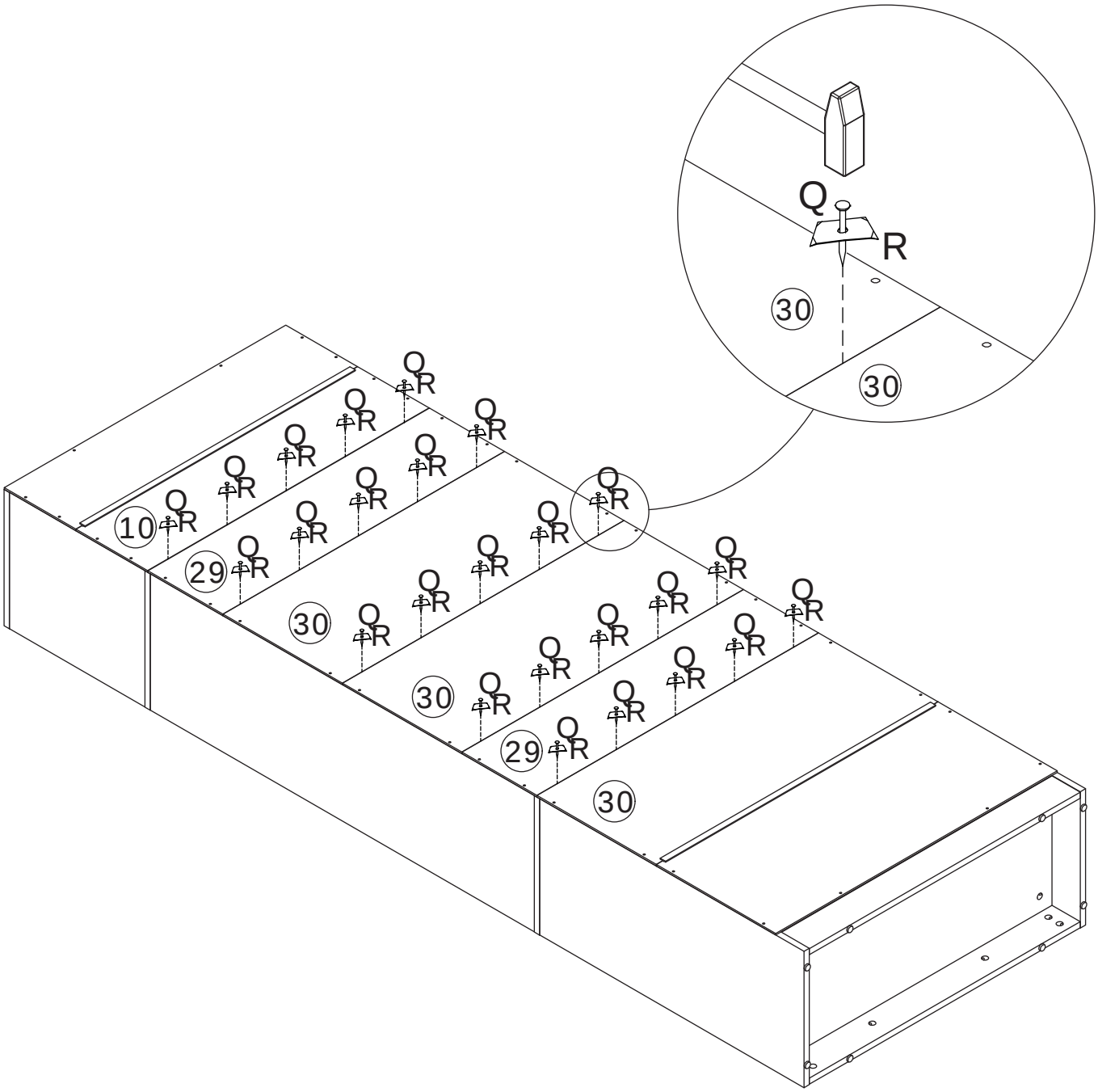

20

I x 4	K x 8	
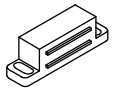	 M3 x 14 mm	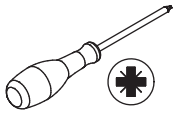

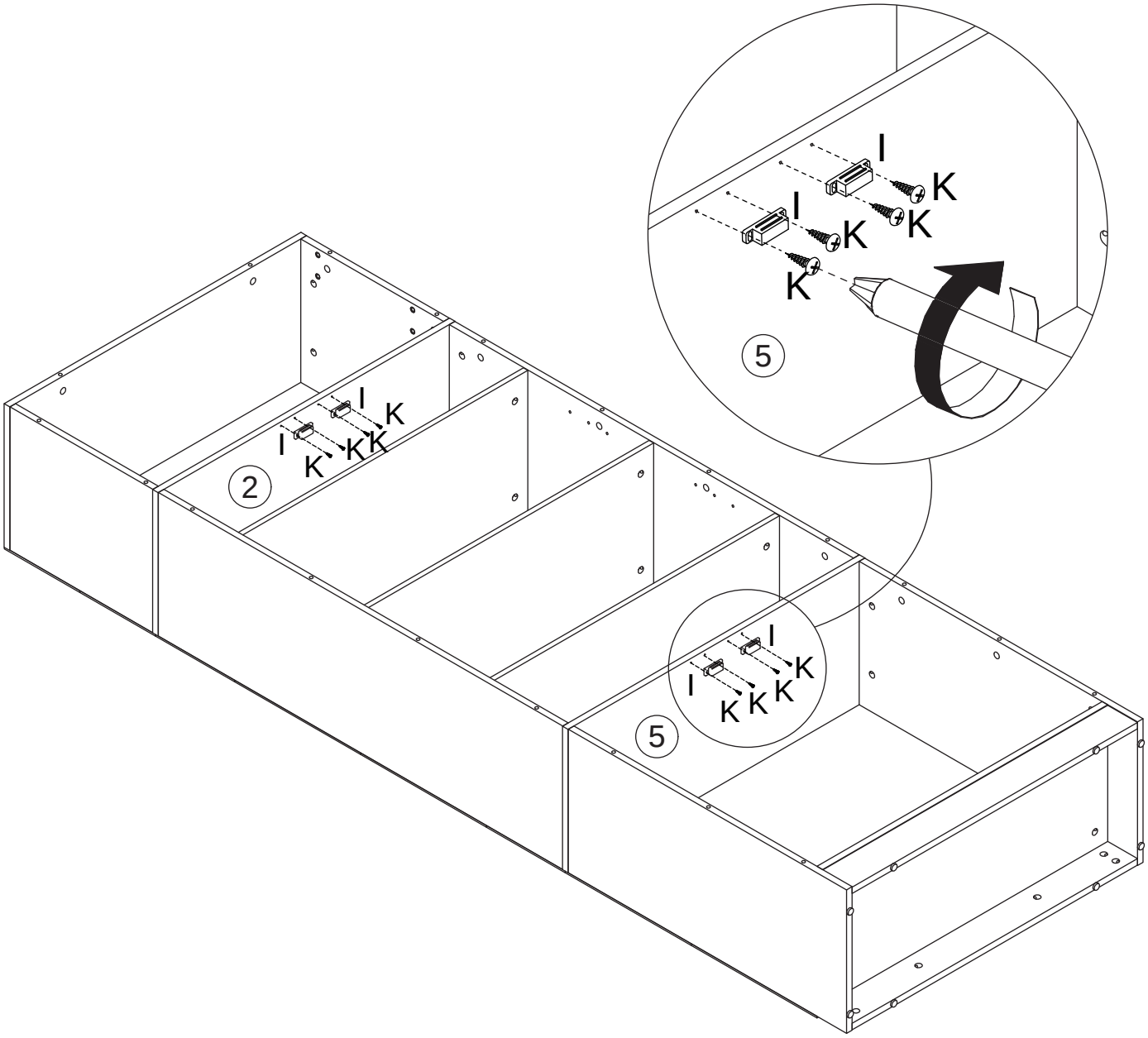

Secure magnet (I) to Part 2 and 5 using screw (D).

21

A x 2	B x 2	
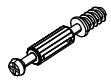		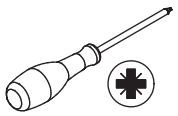
M5 x 42 mm	∅15 x 10 mm	

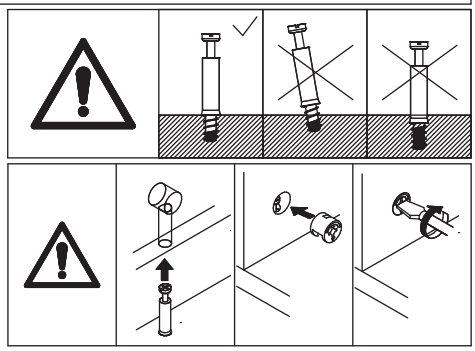

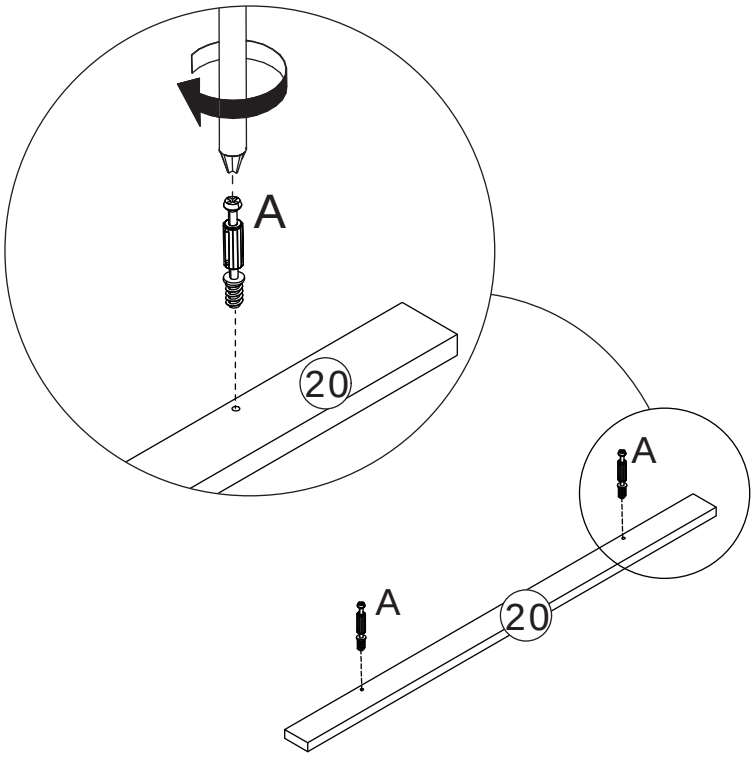

Screw eccentric rod (A) onto Part 20.
Connect Part 20 to Part 1, then tighten by turning eccentric wheel (B) clockwise.

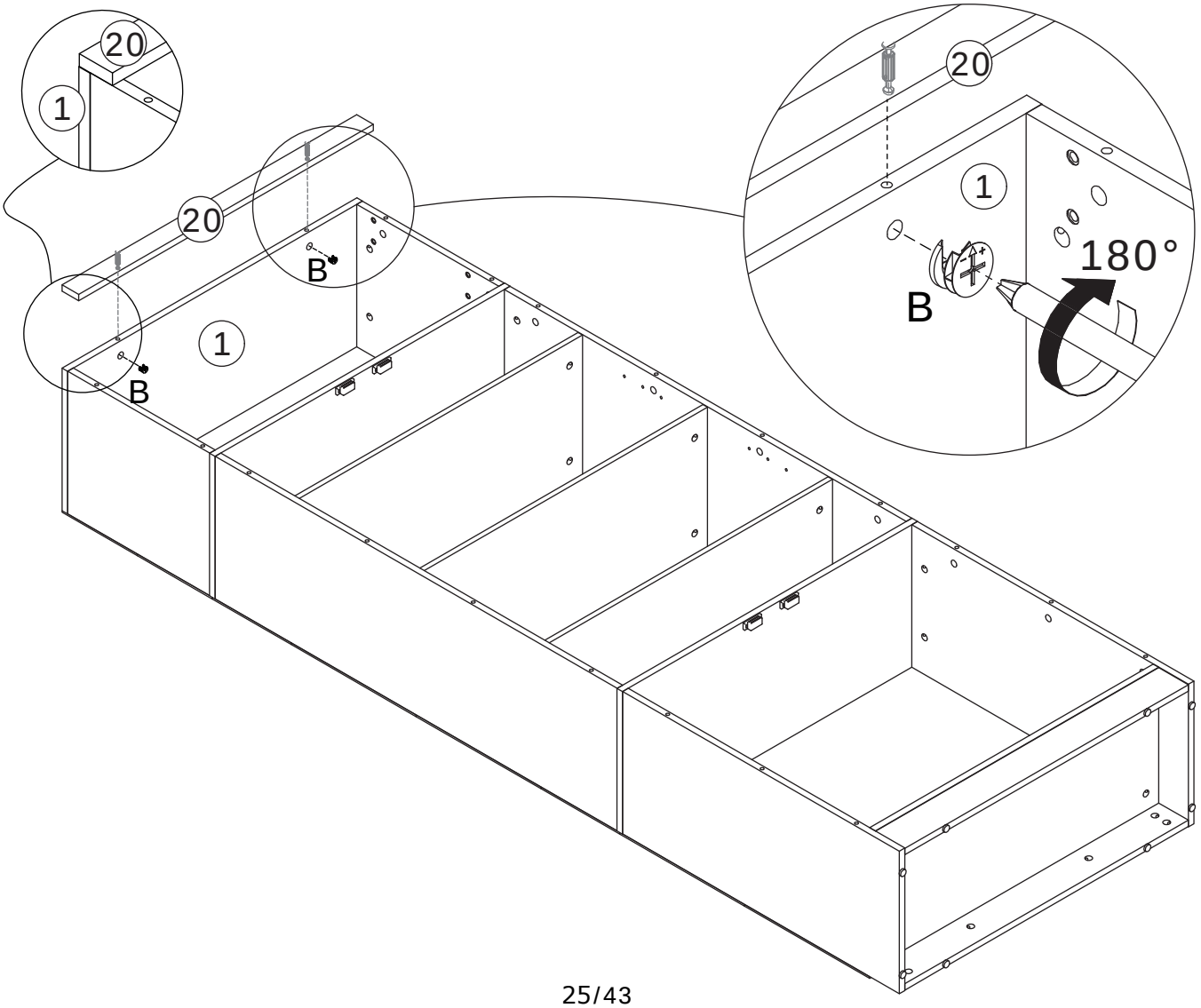

22

A x 4	B x 4	
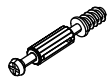		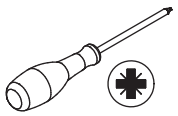
M5 x 42 mm	∅15 x 10 mm	

Screw eccentric rod (A) onto Part 21. Connect Part 21 to Part 33 and 34, then tighten by turning eccentric wheel (B) clockwise.

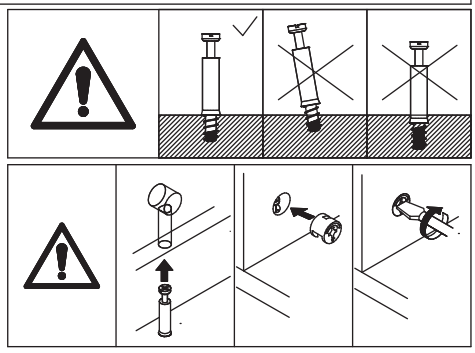

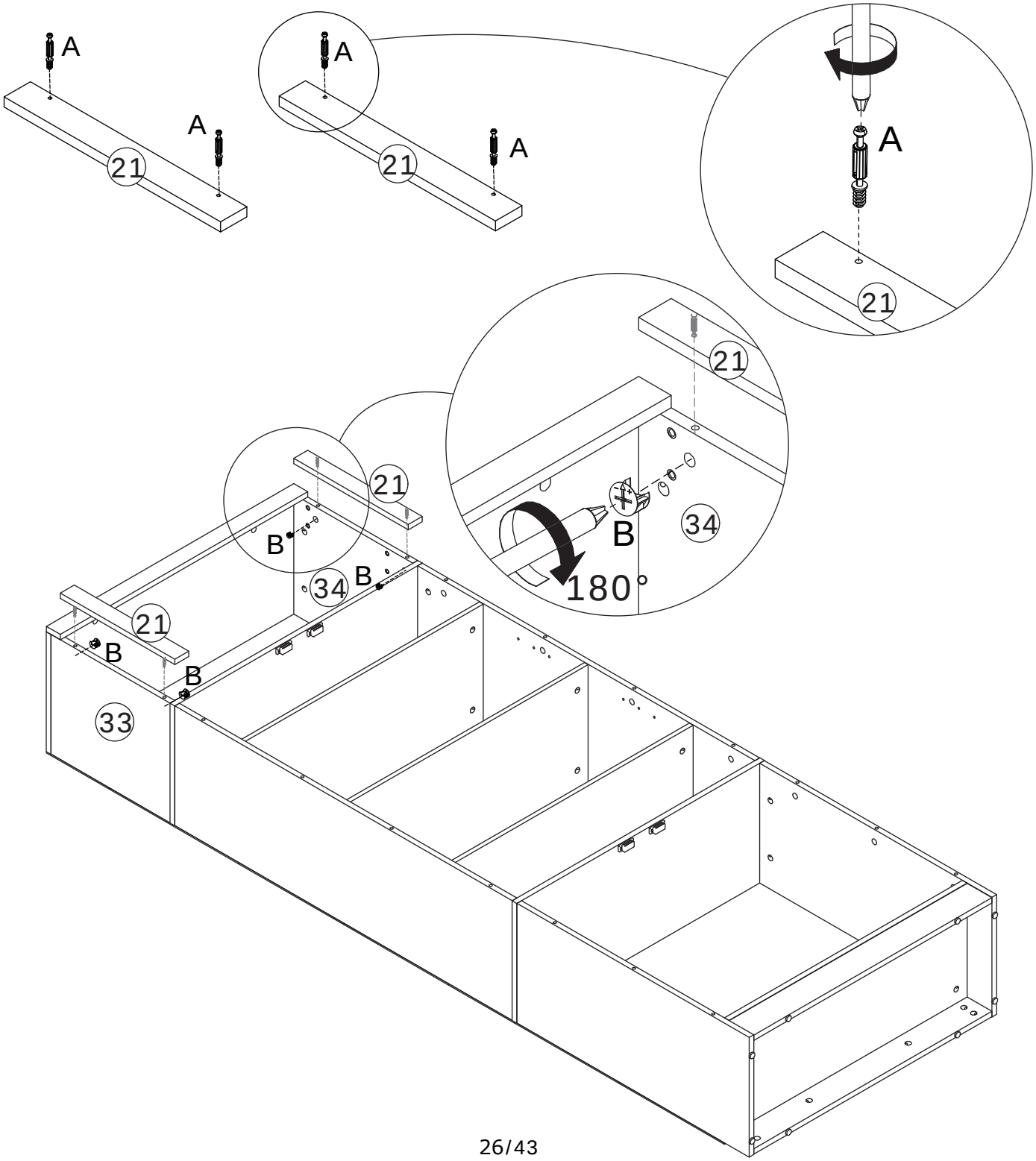

23

M x 6	x 1	
		
M6 x 35 mm	#4	

Secure Part 18 and 19 to Part 1 using bolt (M).

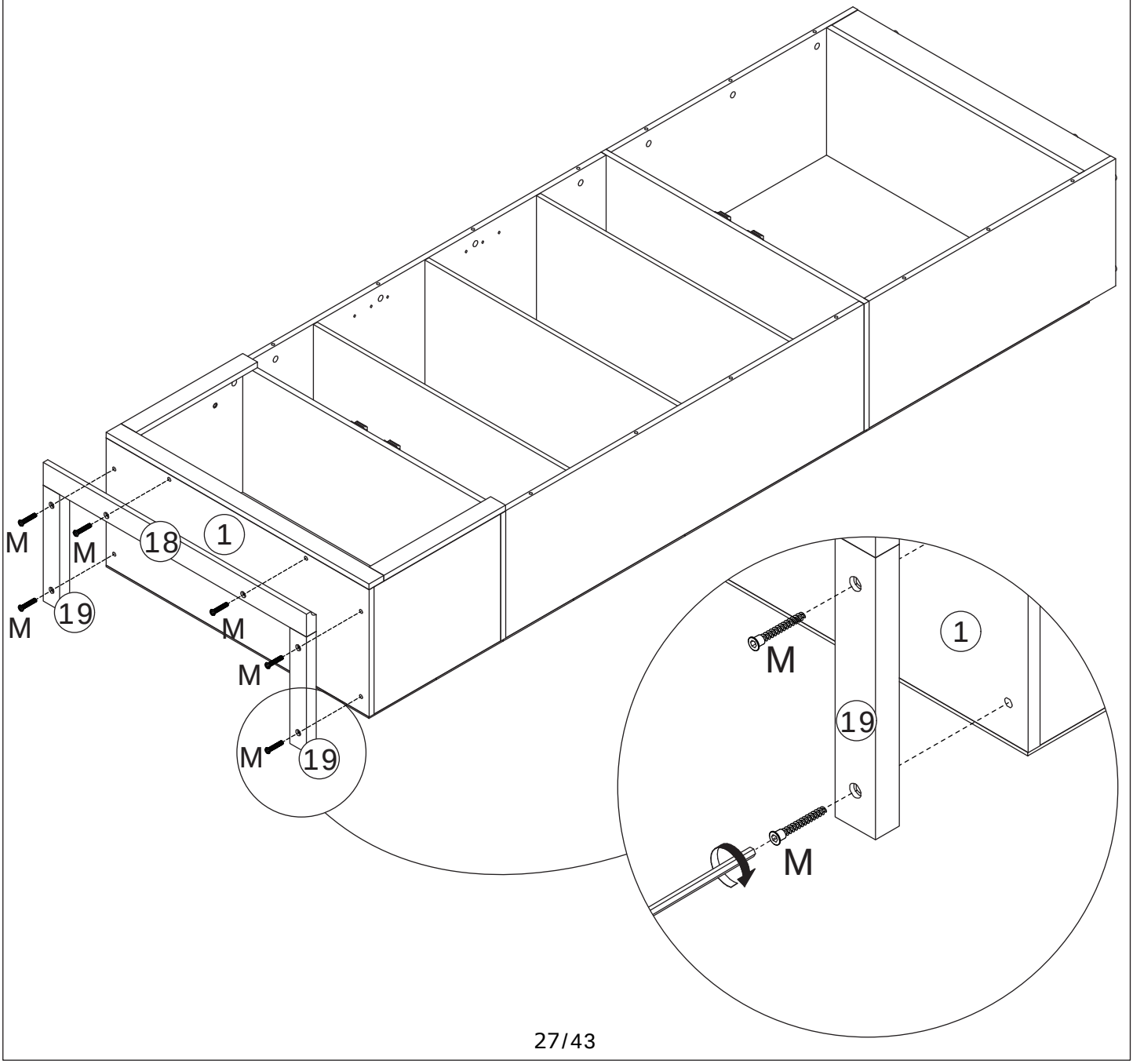

24

M x 8	x 1	
		
M6 x 35 mm	#4	

Secure Part 26 and 27 to Part 33 and 34, respectively using bolt (M).

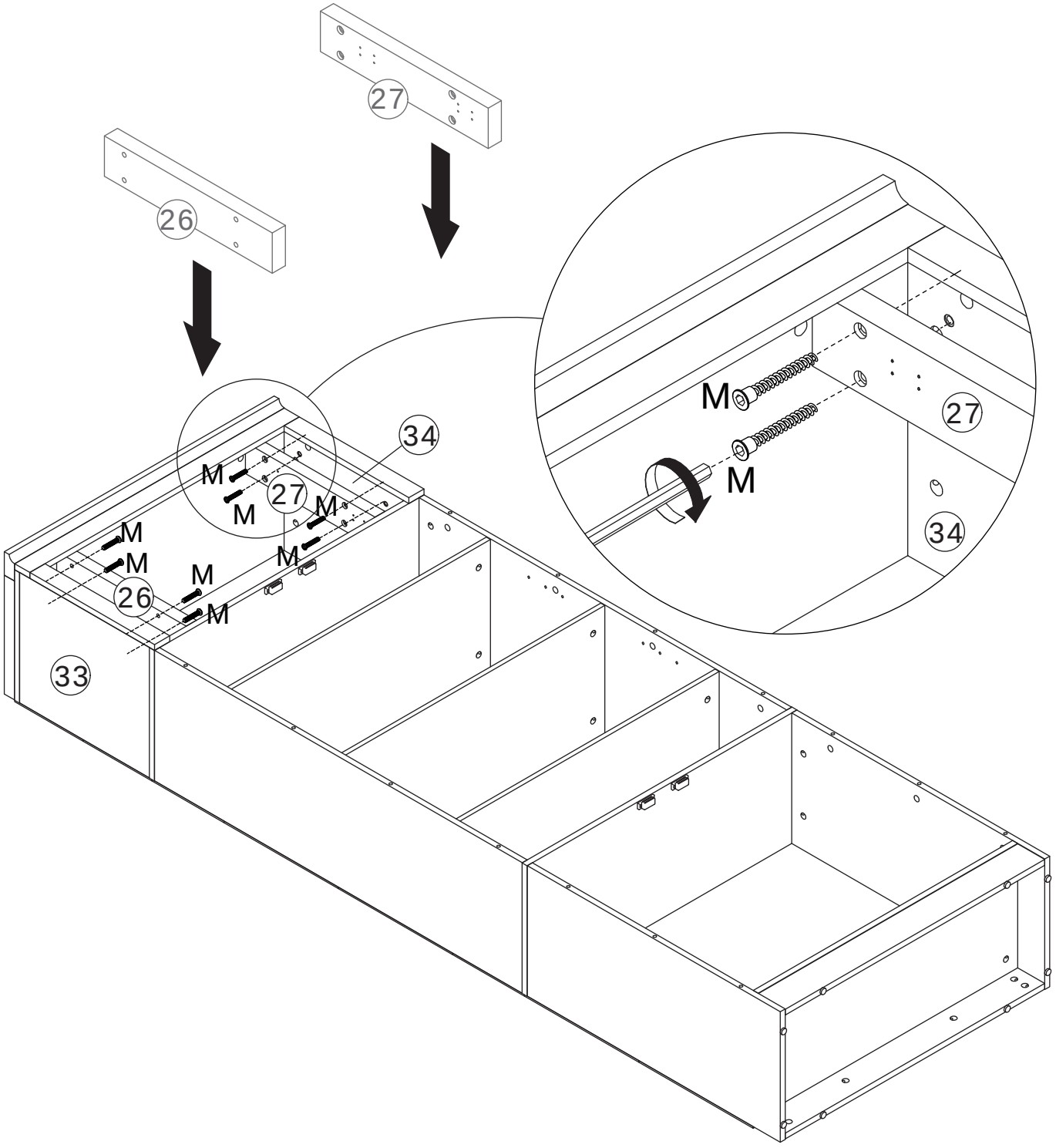

25

E x 8	H x 4	F x 2	G x 4	
	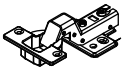			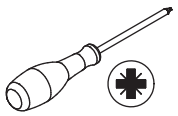
M3.5 x 14 mm	DW	111-96	M4 x 20 mm	

Secure hinge (H) to Part 13 using screw (E).
Secure handle (F) to Part 13 using screw (G).

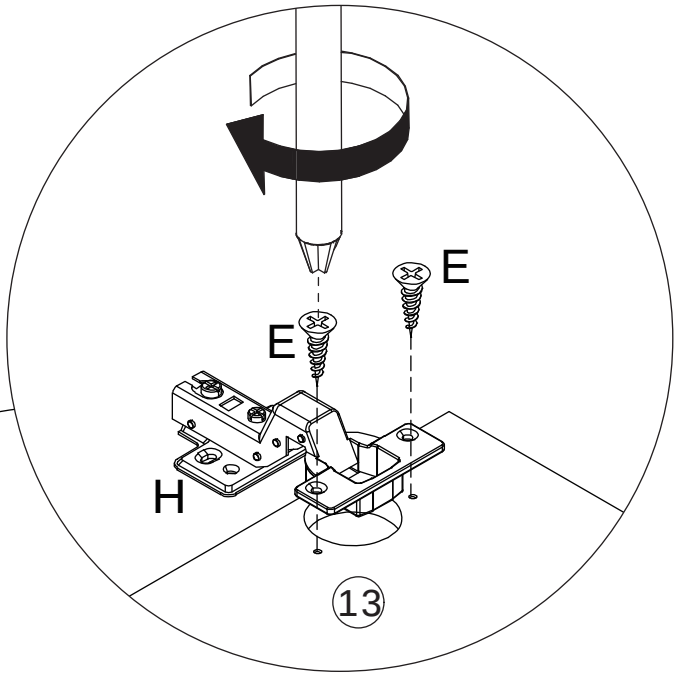

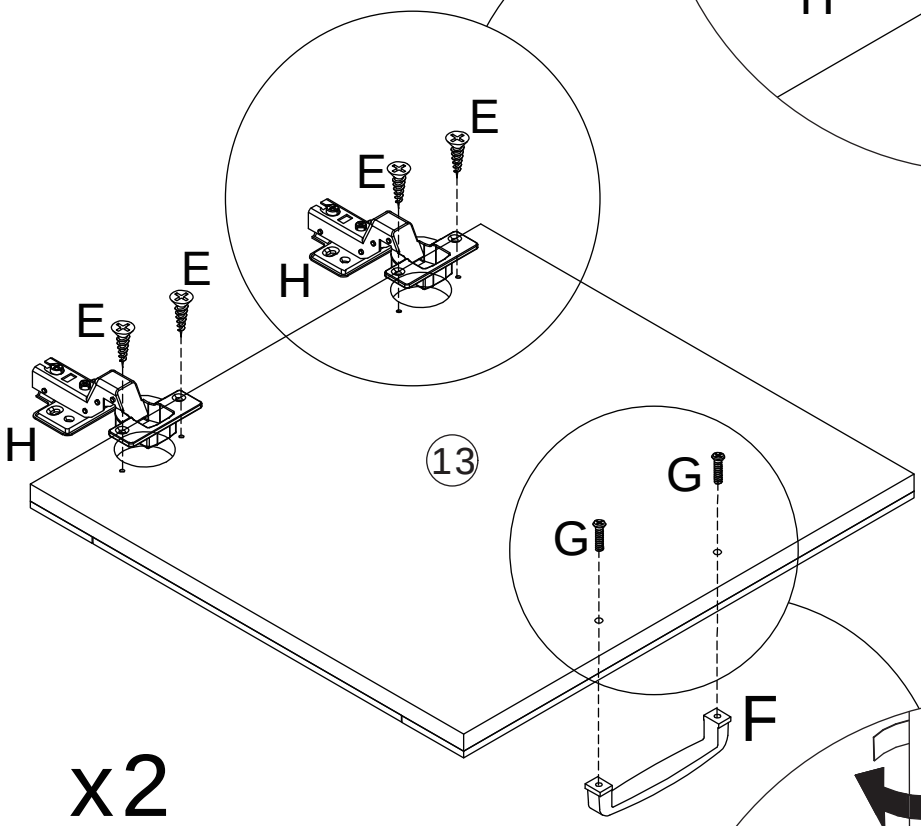

x2

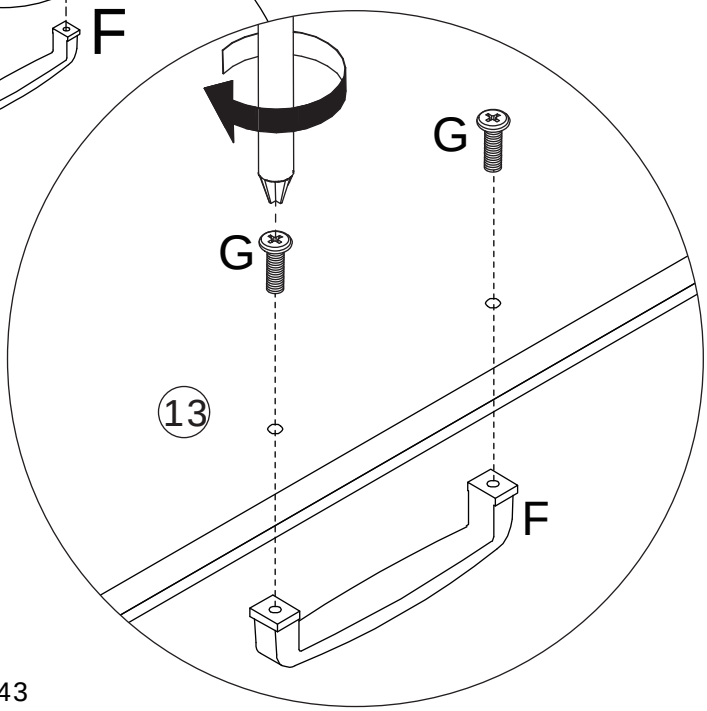

26

E x 16



M3.5 x 14 mm

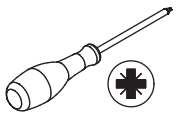

Secure Part 13 to Part 26 and 27, respectively,
via hinges using screw (E).

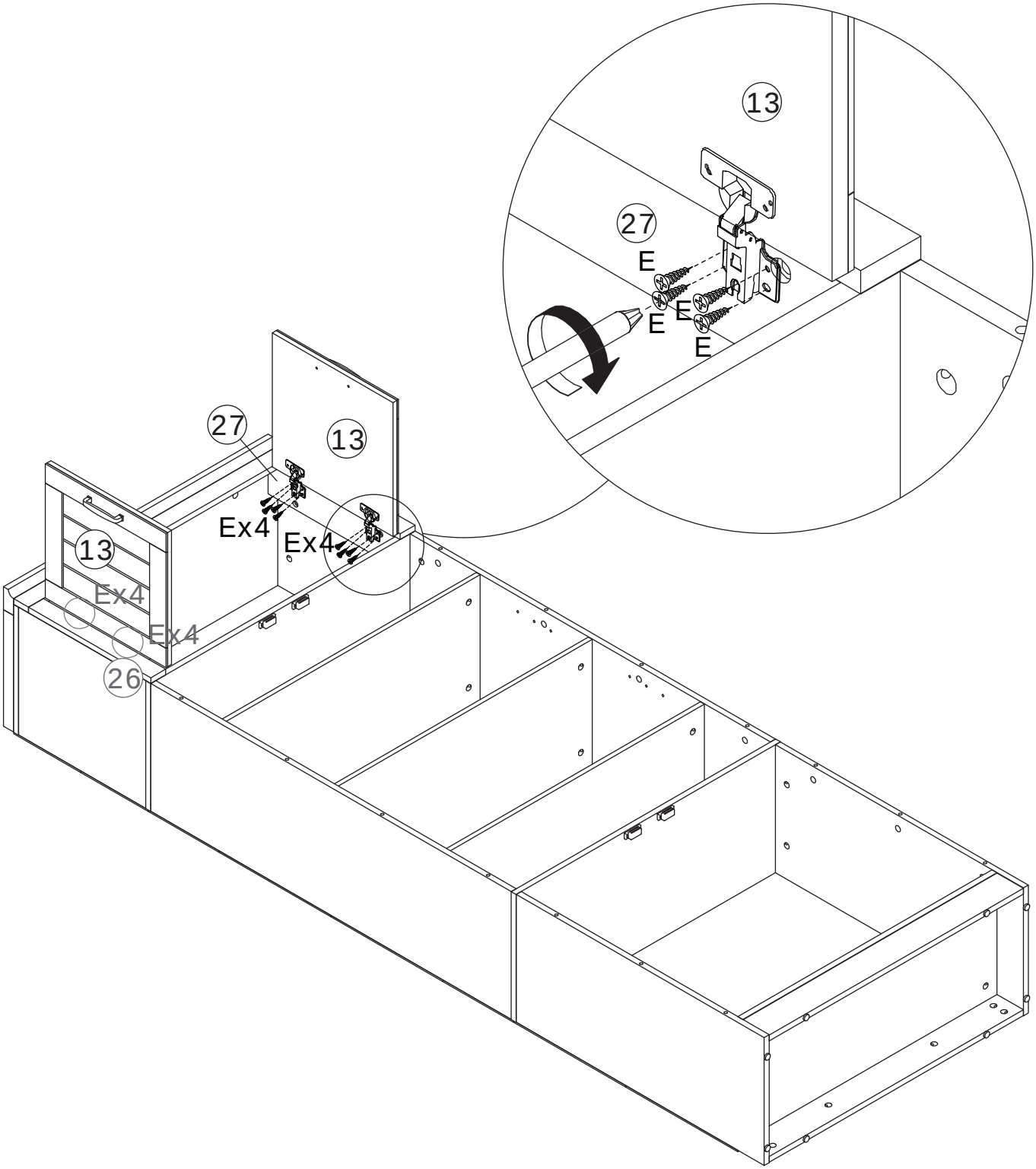

27

Turn the assembly unit upright.

Note: Two or more adults are required to complete this step.

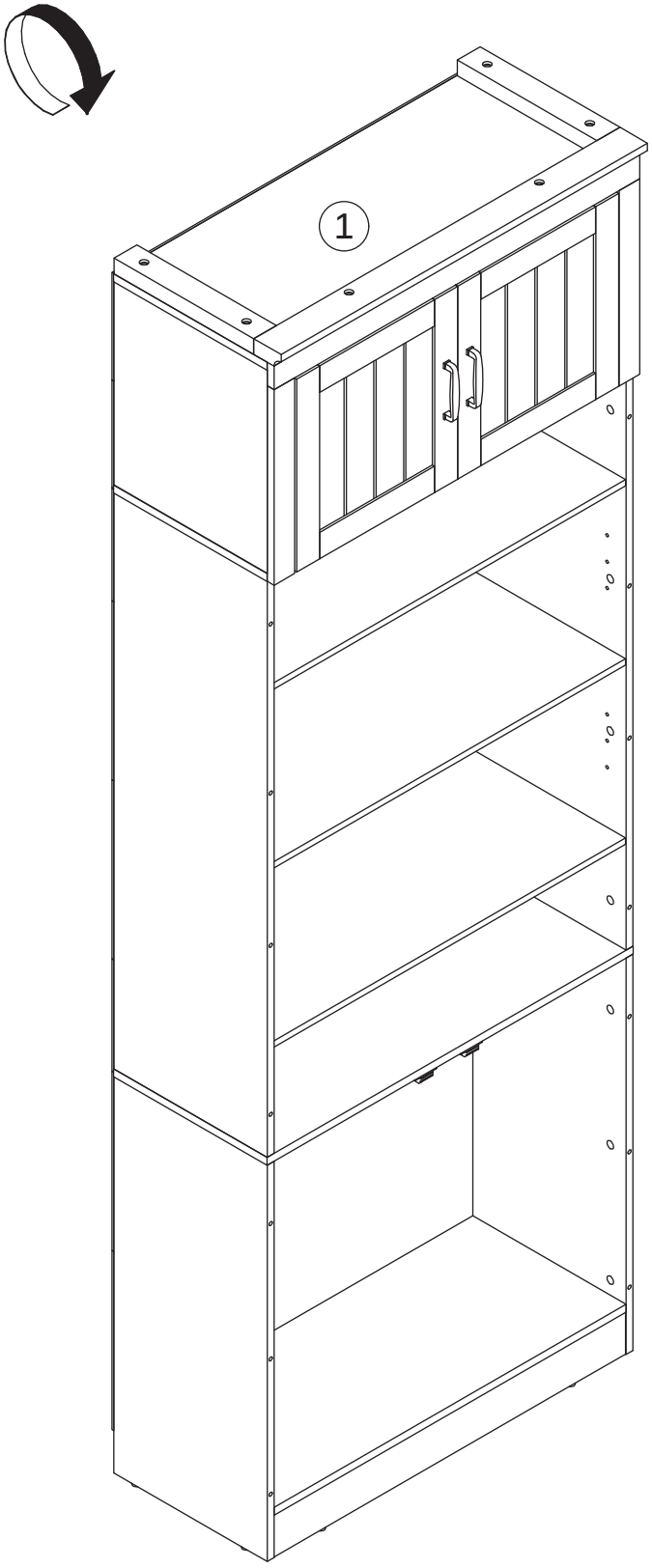

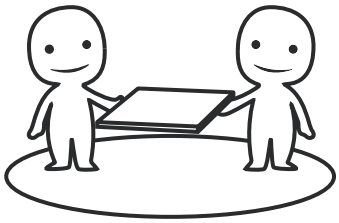

Need Two or More Adults to Complete

28

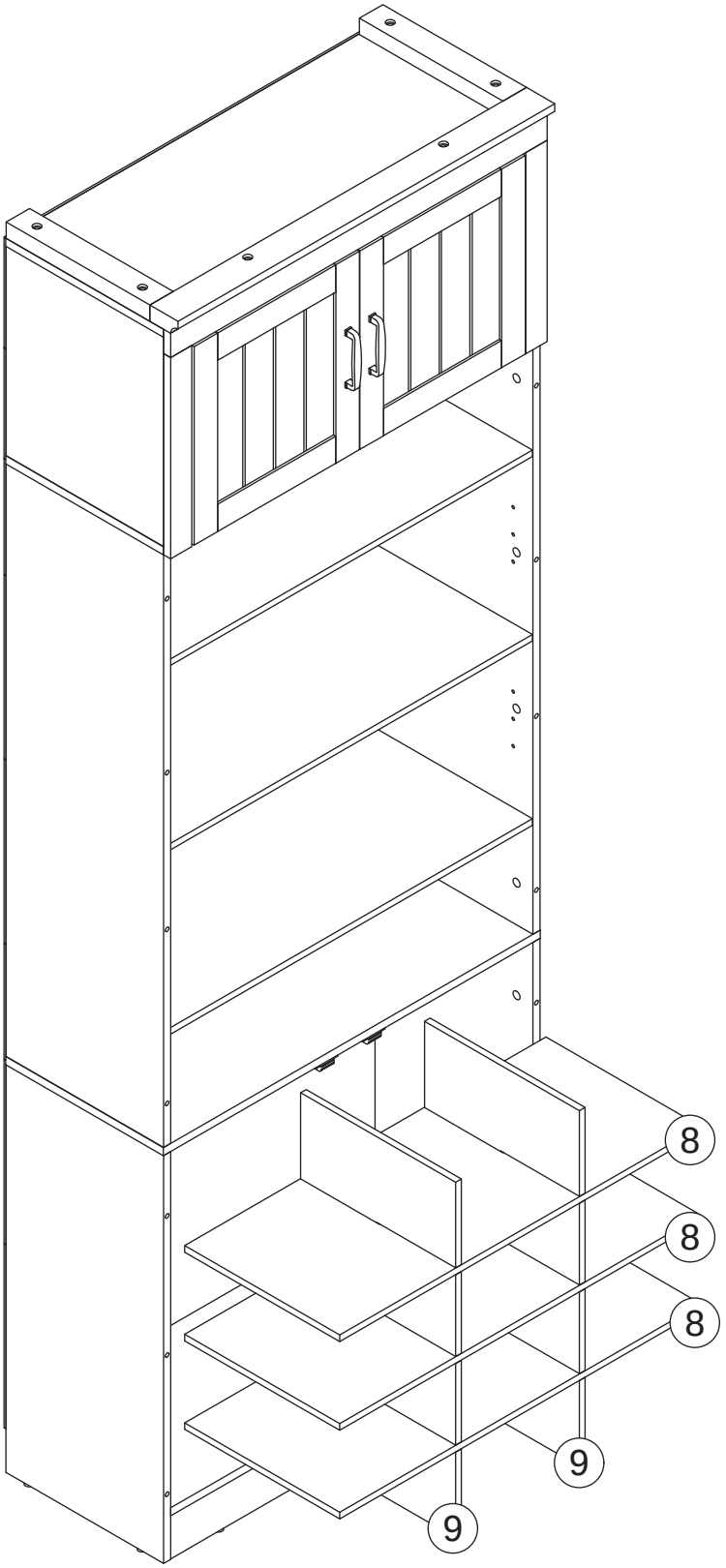

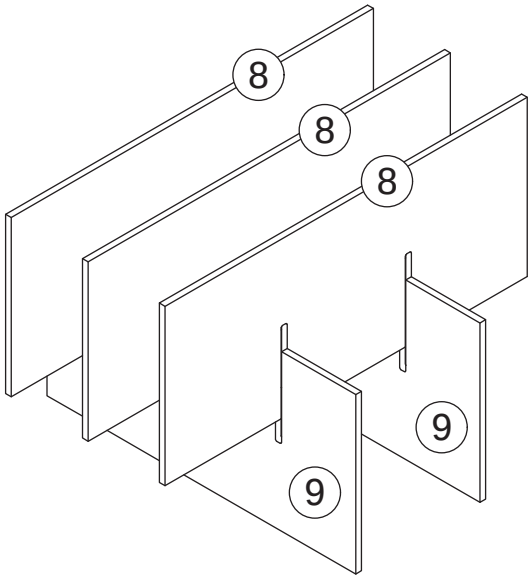

First, connect Part 8 to Part 9, then place it into the assembly unit.

29

N x 8



∅6 mm

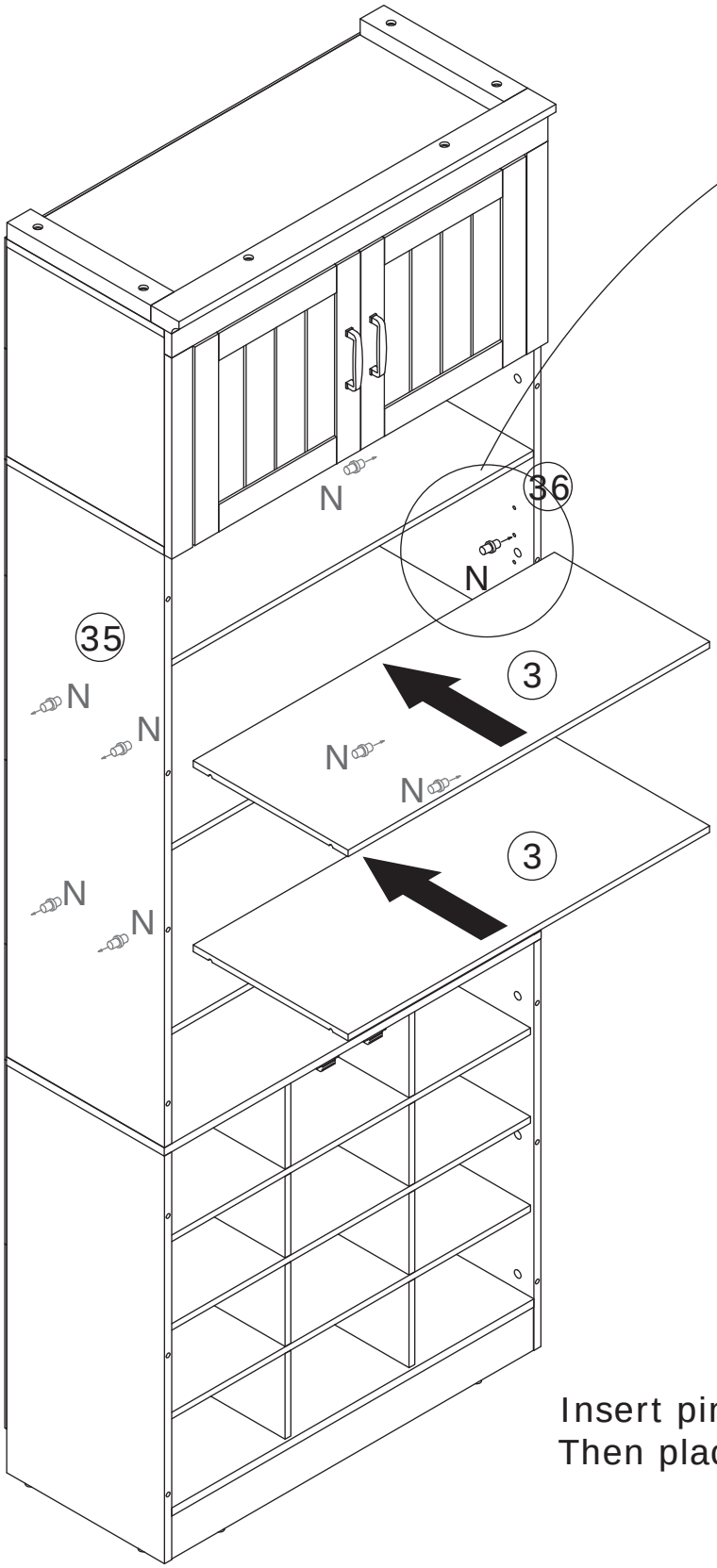

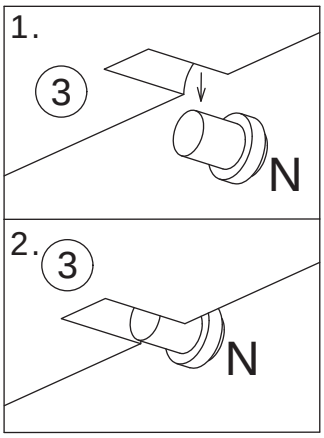

Insert pin (N) to Part 35 and 36.
Then place Part 3 on pins.

30

A x 8	E x 12	O x 6	
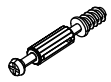			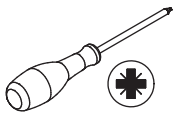
M5 x 42 mm	M3.5 x 14 mm	L60 x K48 mm	

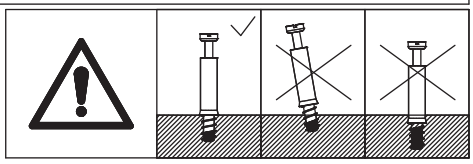

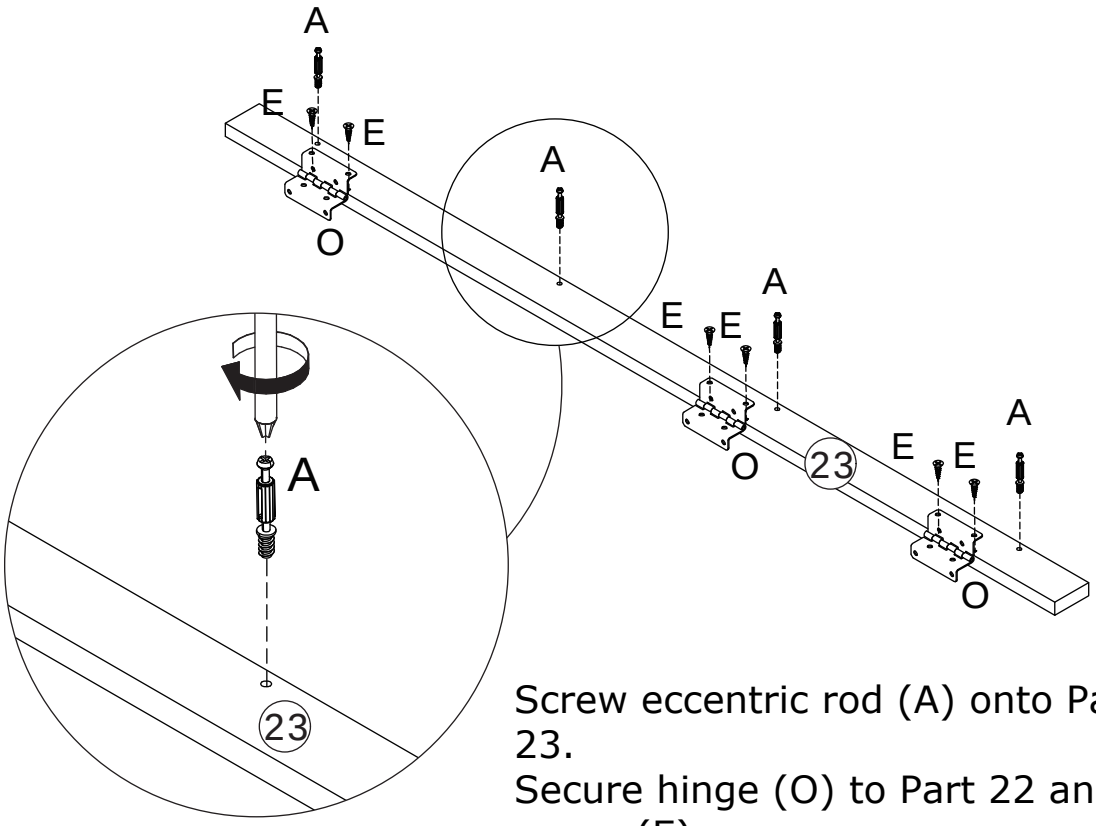

Screw eccentric rod (A) onto Part 22 and 23.
Secure hinge (O) to Part 22 and 23 using screw (E).

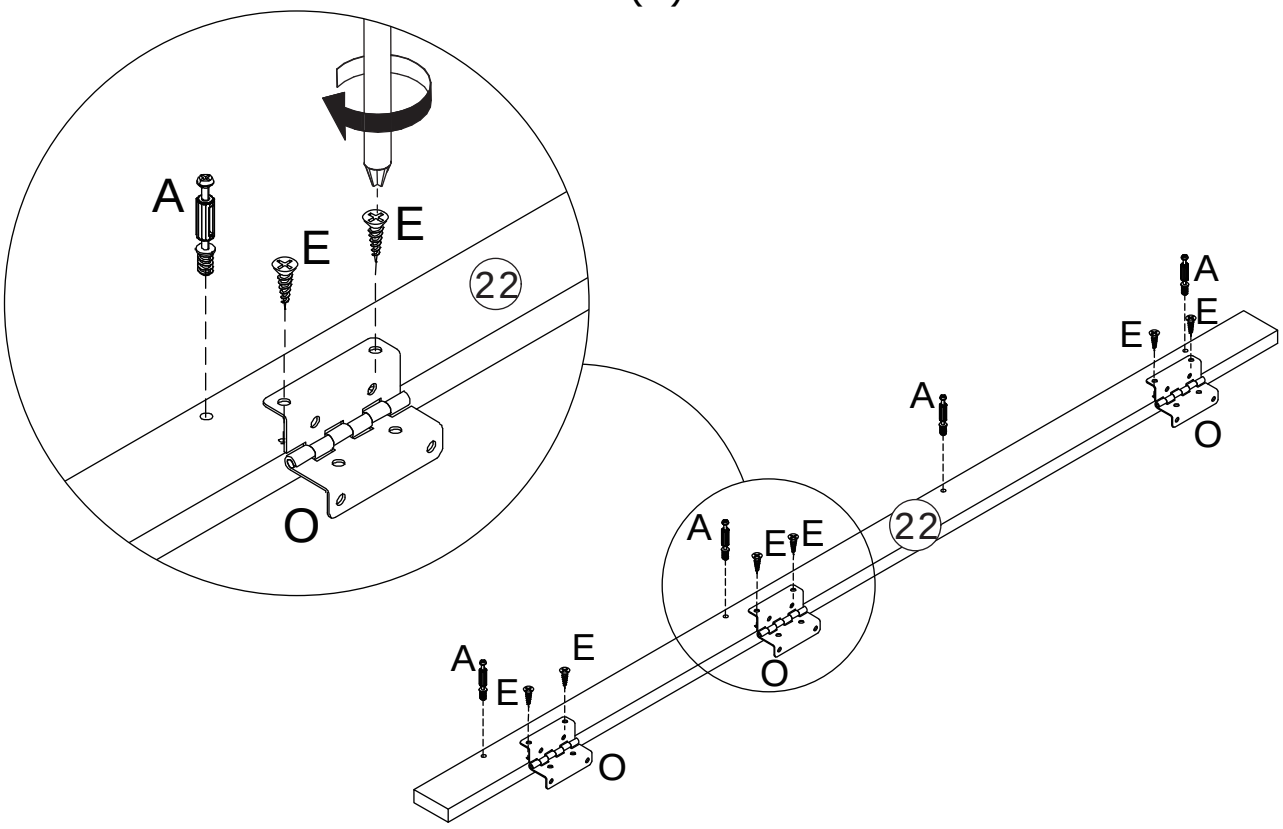

31

B x 8



∅15 x 10 mm

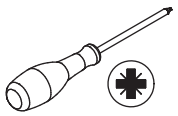

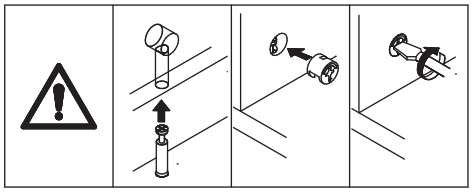

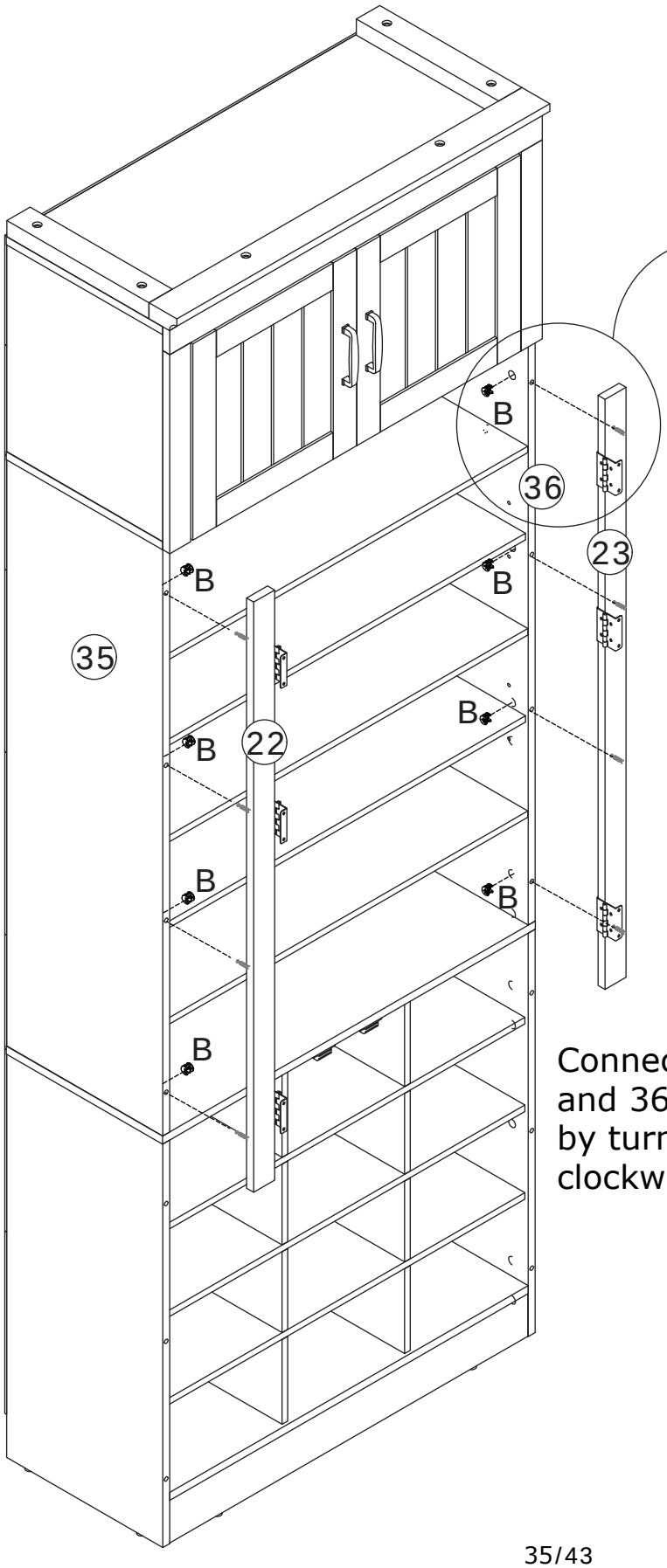

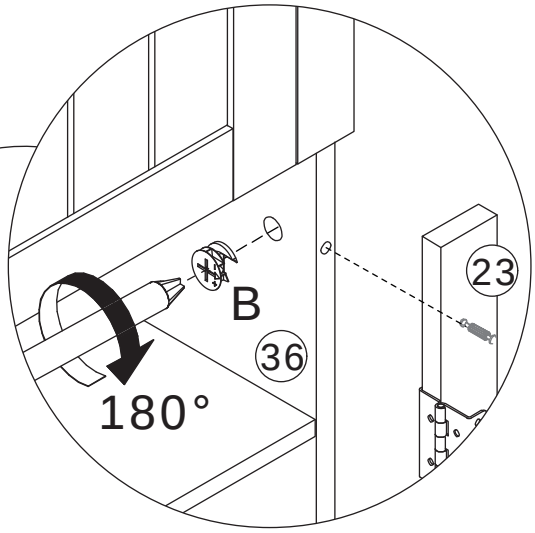

Connect Part 22 and 23 to Part 35 and 36, respectively, then tighten by turning eccentric wheel (B) clockwise.

32

A x 6	E x 8	O x 4	
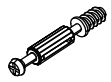			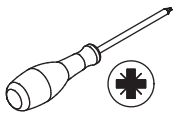
M5 x 42 mm	M3.5 x 14 mm	L60 x K48 mm	

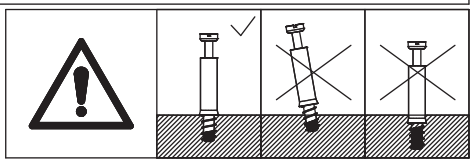

Screw eccentric rod (A) onto Part 24 and 25.

Secure hinge (O) to Part 24 and 25 using screw (E).

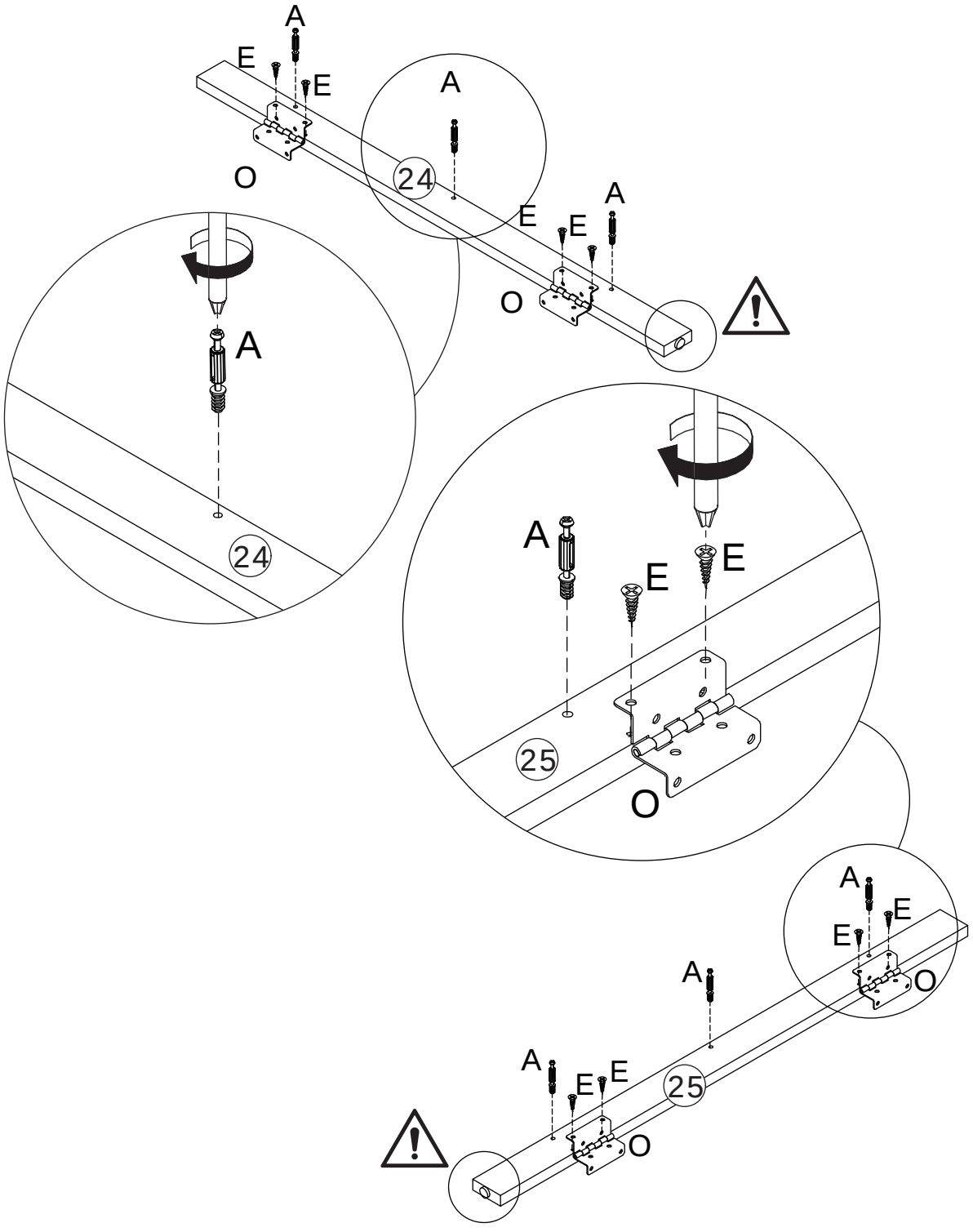

33

B x 6



∅15 x 10 mm

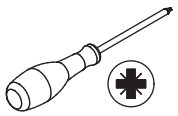

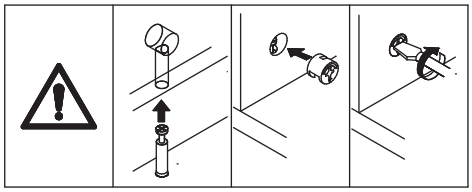

Connect Part 24 and 25 to Part 11 and 12, respectively, then tighten by turning eccentric wheel (B) clockwise.

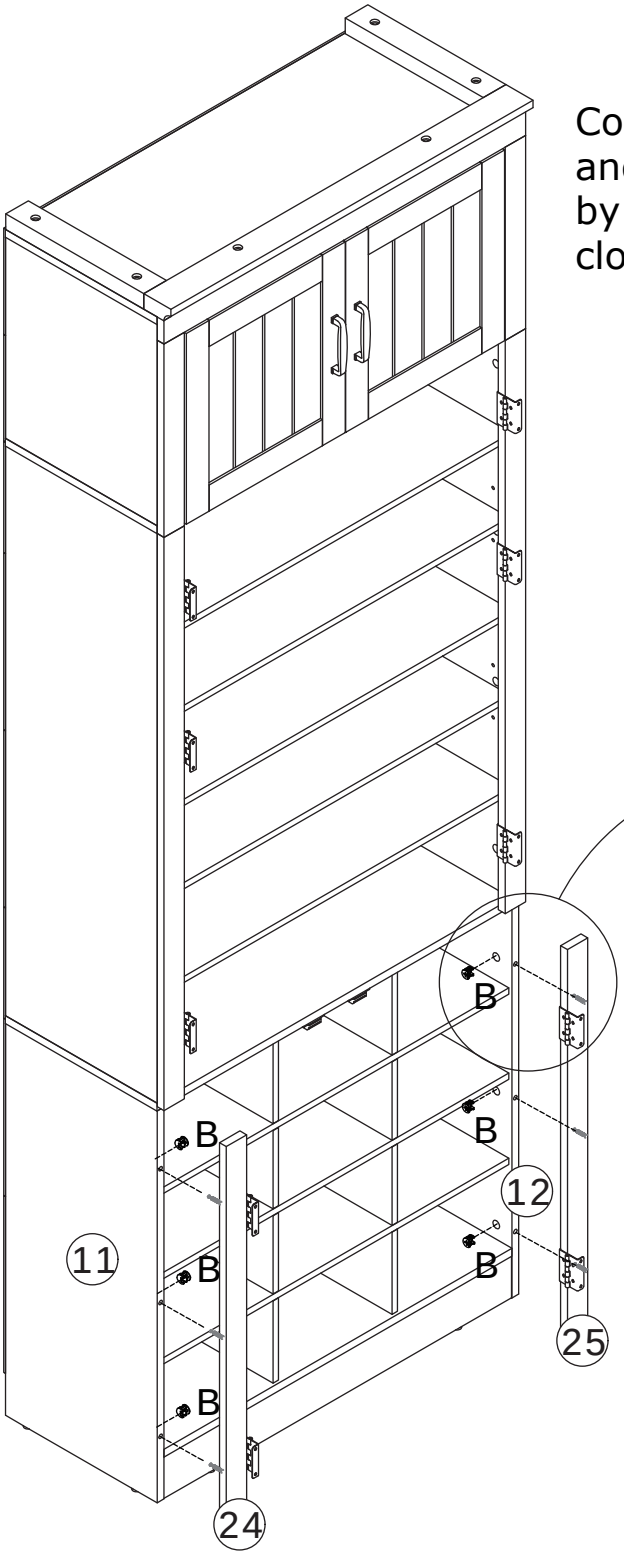

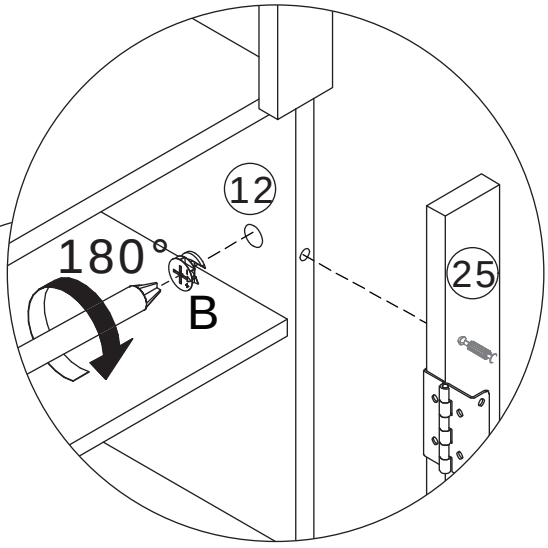

34

E x 4	F x 2	G x 4	J x 2	
M3.5 x 14 mm	111-96	M4 x 20 mm	∅4 x 63 mm	

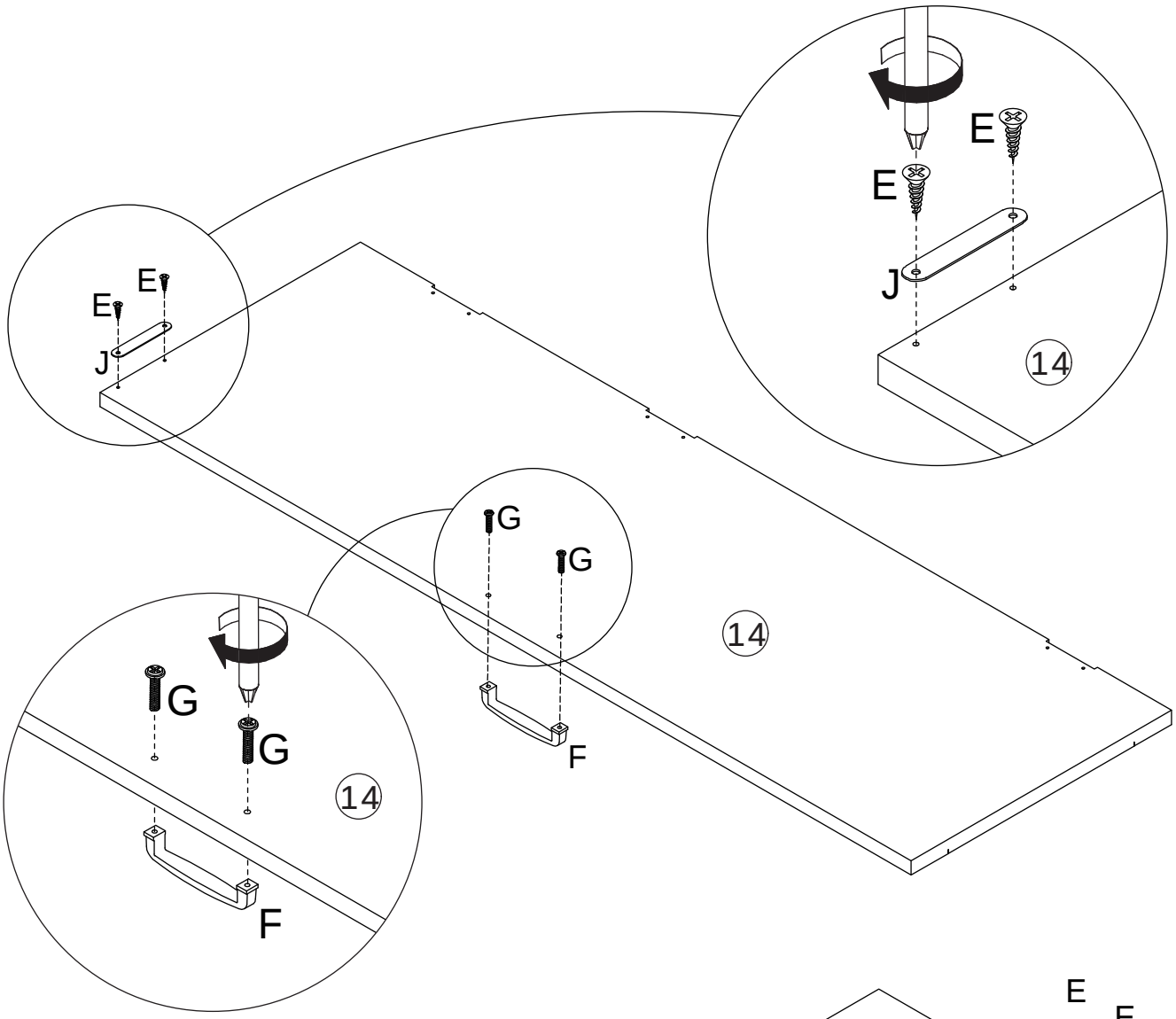

Secure iron sheet (J) to Part 14 and 15 using screw (E).
Secure handle (F) to Part 14 and 15 using screw (G).

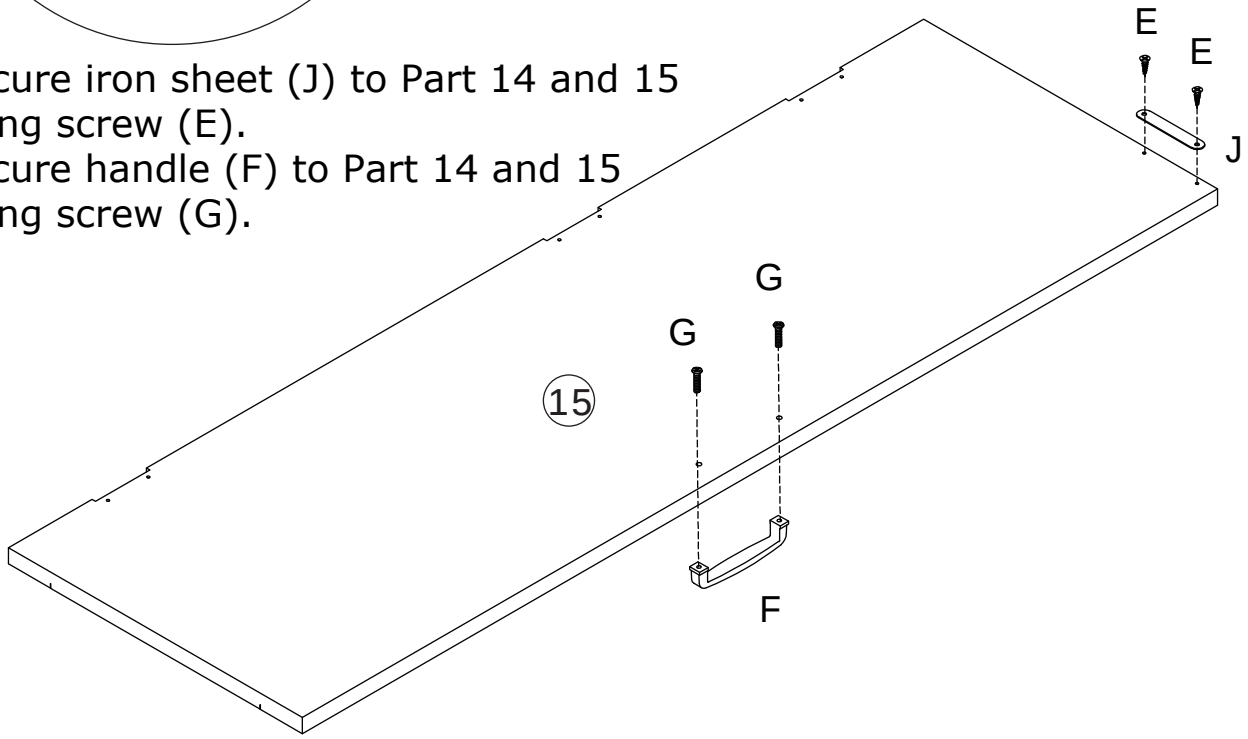

35

E x 24



M3.5 x 14 mm

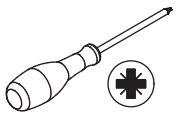

Secure Part 14 and 15 to Part 22 and 23, respectively, via the hinges using screw (E).

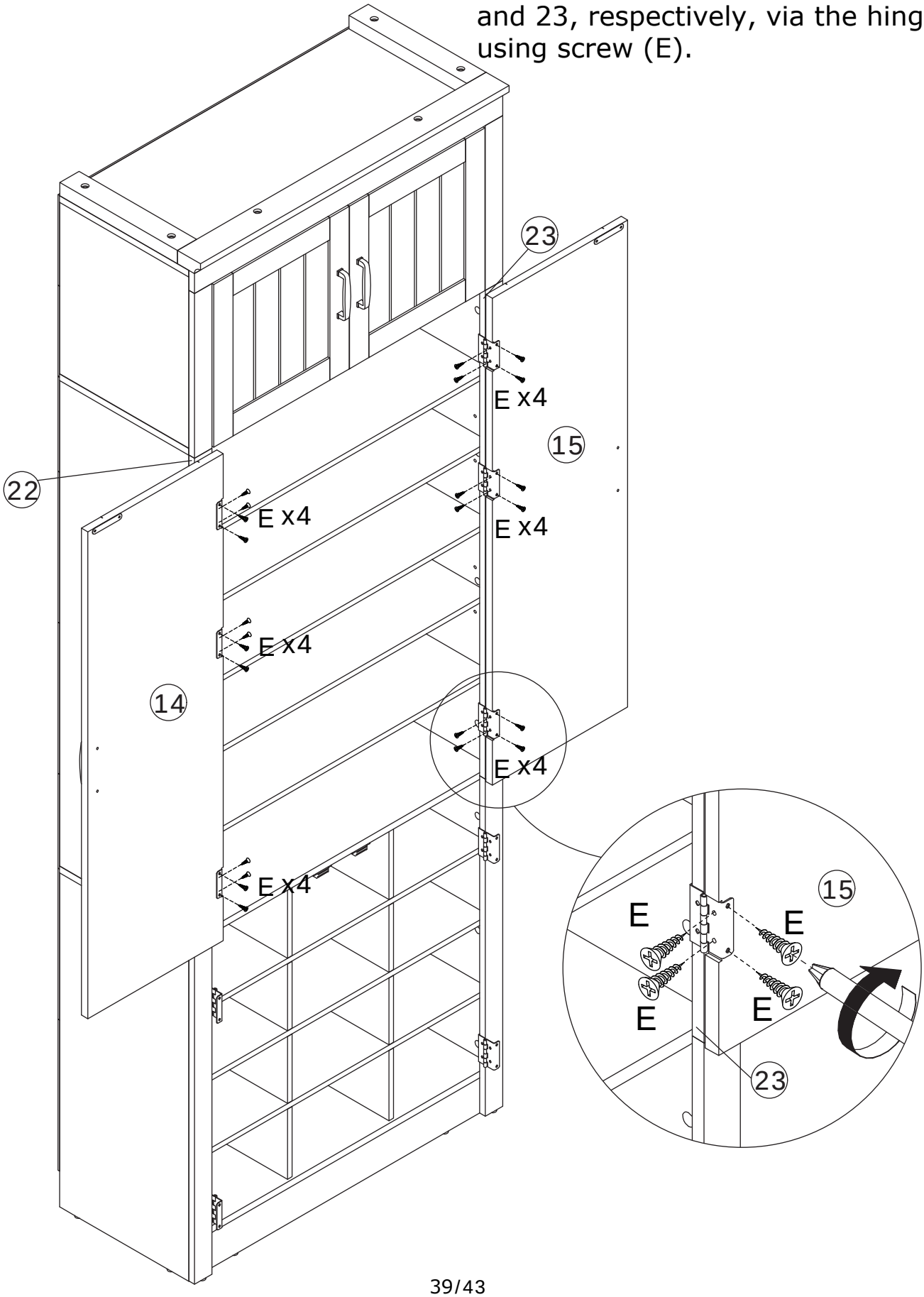

36

E x 4	F x 2	G x 4	J x 2	
				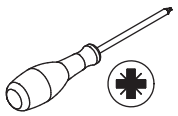
M3.5 x 14 mm	111-96	M4 x 20 mm	∅4 x 63 mm	

Secure iron sheet (J) to Part 16 and 17 using screw (E).
Secure handle (F) to Part 16 and 17 using screw (G).

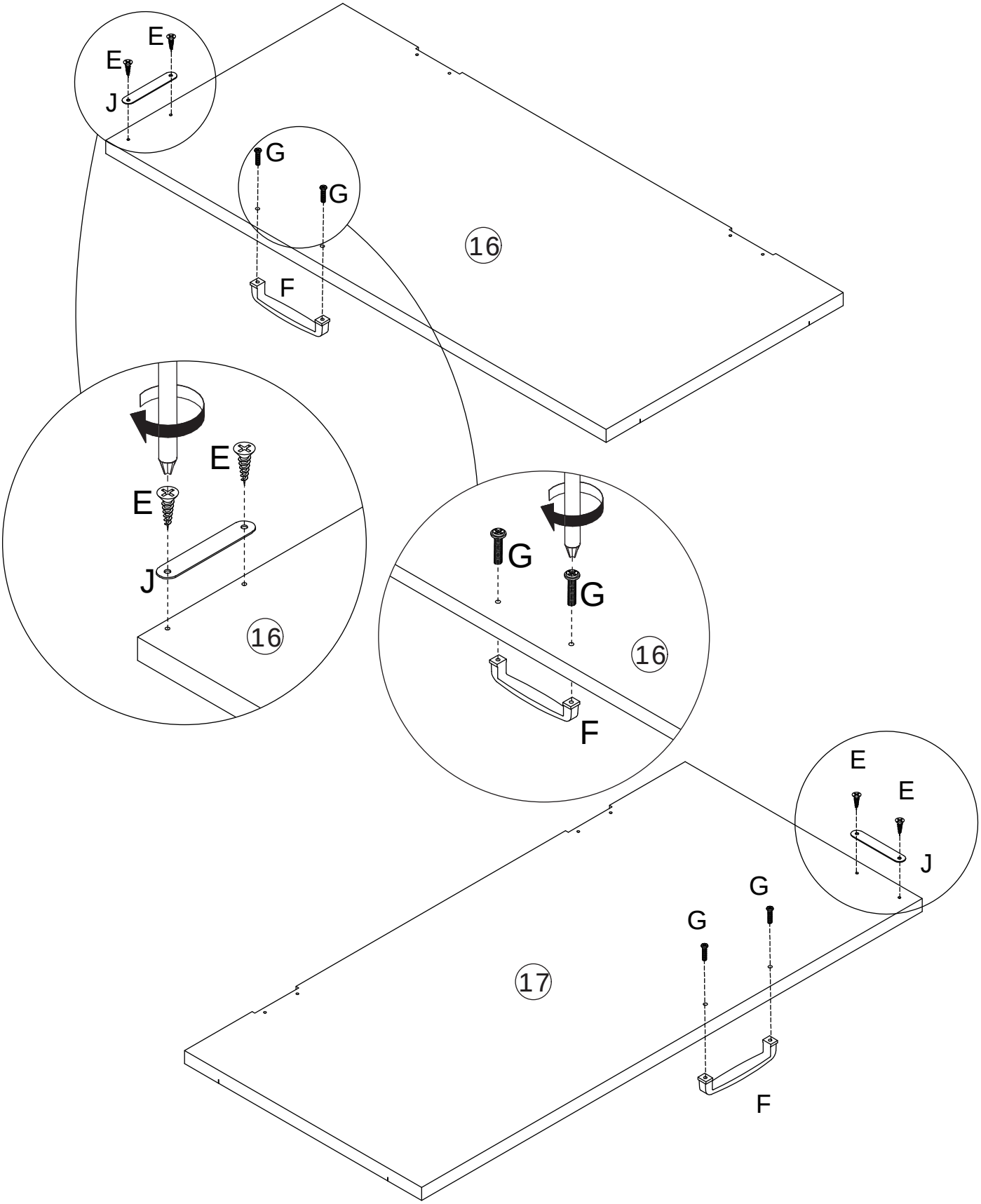

37

E x 16



M3.5 x 14 mm

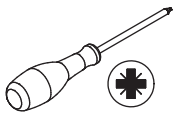

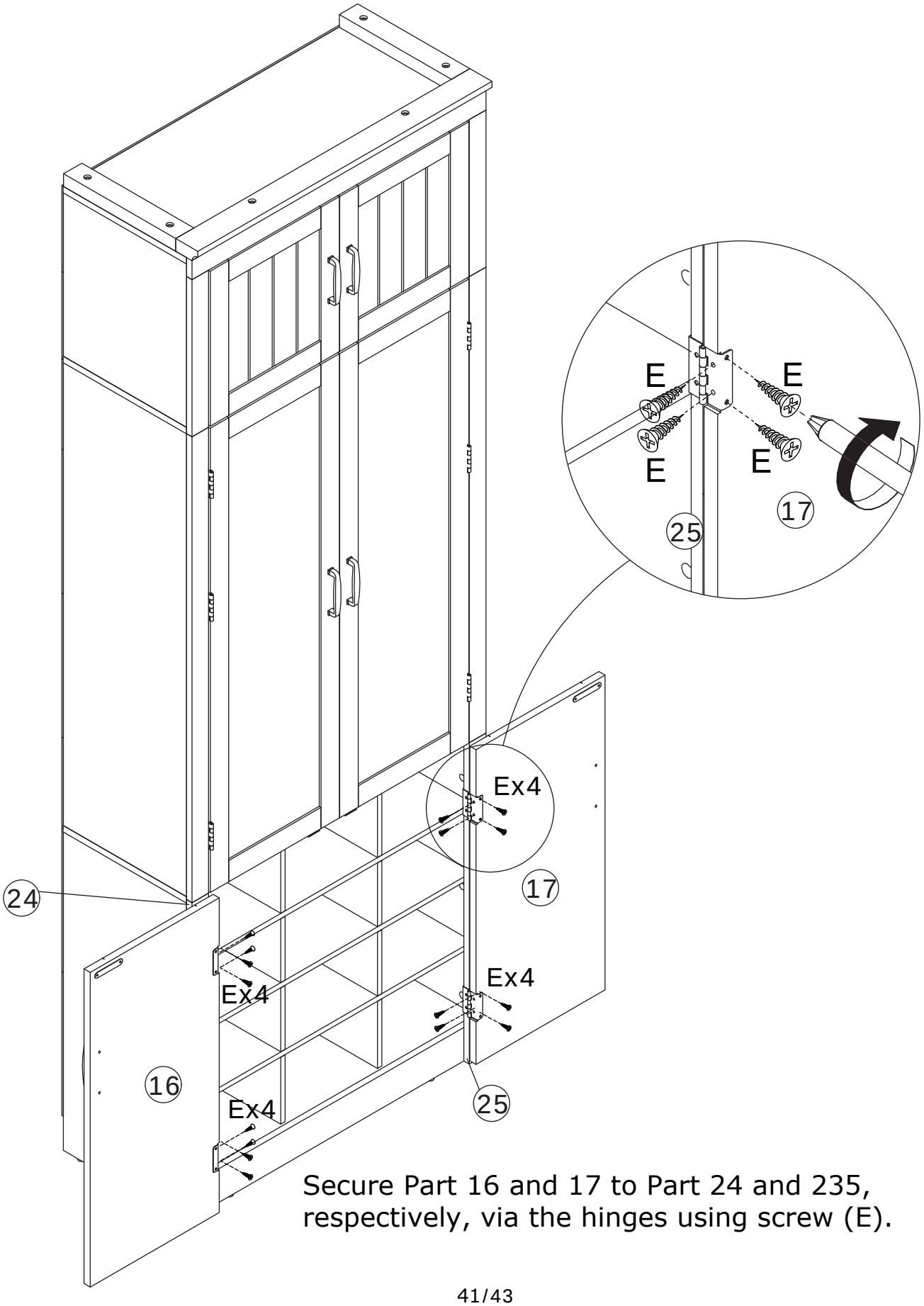

Secure Part 16 and 17 to Part 24 and 235, respectively, via the hinges using screw (E).

38

E x 16	P x 2	S x 2	
 M3.5 x 14 mm	Ø8 x 60 mm  Ø5 x 55 mm	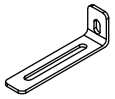	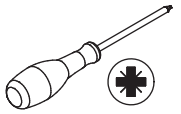

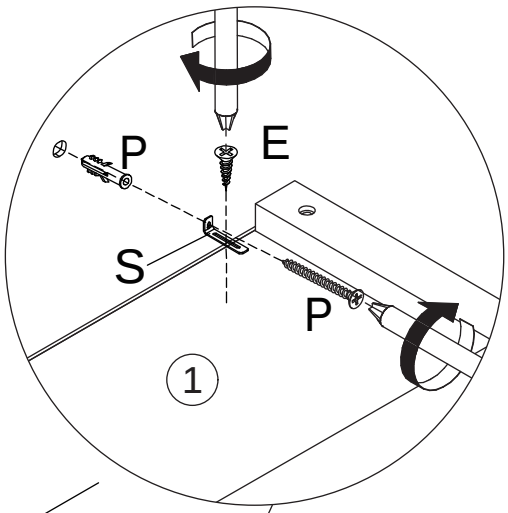

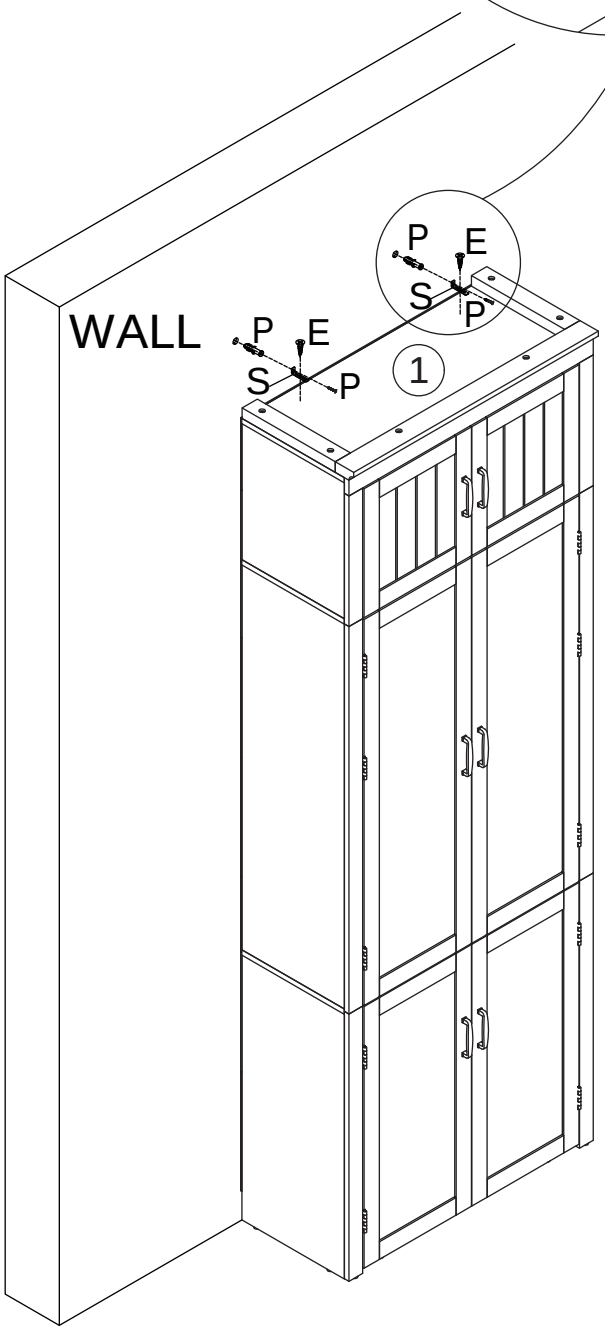

1.

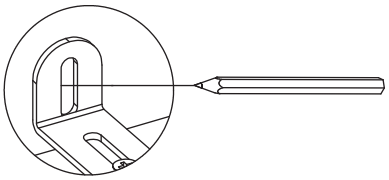

2.

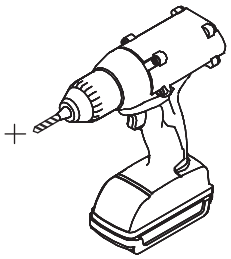

3.

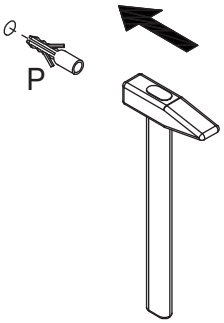

4.

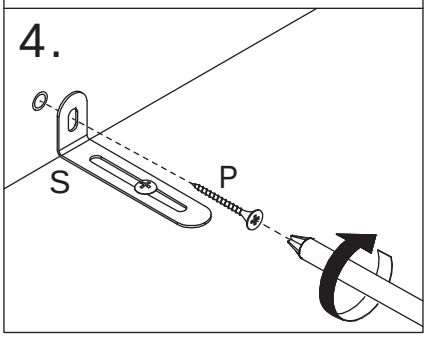

Install the anti-tip device as shown.

39

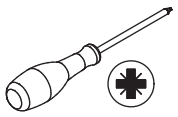

If the door panels are not aligned, please adjust the screws on the hinges according to the illustration.

Or you can search this link to view the teaching video.
https://youtu.be/n0Lb36SoODM

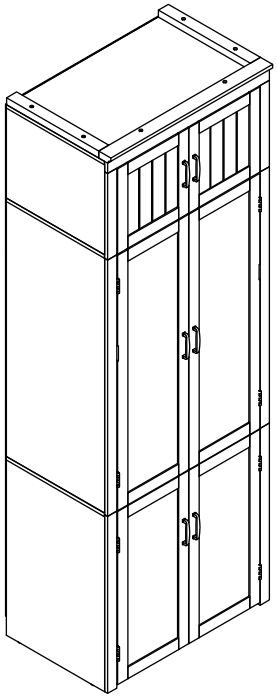

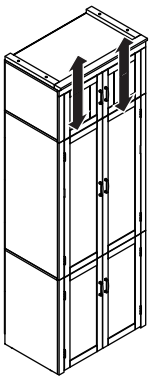

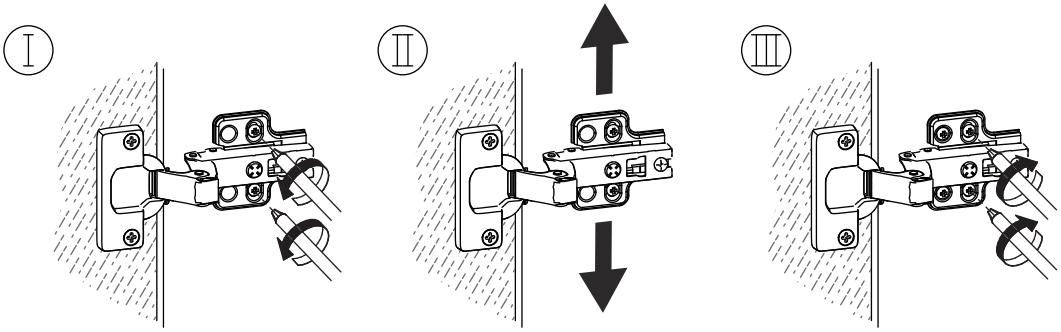

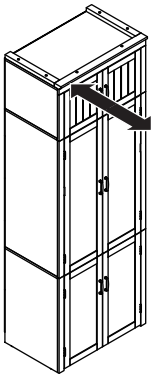

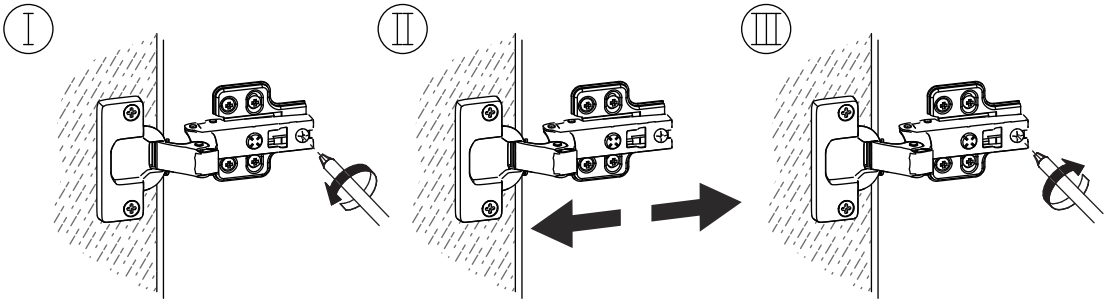

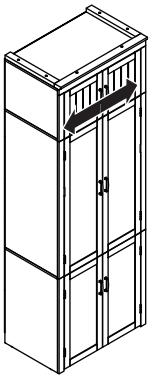

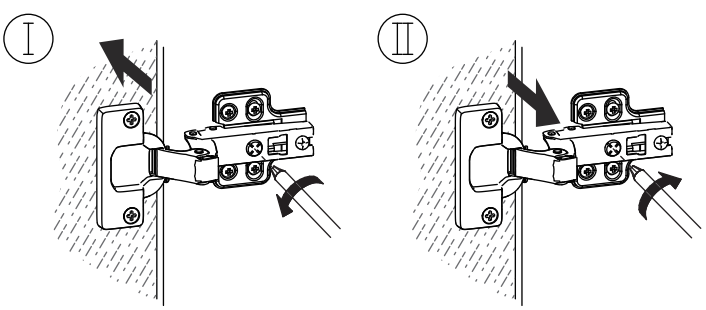

WARRANTY

WARRANTY CLAIMS

•There is a 30-day warranty for broken furniture or any other problems that do not work properly. The warranty will start from the date of purchase which must be verified by proof of purchase.

•Before making a claim, we may be able to answer your query, simply call us. Please leave your purchase order number, along with some details of the problem, if you want a replacement part. We will arrange within 48 hours. If there is out of stock, we will reply with a shipping date.

•The product must be used in accordance with the instructions provided. For health reasons.

•For other reasons, if the furniture needs to be returned, it must be cleaned and dried and operated within 30 days of receipt.

Type of Warranty Claim

•Failure to follow the furniture instructions will invalidate the warranty. Attention please.

•Does not include damage during installation, but includes damage during transportation.

Scope of responsibility

•Shall not bear any responsibility for misuse or user damage and / or loss of parts during the installation of furniture.

•After using, the damage and scratches of the furniture are not covered by the warranty.

The Warranty Relates to All Bought in The Us and Covers The Following Areas

•Sheet parts: 1 month from the date of purchase.

•Electrical parts: 1 month from the date of purchase.

RETURNS

CHANGED YOUR MIND AND NEED TO RETURN YOU ITEM?

PLEASE FOLLOW THE BELOW INSTRUCTIONS:

- If you have purchased and have simply changed your mind, follow the retailer's instructions for returns.

DEFECTIVE ITEMS

- If your item is defective in any way, i.e. it doesn't work but you can't identify why, in the first instance, please call us.

DAMAGED ITEMS

- If you receive an order with obvious shipping damage from the retailer, then we suggest the delivery is refused. If the delivery has been accepted and then shipping damage is found, please follow the specific instructions advised by the retailer.
  In all circumstances please save all packaging material and paperwork for the order.
  Please be aware that if you dispose of packaging material or attempt to return the merchandise without contacting the fulfiller, you jeopardise your chances of making a claim, and you may not receive a credit for the return.

AFTER-SALES CONTACT



