Archer® | K-1947-HLA

60" x 30" alcove heated whirlpool bath, left drain

Features

- Single-speed whirlpool offers performance and value with 8 fully adjustable jets
- Hydromassage flow and direction can be controlled at each jet
- Built-in heater
- Comfort Depth® offers a lower apron with generous soaking depth
- Integral lumbar support
- Slotted overflow allows for deep soaking
- Integral apron
- Integral flange helps prevent water from seeping behind wall and simplifies alcove installation
- Coordinates with other products in the Archer collection

Available Colors/Finishes

Color tiles intended for reference only.

	0	White
	96	Biscuit
	95	Ice Grey

1-800-4KOHLER (1-800-456-4537)
Kohler Co. reserves the right to make revisions without notice to product specifications.
For the most current specification sheet, go to www.kohler.com USA or www.kohler.ca Canada.
7-29-2026 21:09 - US-CA

Codes/Standards

ADA compliant when installed to the specific requirements of these regulations.

ADA

ASME A112.19.7/CSA B45.10
CSA B45.5/IAPMO Z124
UL 1795
CSA C22.2 No. 218.2
ADA
ICC/ANSI A117.1
UL Listed

Technical Information

All product dimensions are nominal.

Drain Location:	Left
Drain Hole Diameter:	2-1/4" (57 mm)
Minimum Flat for Door:	2-9/16" (66 mm)
Basin Area, Bottom:	45-1/8" x 19-11/16" (1146 mm x 500 mm)
Basin Area, Top:	52-1/8" x 22-1/16" (1324 mm x 560 mm)
Water Depth:	15-1/8" (384 mm)
Water Capacity:	57 gal (215.8 L)
Minimum Floor Load:	49 lbs/ft^2
Weight:	113 lbs (51.3 kg)

Material

- Acrylic

Recommended Products/Accessories

K-23726 Drain treatment

K-23732 Tub & shower cleaner

Required Products/Accessories

- K-7271 Slotted overflow brass bath drain

or

- K-7272 Slotted overflow bath drain

Required Electrical Service

Two dedicated circuits required, protected with Class A Ground-Fault Circuit-Interrupter (GFCI). Outside North America, this device may be known as a Residual Current Device (RCD).

Pump:	120 V, 15 A, 60 Hz
Heater:	120 V, 15 A, 60 Hz

Electrical Component Ratings

Pump:	120 V, 7 A, 60 Hz
Number of Speeds:	Single
Heater:	120 V, 12.5 A, 60 Hz, 1500 W

Warranty

See website for detailed warranty information.

KOHLER® Plastic Baths and Shower Bases Lifetime Limited Warranty|KOHLER® Hydrotherapy Components Five-Year Limited Warranty

1-800-4KOHLER (1-800-456-4537)
Kohler Co. reserves the right to make revisions without notice to product specifications.
For the most current specification sheet, go to www.kohler.com USA or www.kohler.ca Canada.
7-29-2026 21:09 - US-CA

THE BOLD LOOK OF KOHLER

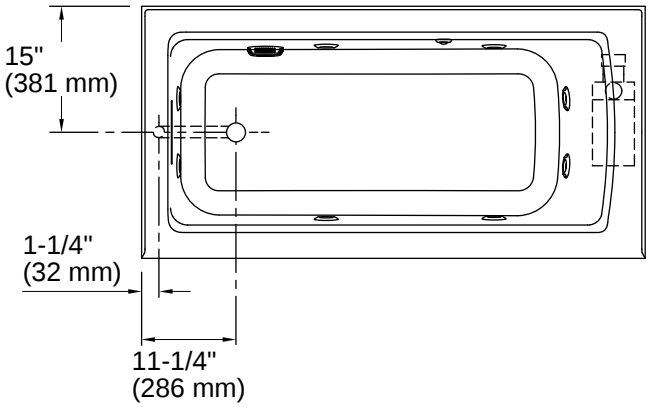

No change in measurements if connected with drain illustrated. (K-7272)

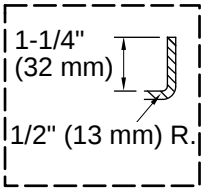

Integral Flange Detail

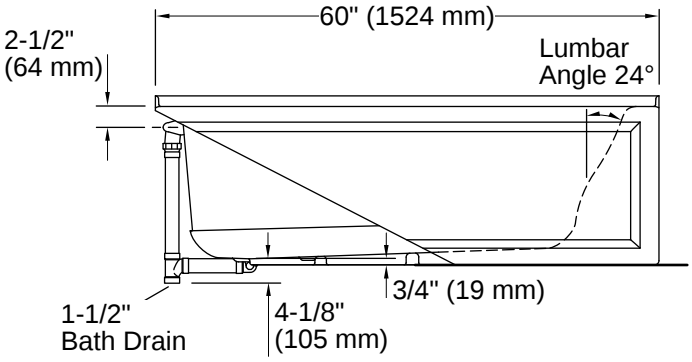

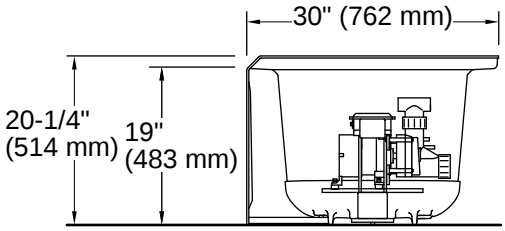

Installation

- Left drain
- Alcove
- Requires Clearflo slotted overflow bath drain (sold separately)

Installation Notes

Install this product according to the installation instructions.

Measure your actual product for rough-in details.
The hot water supply should be 70% of the capacity of the bath or greater. Installations will vary.
ADA compliant when installed to the specific requirements of these regulations.

1-800-4KOHLER (1-800-456-4537)
Kohler Co. reserves the right to make revisions without notice to product specifications.
For the most current specification sheet, go to www.kohler.com USA or www.kohler.ca Canada.
7-29-2026 21:09 - US-CA

THE BOLD LOOK OF KOHLER