If you have any questions, please feel free to contact us.
Email: hdteam@aminalife.com

ASSEMBLY INSTRUCTIONS

WARNING

CSU

This product is NOT a Clothing Storage Unit (CSU).
Do NOT use it for clothing storage.
Improper use may cause furniture tipover.

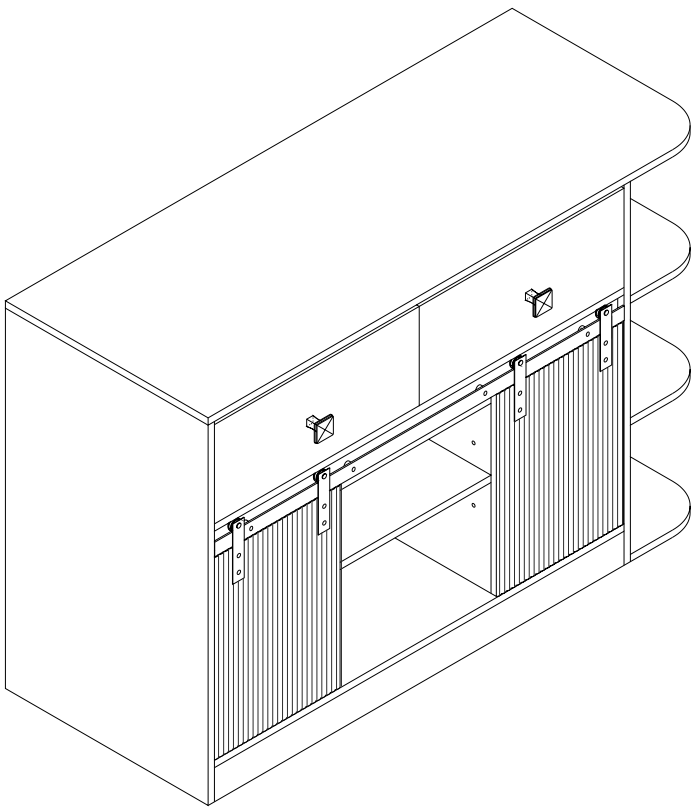

NOTE: 50% TIGHTEN BEFORE FIXING ALL BOLTS

N704P444755+N704P444756

Thank you for choosing our products.

1. Return Polic



DO NOT RETURN TO THE STORE! Skip the process of returning your product and contact us directly for a replacement

If you find that parts of your order are missing or damaged, we will gladly ship any needed replacement parts free of charge.

If you have found any sort of defect, please contact our customer service department and let us know the details of your order and any issues encountered, we will try our best to provide you with a solution.

Recommendations Before Beginning Assembly

- Read instructions, cover to cover
- Have 2-4 adults on hand for assembly depending on product size
- Do not assemble directly on flooring or carpet
- Assemble on a clean non-marring surface (example: packing foam)
- Save all packaging until finished

3. Assembly Notice:

- If you encounter any problems during assembly and find that you cannot continue, rest assured we will help you solve the situation as soon as possible. Simply keep all of the parts of the product stored in a safe place and contact us immediately so we may assist you further.
- Once you have opened your package, remove all inner hardware packages and take the parts out. One by one, Place the parts out neatly in front of you, then refer to the instructions to ensure no parts are missing. If any pieces are found missing, please carefully look in the box first, as the hardware packaging might have torn making the hardware spill in the box.
- Some key parts of your product may be stored and hidden inside of other parts. Please open any zippered or hook & loop storage compartments to remove all parts. (example: cushions and legs being stored in the underside of a sofa)
- IMPORTANT: When setting up your product, DO NOT INSTALL THE SCREWS ALL THE WAYIN THE BEGINNING. Place each screw into their proper hole and use your hand to twist the screw halfway. Twist all the screws in halfway to ensure the holes will match up properly and the product is level on the ground. When everything seems fitted, then tighten the screws.
- When you have completed assembly, we suggest you have more than one person to assist you with lifting and placing the product.

Care & Maintenance

- Do not put hot items directly on furniture surface
- Do not clean furniture with harsh cleansers or polish
- Do not place furniture under direct sunlight
- Do not place furniture near heating or cooling vents
- Do not write on furniture without a padded barrier to protect the surface
- Do not place furniture outside. For indoor use only
- Not for commercial use. For residential use only
- Stains may be removed with mild soap solution and damp cloth
- Children should not climb or jump on the furniture
- Dust and pick-up spills using a clean, non-colored, lint-free cloth

Caution

- This product contains small components. Please ensure that they are kept away from small children.
- Do not use power tools to assemble your furniture. Power tools may strip or damage the parts.

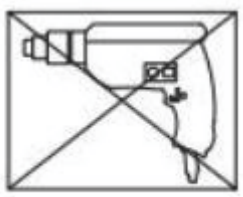

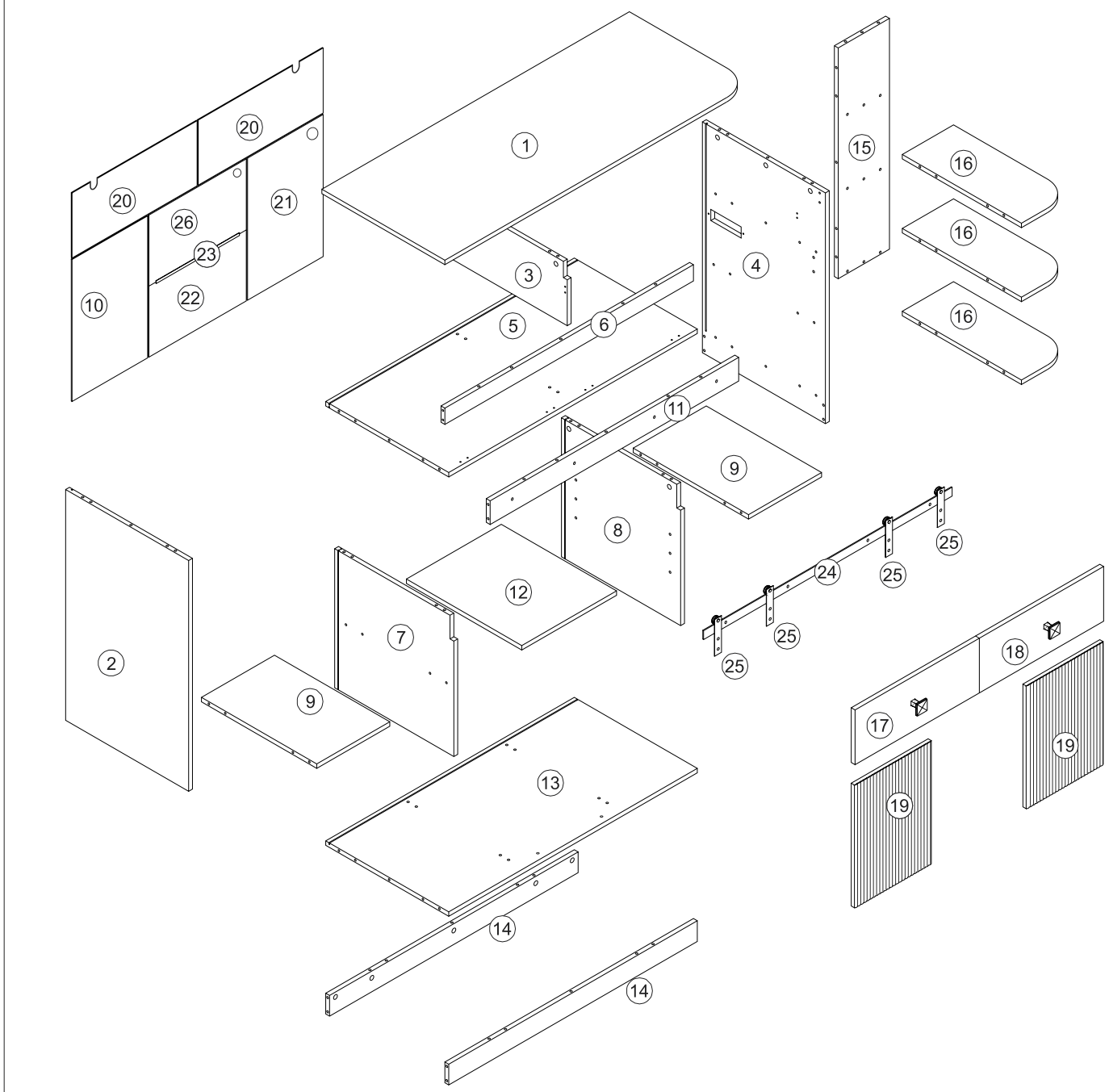
1
2
3
4
5
6
7
8
9
9
10
11
12
13
14
14
15
16
16
16
17
18
19
19
20
20
21
22
23
24
25
25
25
25
26

N704P444755-BOX 1/2

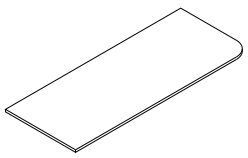 ①X1	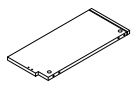 ③X1	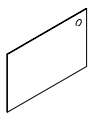 ㉖X1
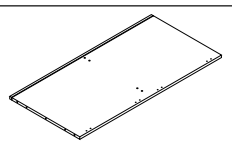 ⑤X1	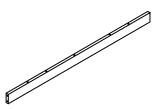 ⑥X1	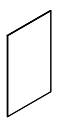 ⑩X1
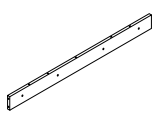 ⑪X1	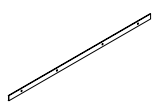 ㉔X1	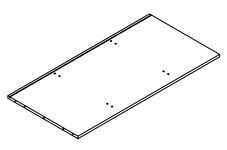 ⑬X1
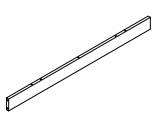 ⑭X2	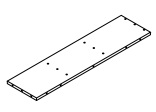 ⑮X1	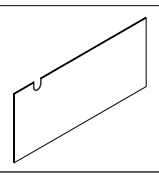 ⑳X2
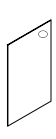 ㉑X1	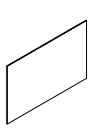 ㉒X1	㉓X1

N704P444756-BOX 2/2

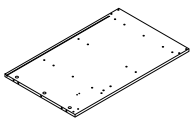 ②X1	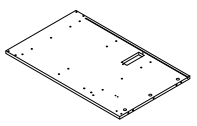 ④X1	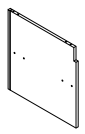 ⑦X1
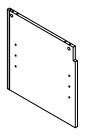 ⑧X1	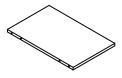 ⑨X2	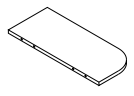 ⑯X3
 ⑰X1	 ⑱X1	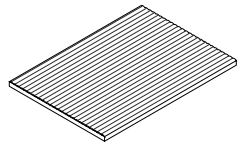 ⑲X2
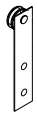 ㉕X4	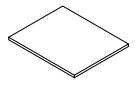 ⑫X1	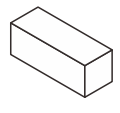 X1

N704P444756-BOX:2

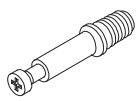 6*35mm	 15*10mm	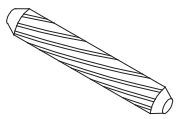 6*30mm	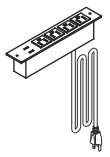	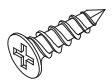 3*12mm
Ax70 PCS	Bx70 PCS	Cx60PCS	Dx1PC	Ex26PCS
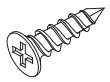 3*12mm		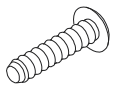 4*16mm	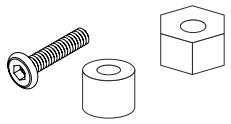	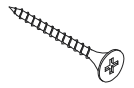 4*40mm
Fx2PCS	Gx2PCS	Hx2PCS	Ix4PCS	Jx10PCS
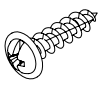 2.5*10mm	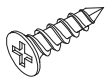 3*14mm	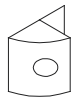	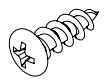 4*16mm	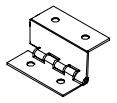
Kx3PCS	Lx24PCS	Mx20PCS	Nx 8PCS	Ox4PCS
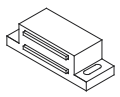	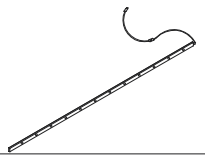		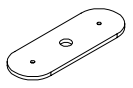	
Px2PCS	Qx1PC	Rx6PCS	Sx2PCS	Tx2PCS
	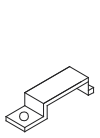		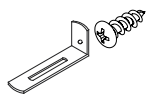 4*12mm	
Ux2PCS	Vx3PCS	Wx4PCS	Xx2PCS	

STEP 1

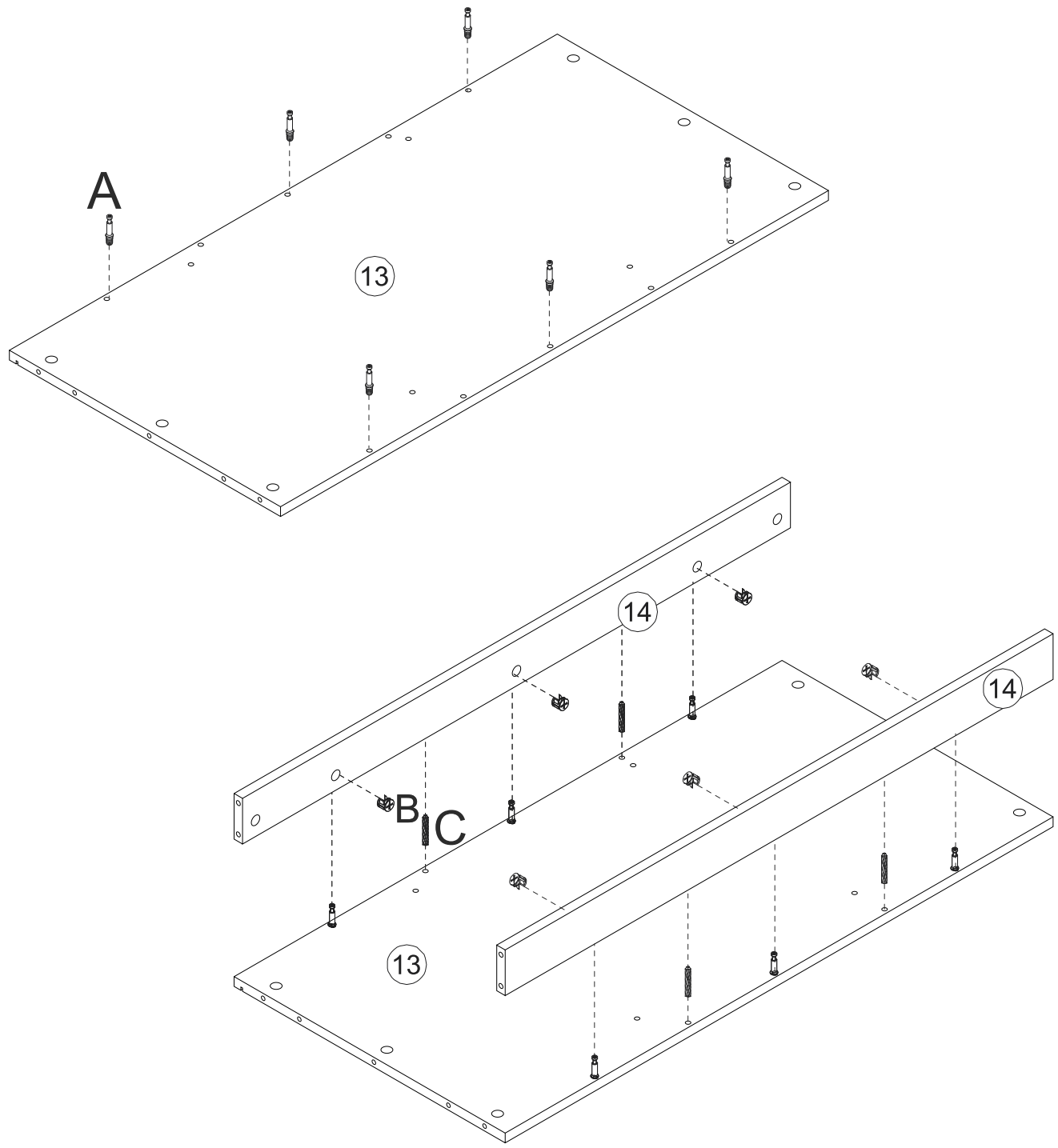

		
Ax6pcs	Bx 6pcs	Cx4pcs

STEP 2

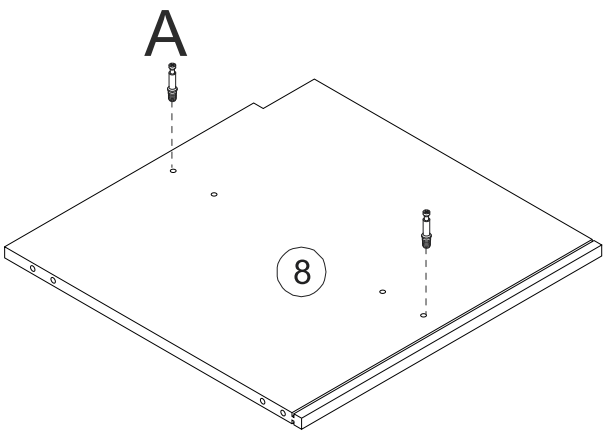

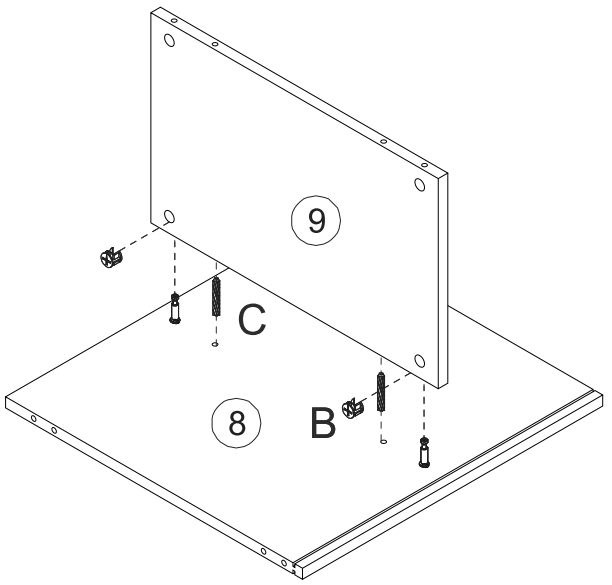

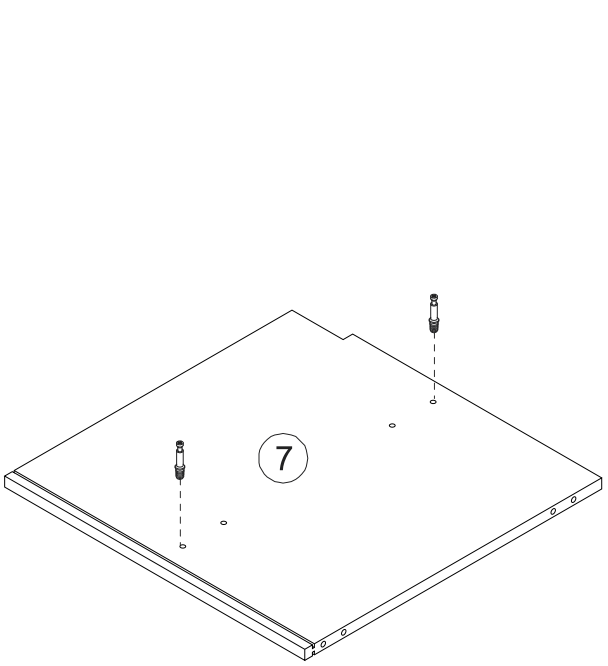

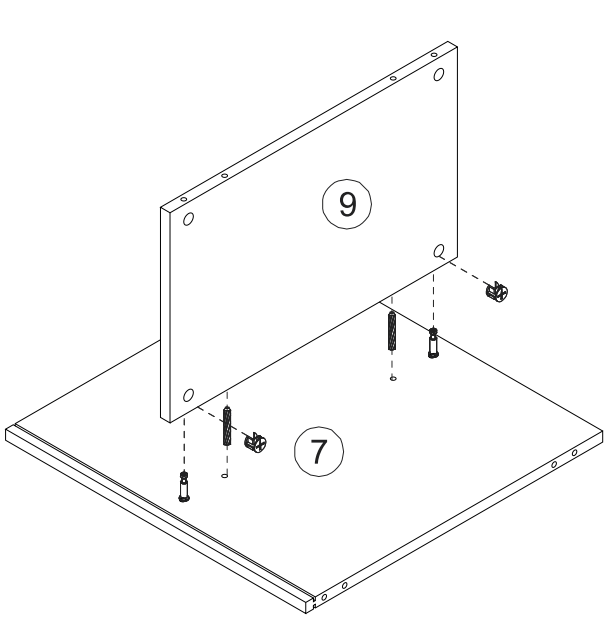

Ax 4pcs	Bx 4pcs	Cx4pcs

STEP 3

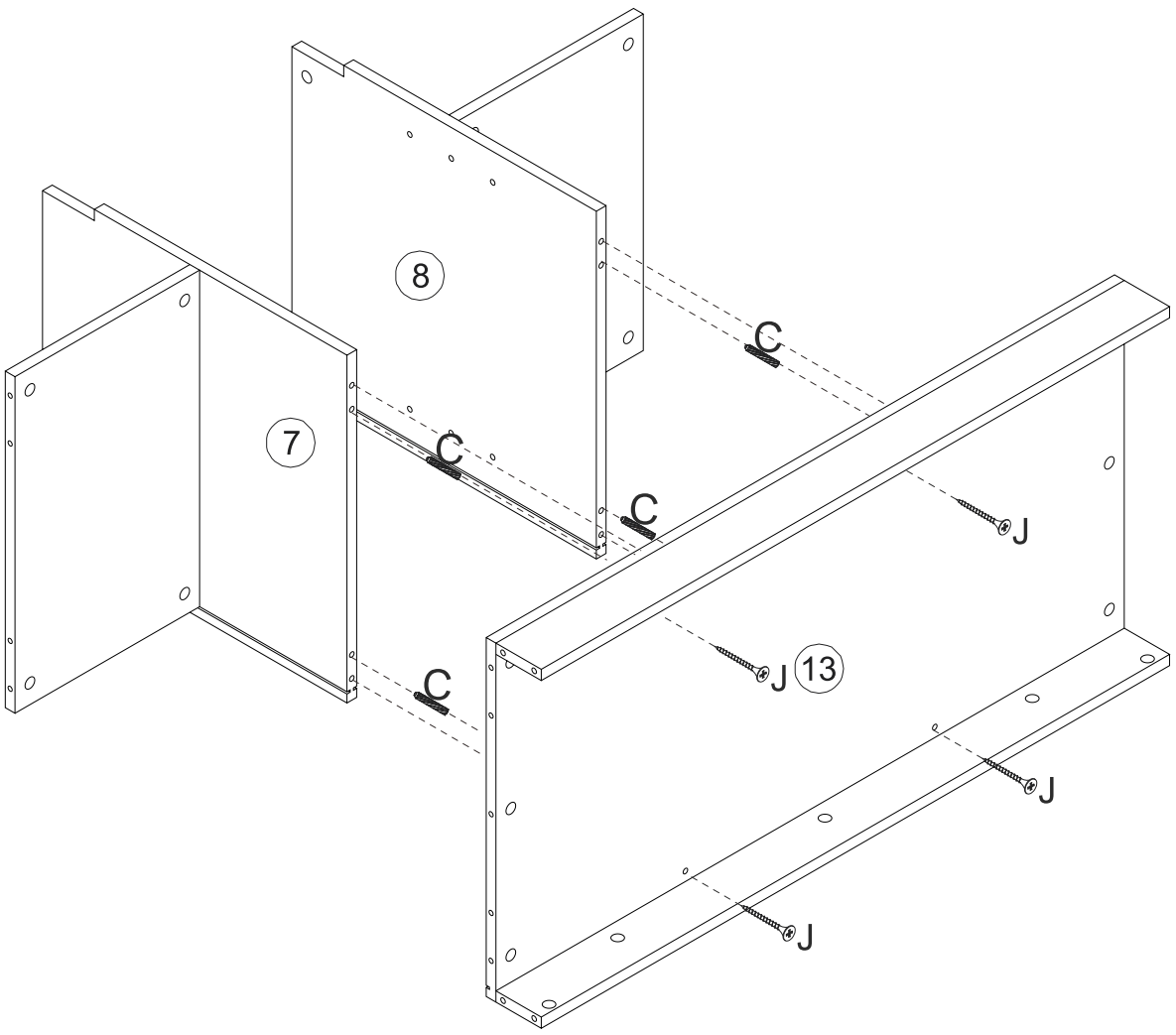

Cx 4pcs	Jx 4pcs

STEP 4

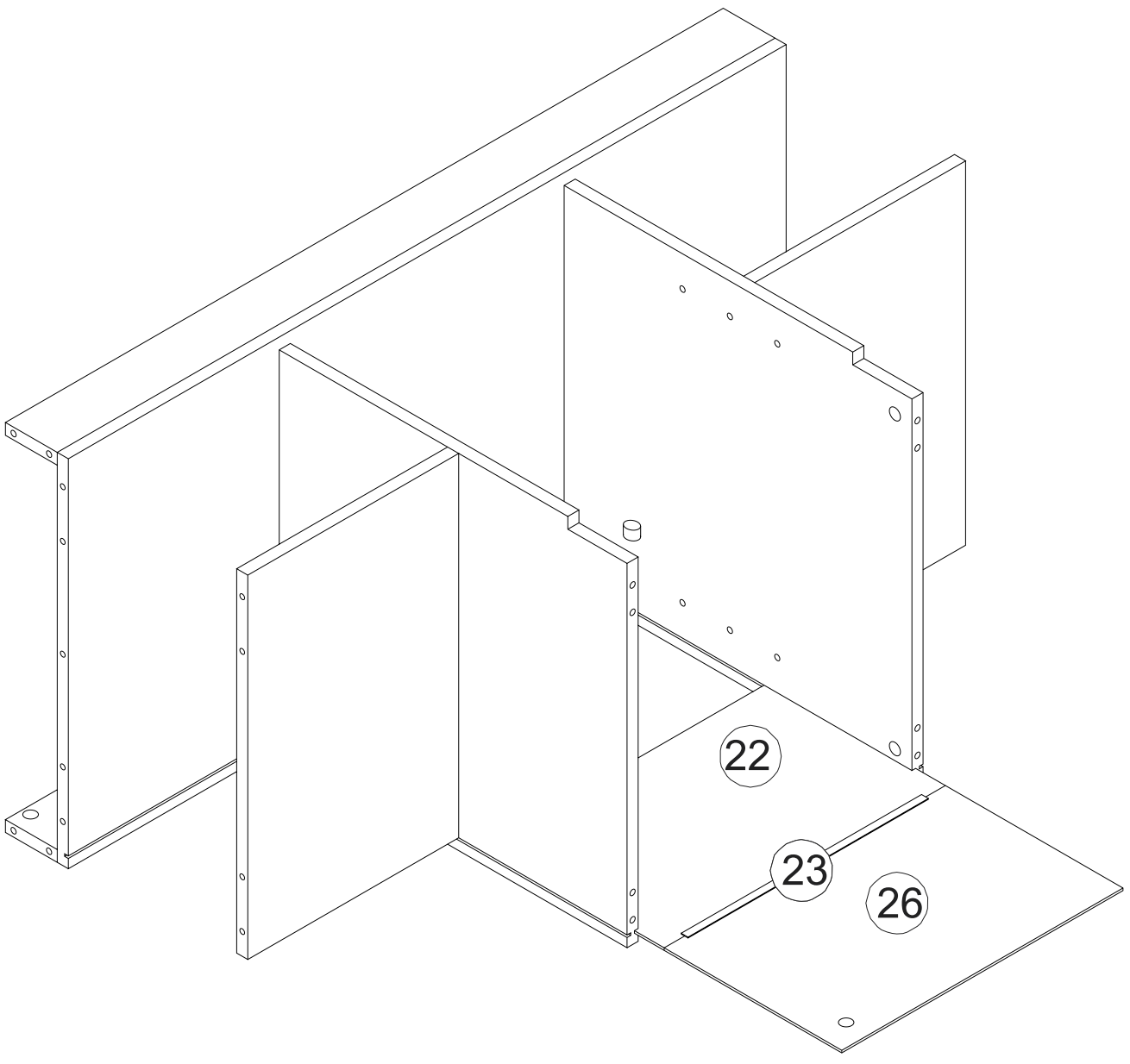

STEP 5

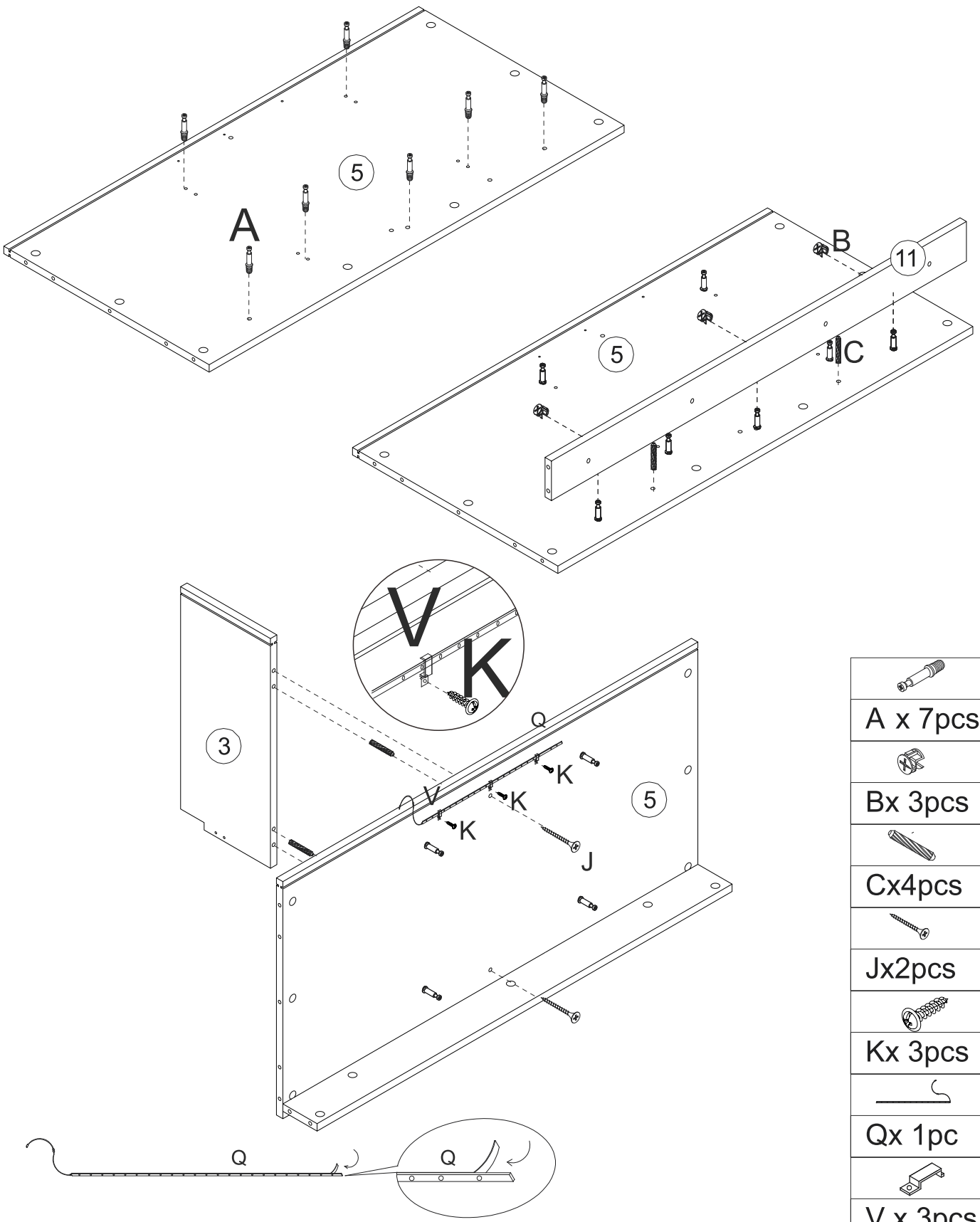

A x 7pcs

Bx 3pcs

Cx4pcs

Jx2pcs

Kx 3pcs

Qx 1pc

V x 3pcs

STEP 6

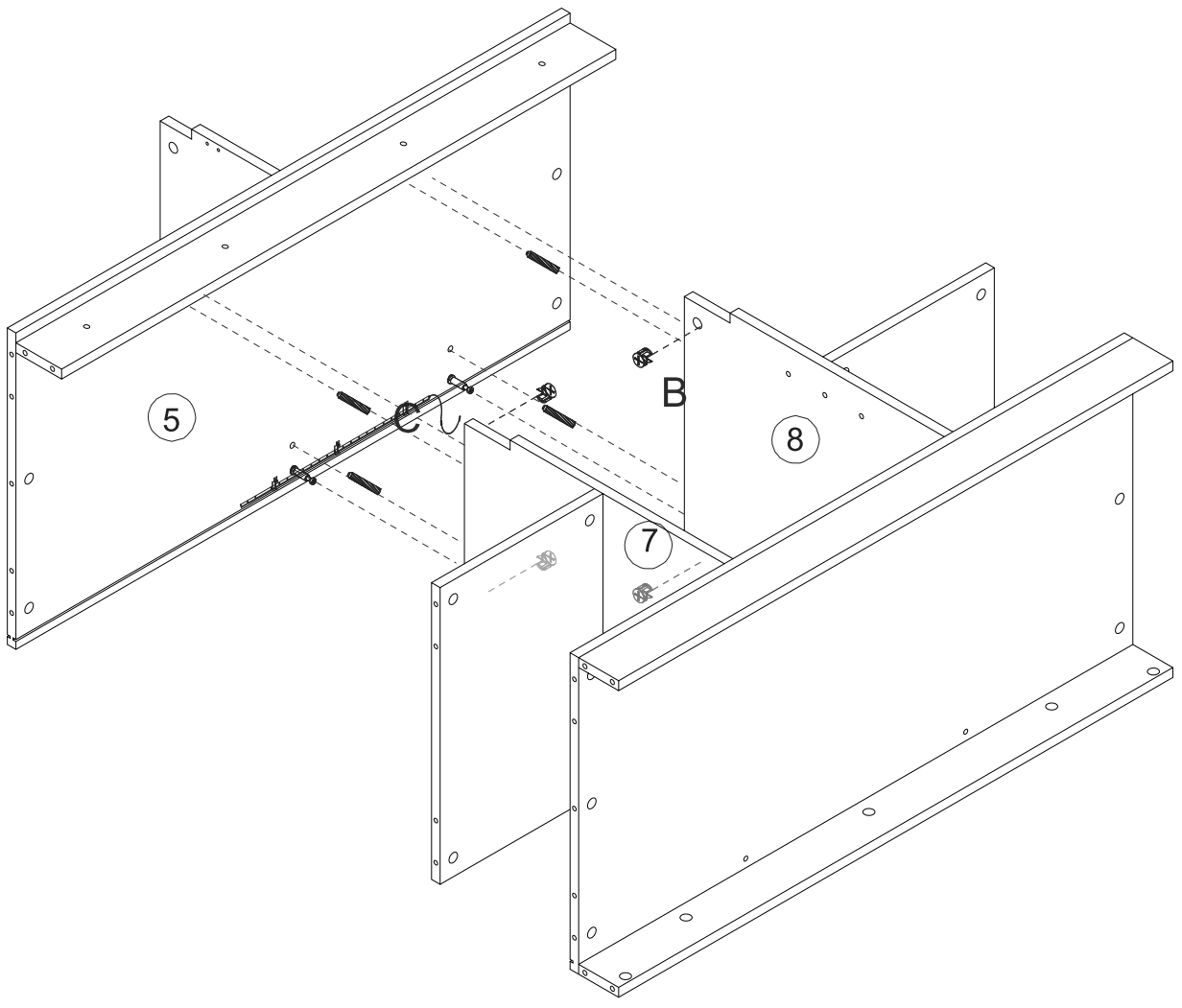

	
B x 4pcs	C x 4pcs

STEP 7

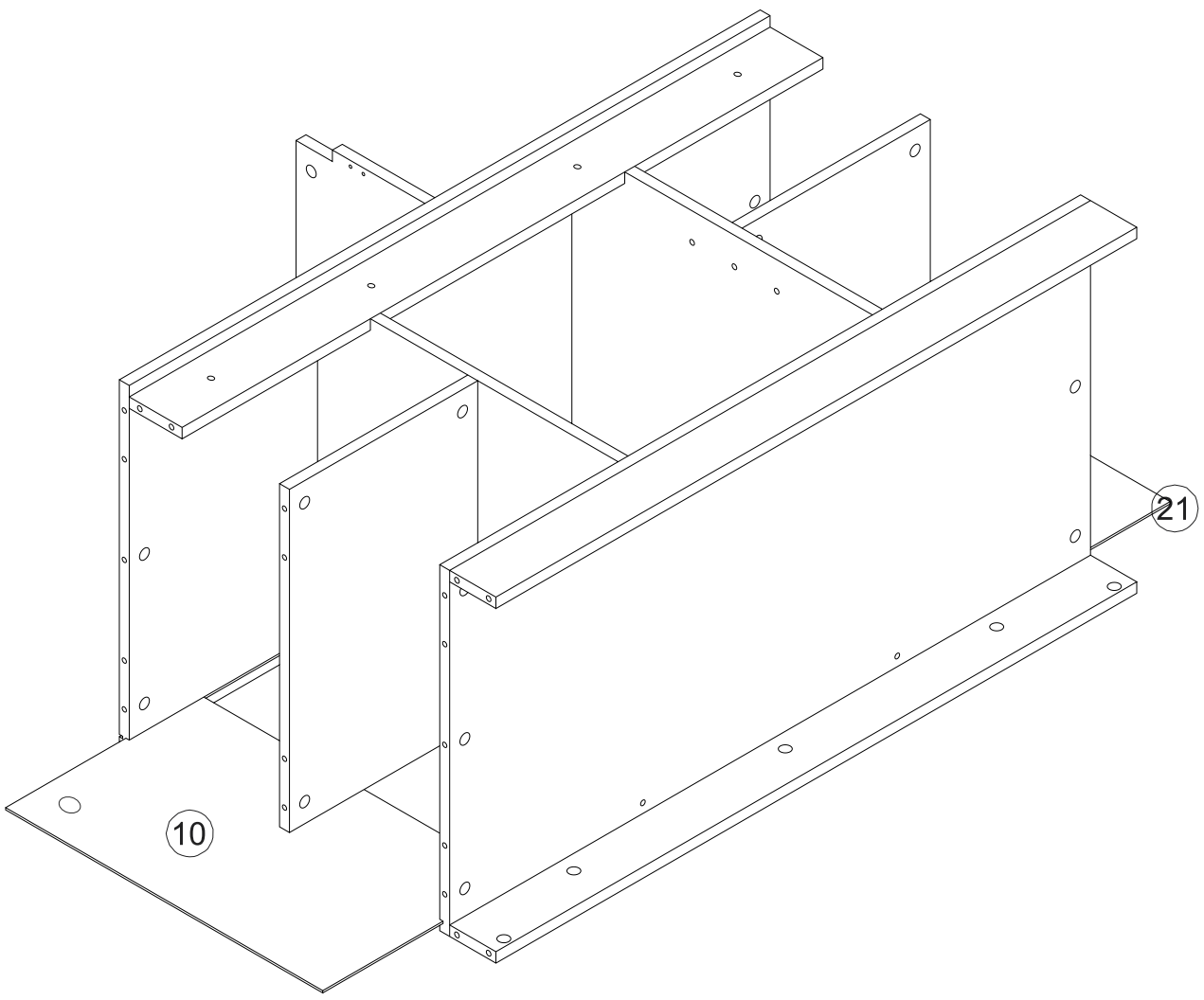

STEP 8

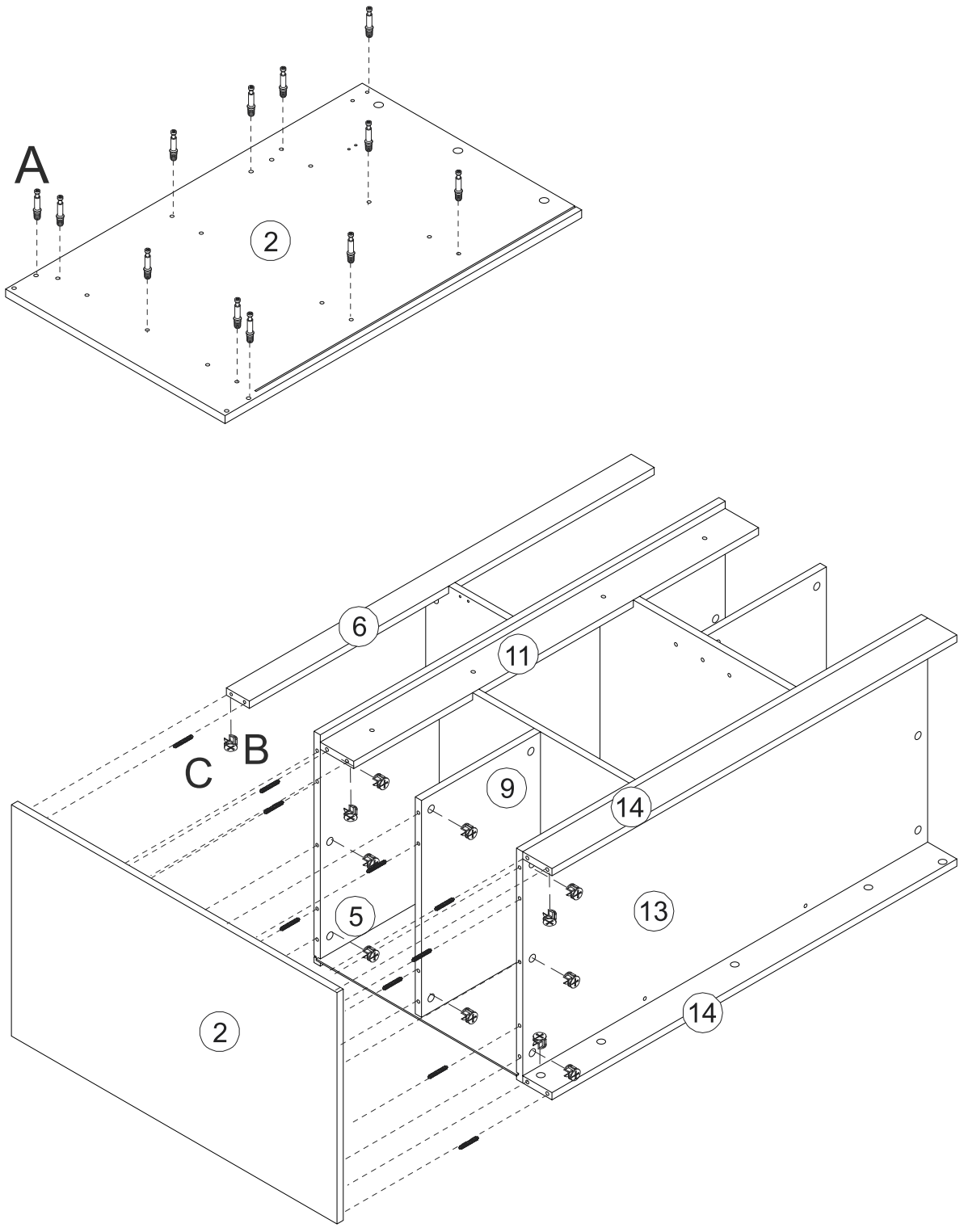

Ax 12pcs	Bx 12pcs	Cx10pcs

STEP 9

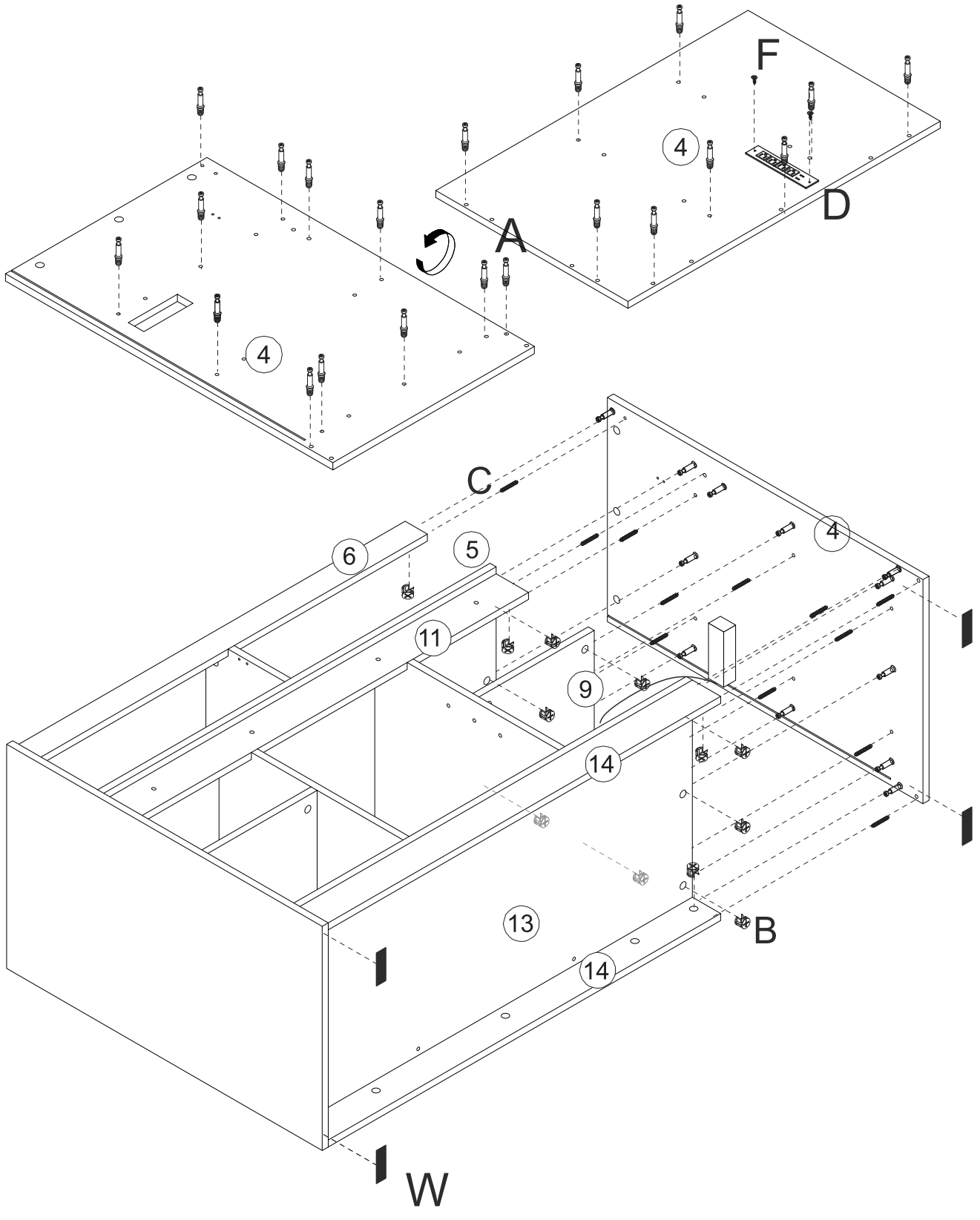

Dx1pc	Fx2pcs	Wx4pcs
Ax 21pcs	Bx 12pcs	Cx10pcs

STEP 10

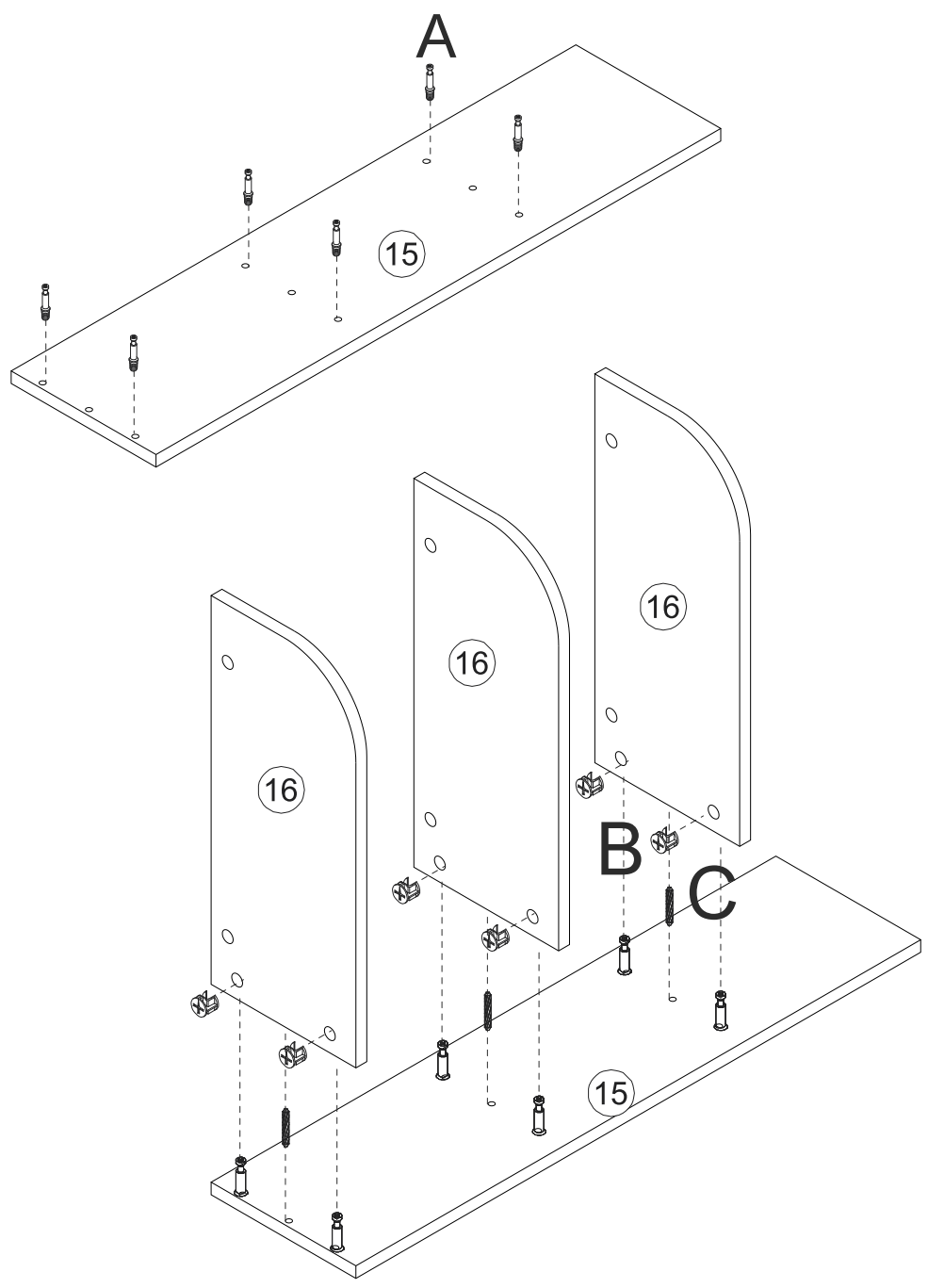

		
Ax6pcs	Bx3pcs	Cx3pcs

STEP 11

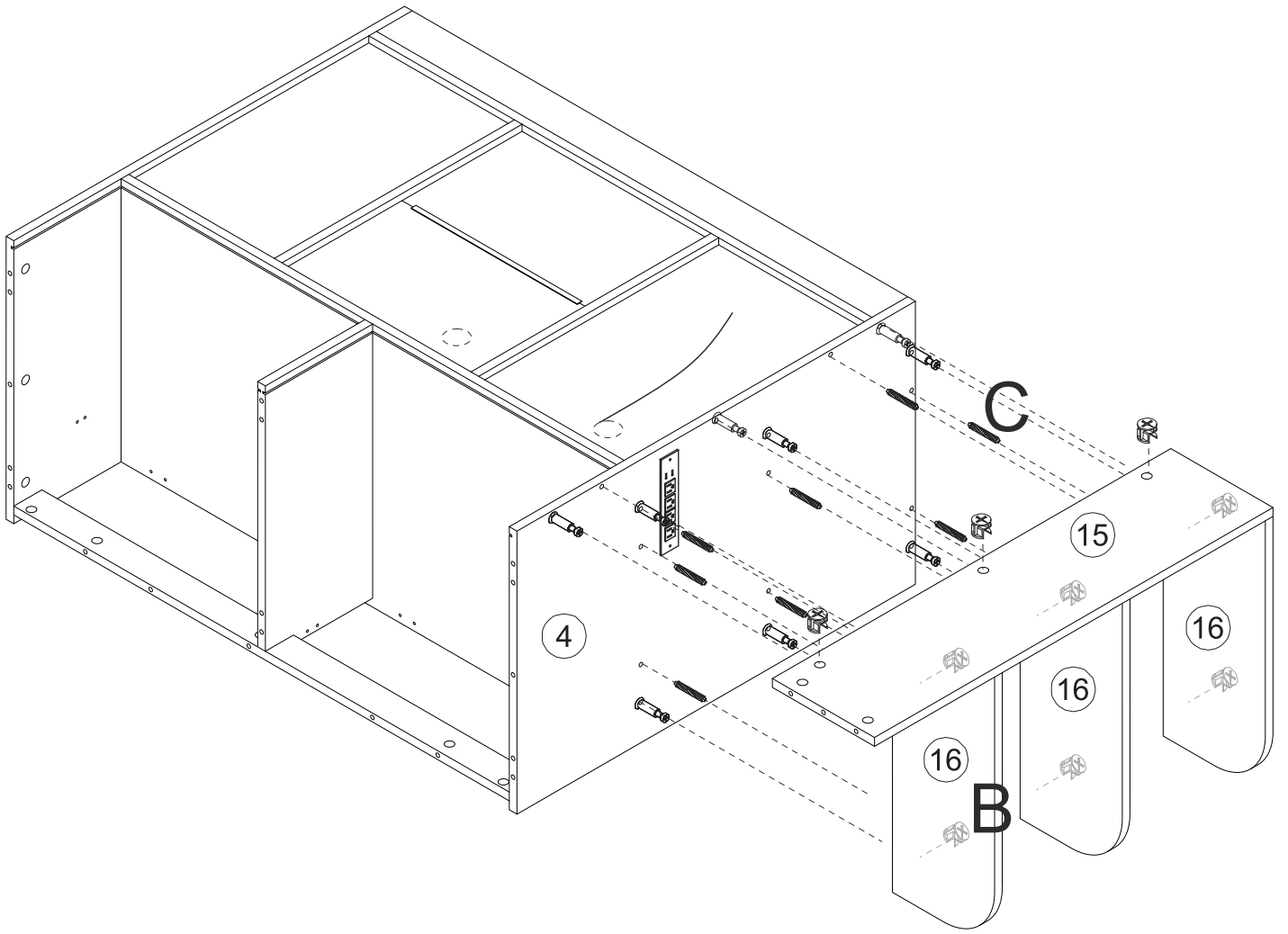

Bx9pcs	Cx8pcs

STEP 12

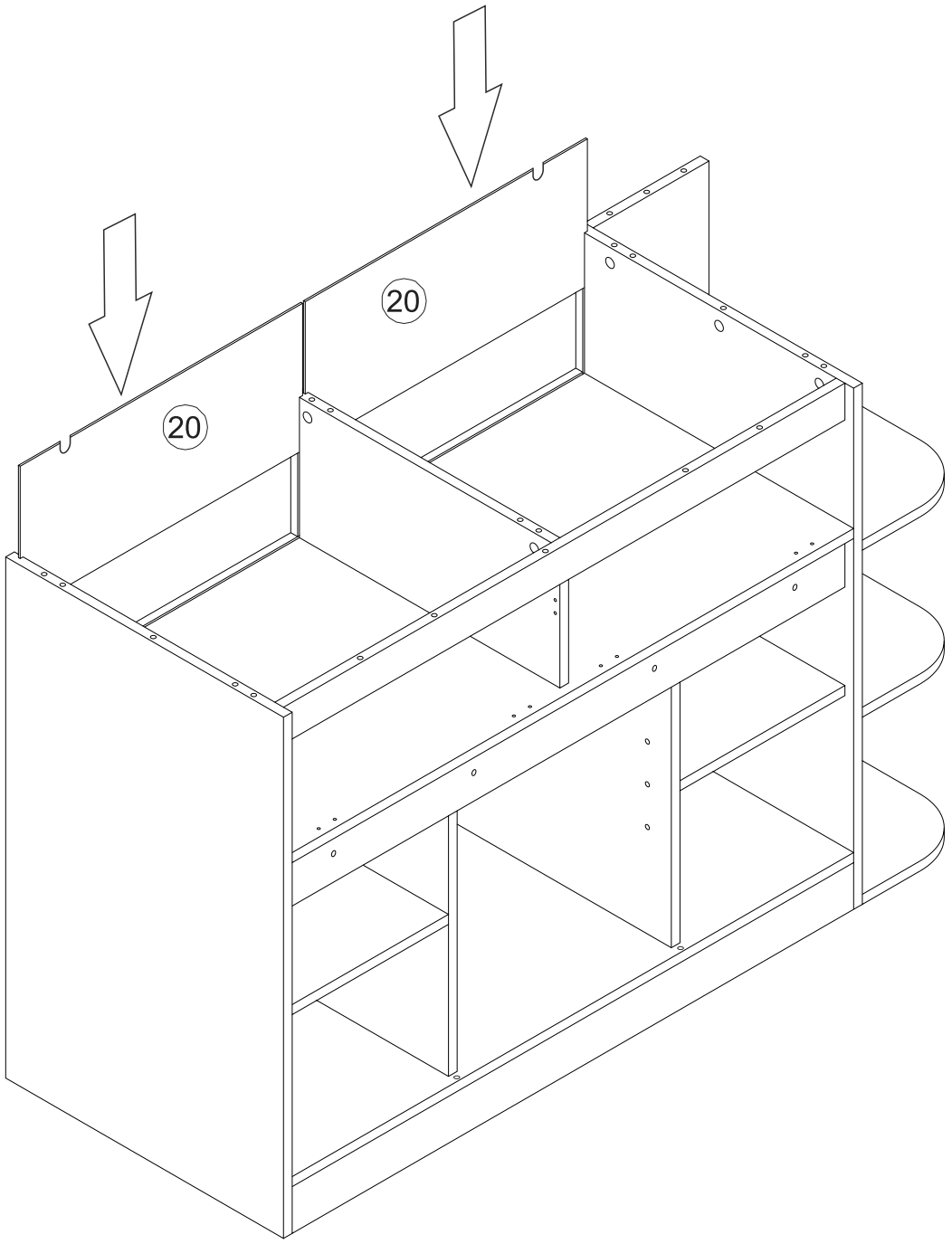

STEP 13

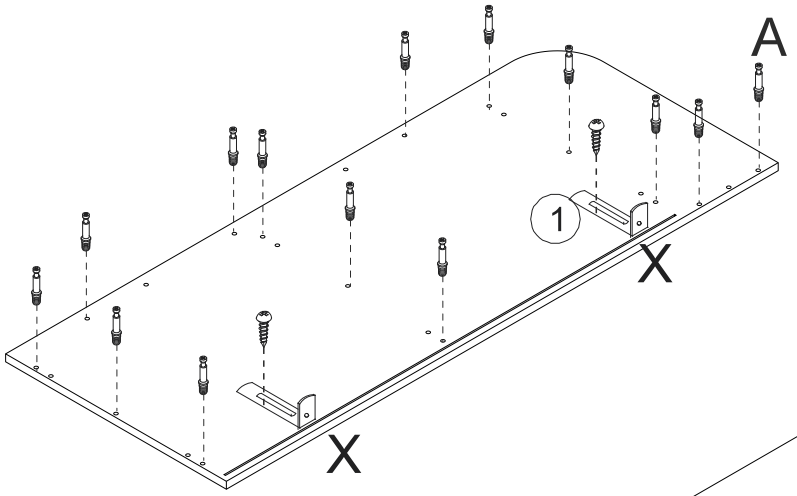

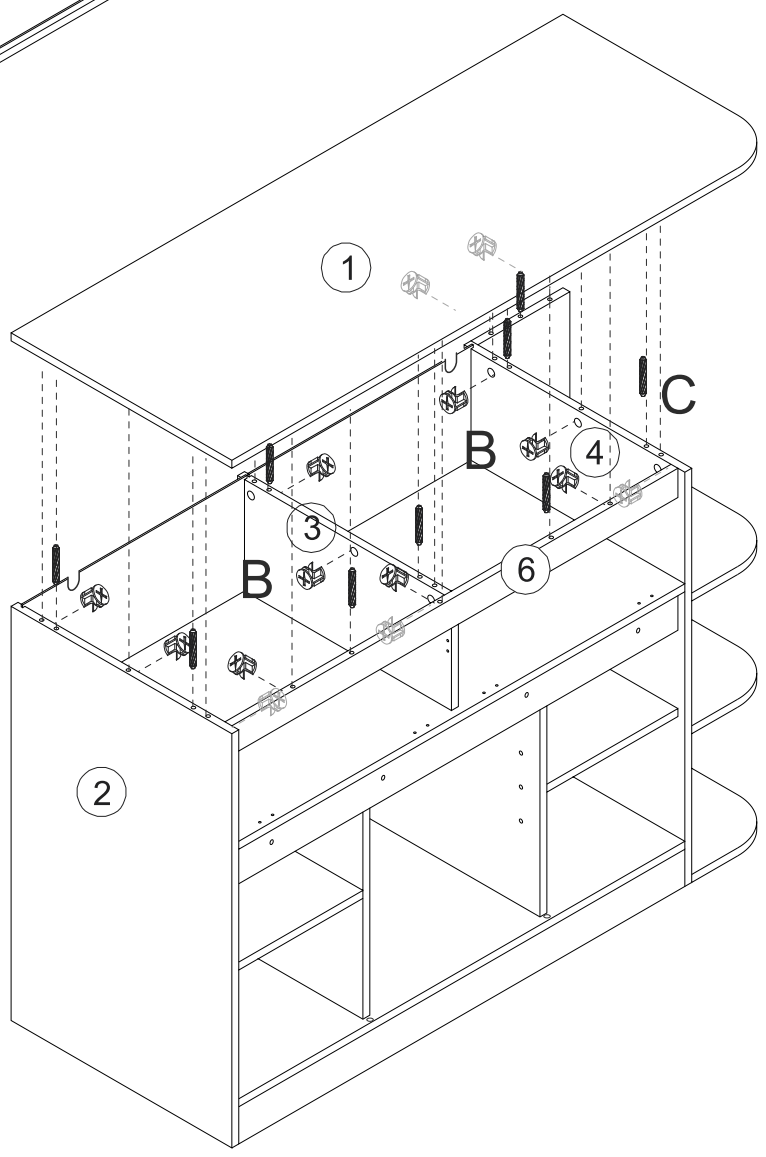

Ax 14 pcs	Bx 14 pcs	Cx9pcs	Xx2pcs

STEP 14

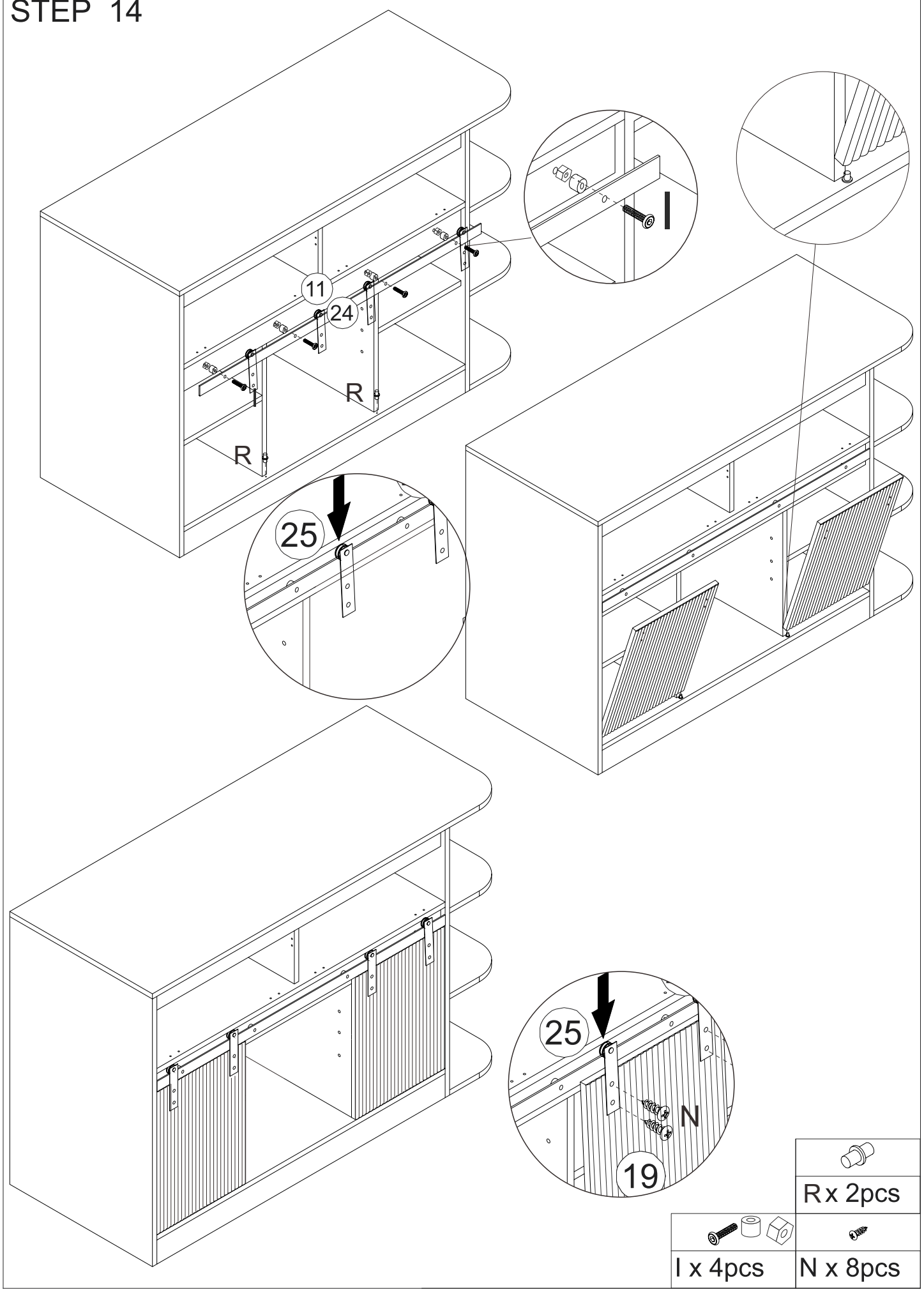

	R x 2pcs
I x 4pcs	N x 8pcs

STEP 15

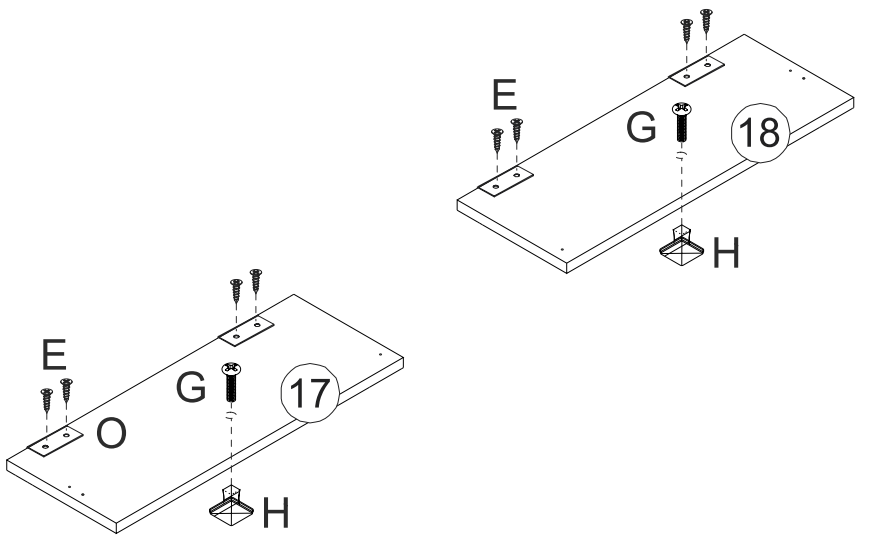

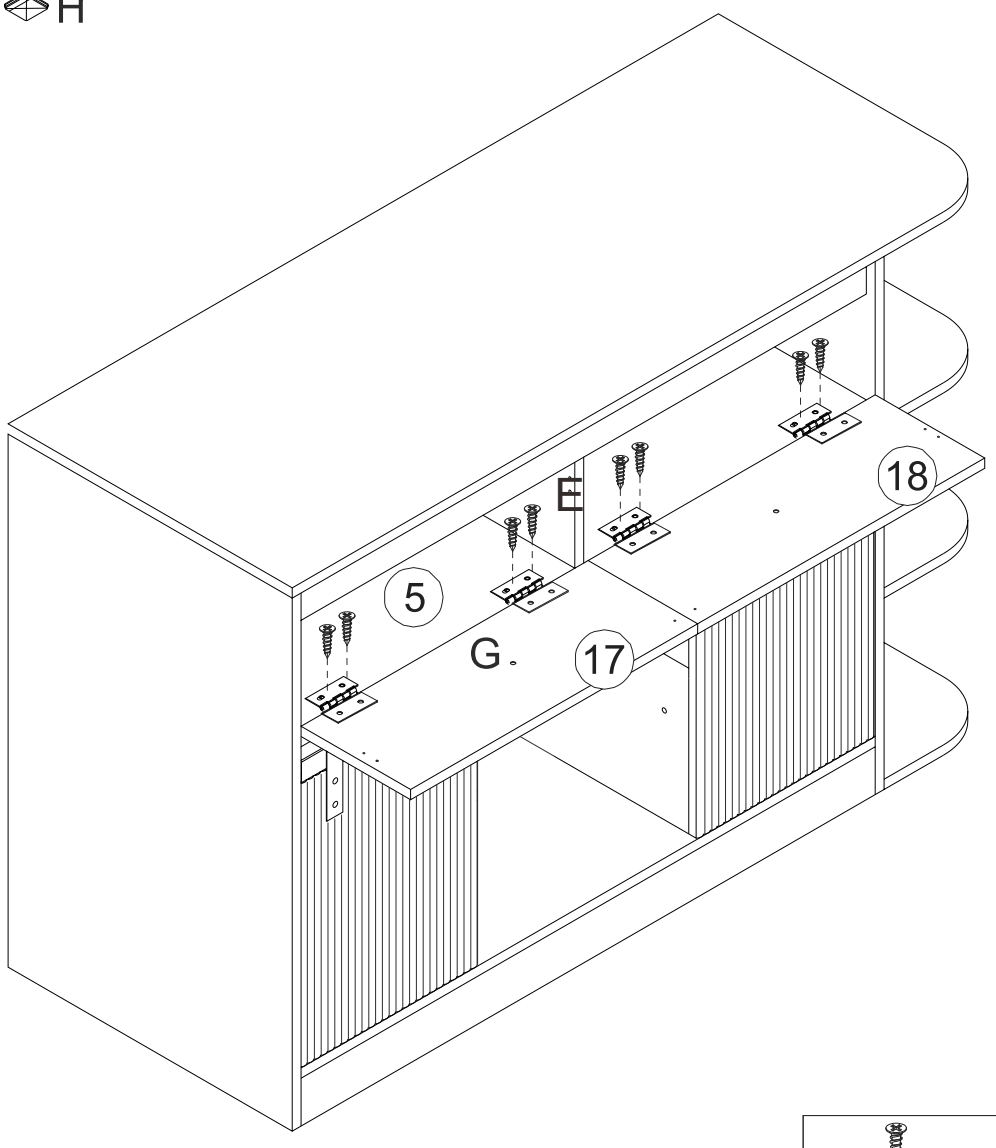

E x 16pcs	G x 2pcs
H x 2pcs	O x 4pcs

STEP 16

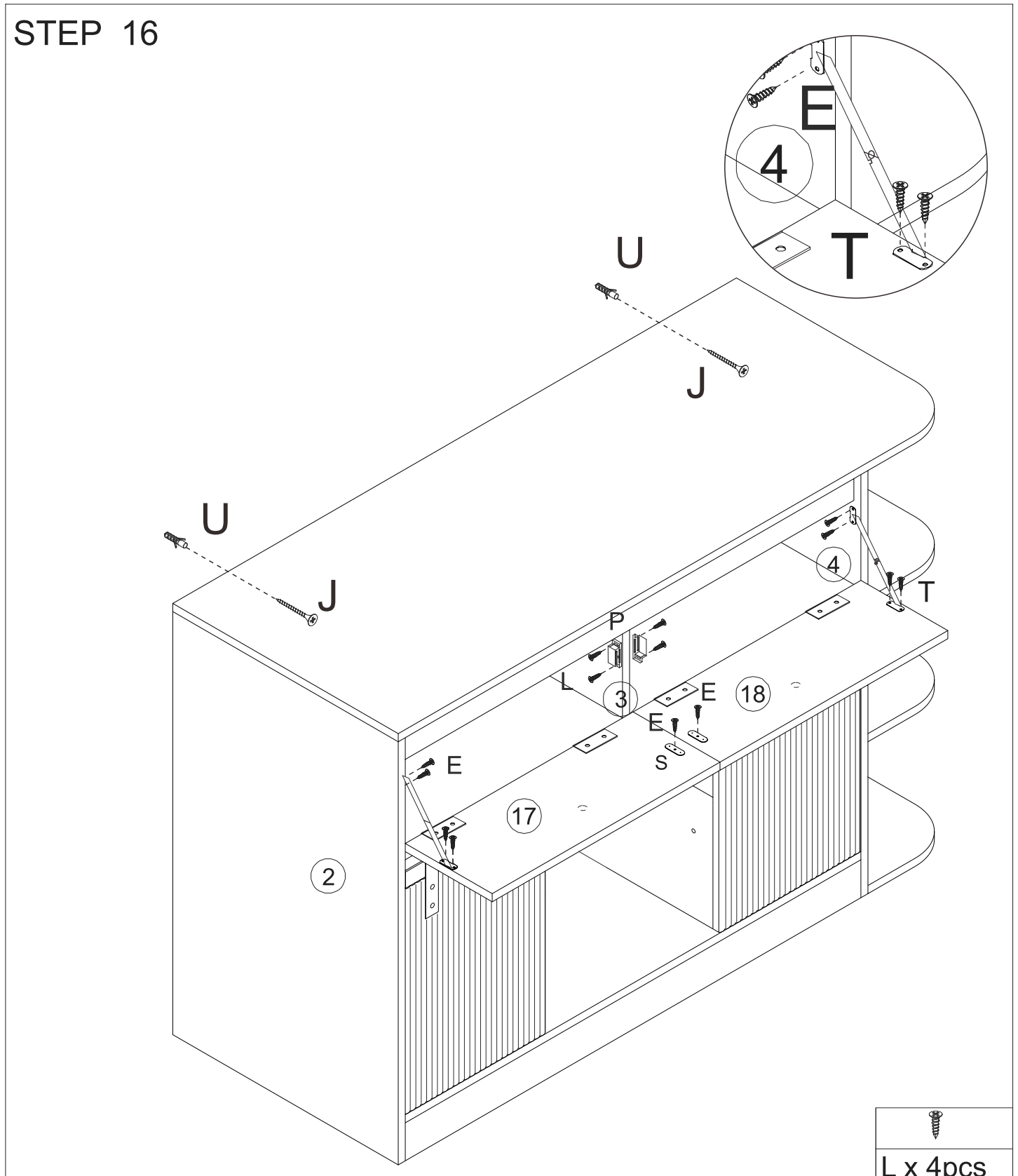

	L x 4pcs
E x 10pcs	Sx2pcs
P. x 2pcs	Ux2pcs
Tx 2pcs	Jx2pcs

STEP 17

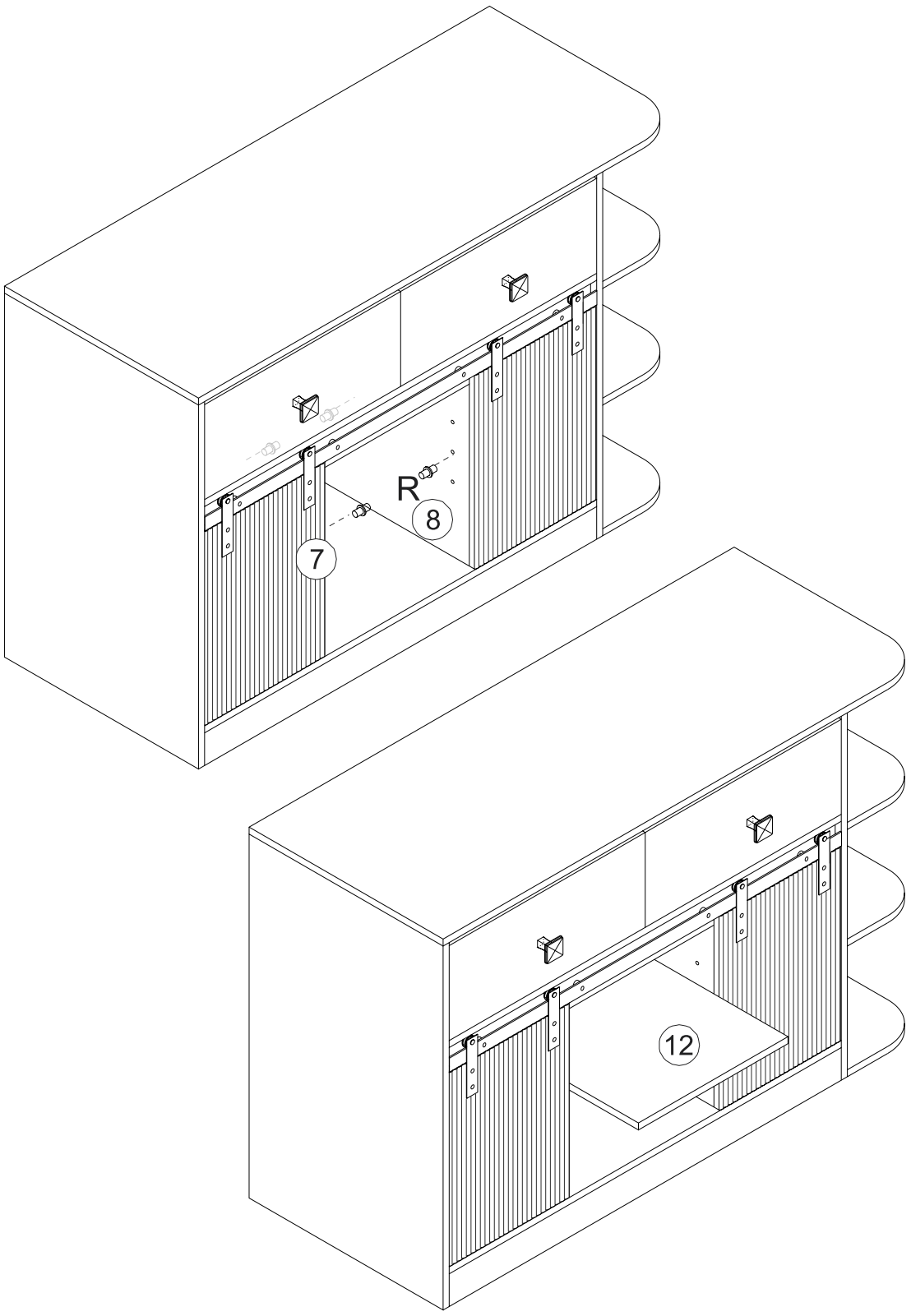

Rx4pcs

STEP 18

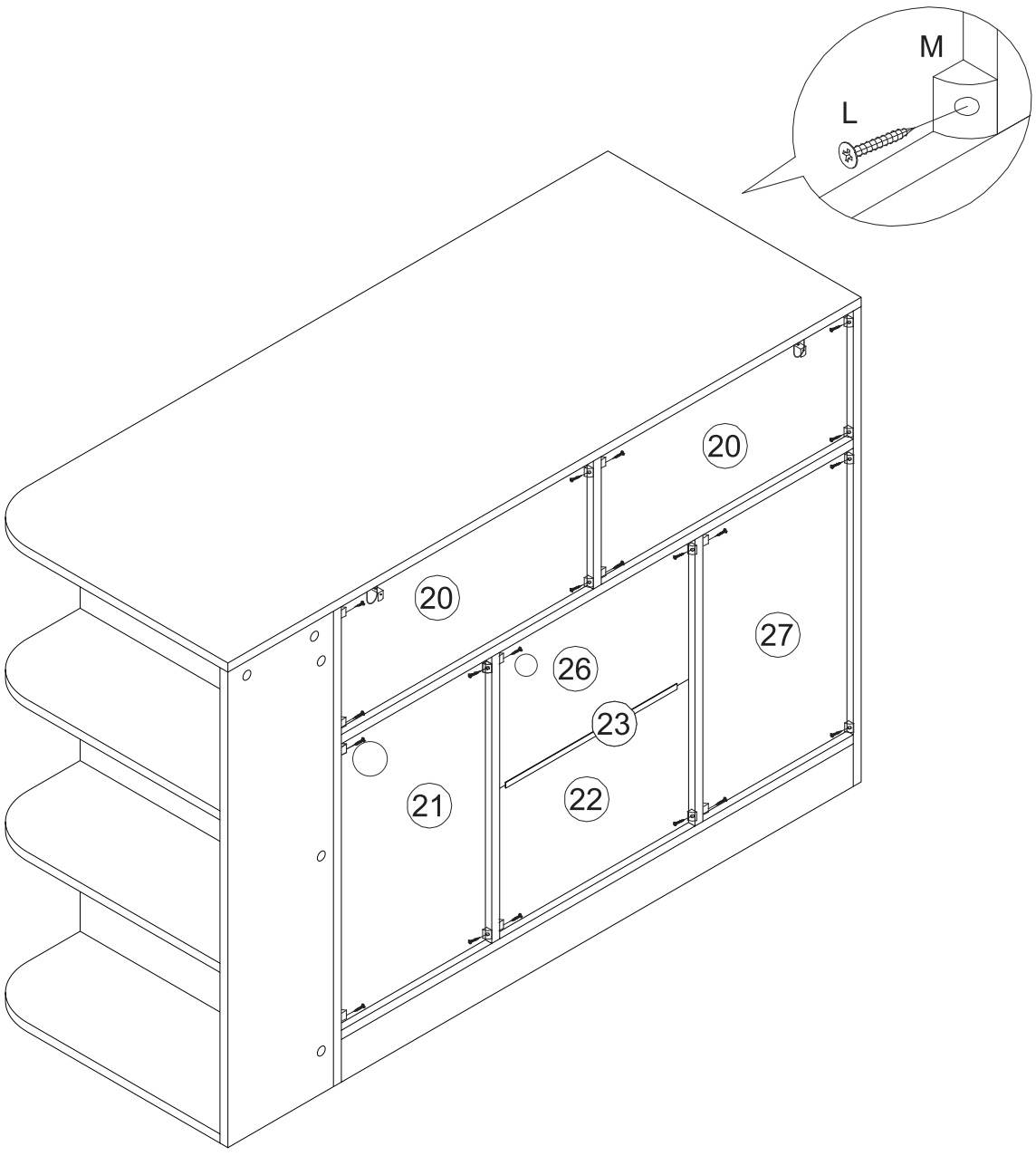

Lx 20pcs	M x 20pcs

Attestation of Conformity

Reference No.	:	**LCSA03045015E**
Applicant	:	**Dongguan Jingdeli Intelligent Technology Co.,Ltd.**
Address	:	**Room 202, Building 3, No.28, Dongkeng Town Yanhe West 1st Road, Dongkeng Town, Dongguan, 523000, Guangdong, China**
Trade Mark	:	**N/A**
Product	:	**Furniture Power Distribution Units**
Model	:	**JDL52TSKU, JDL maybe followed up to eight characters**
Standard	:	**FCC 47 CFR Part 15 Subpart B, Class B(SDoC), ANSI C63.4 -2014**

Important note:

Is herewith confirmed to comply with the requirements set out in the FCC Rules and Regulations FCC 47 CFR Part 15 Subpart B and CISPR PUB. 22 and the measurement procedures were according to ANSI C63.4-2014. The said equipment in the configuration described in this report shows the maximum emission levels emanating from equipment are within the compliance requirements.

This device is in conformance with Part 15 of the FCC Rules and Regulations forradio frequency devices. Operation of this product is subject to the following two conditions:
(1) this device may not cause harmful interference, and (2) this device must accept any interference received, including interference that maycause undesired operation.

Date of issue: March 11, 2025

LCS TESTING LABORATORY APPROVED
Manager

Shenzhen LCS Compliance Testing Laboratory Ltd.
Room 101, 201, Building A and Room 301, Building C, Juji Industrial Park, Yabianxueziwei, Shajing Street, Bao'an District, Shenzhen, Guangdong, China
Tel: (86)755-82591330 Fax: (86)755-82591332
Http://www.lcs-cert.com Email: webmaster@lcs-cert.com

Production Name: Furniture Power Distribution Unit
Model: JDL44PH

"This device complies with Part 15 of the FCC Rules.
Operation is subject to the following two conditions: (1) this device may not cause harmful interference, and (2) this device must accept any inrerference received, including interference that may cause undesired operation."

intertek
Total Quality. Assured.

AUTHORIZATION TO MARK

This authorizes the application of the Certification Mark(s) shown below to the models described in the Product(s) Covered section when made in accordance with the conditions set forth in the Certification Agreement and Listing Report. This authorization also applies to multiple listee model(s) identified on the correlation page of the Listing Report.

This document is the property of Intertek Testing Services and is not transferable. The certification mark(s) may be applied only at the location of the Party Authorized To Apply Mark.

Applicant:	Dongguan Jingdeli Intelligent Technology Co.,Ltd.	**Manufacturer:**	Dongguan Jingdeli Intelligent Technology Co.,Ltd.
Address:	Room 202, Building 3, No.28, Dongkeng Town Yanhe West 1st Road, Dongkeng Town, Dongguan, Guangdong 523000	**Address:**	Room 202, Building 3, No.28, Dongkeng Town Yanhe West 1st Road, Dongkeng Town, Dongguan, Guangdong 523000
Country:	China	**Country:**	China

Party Authorized To Apply Mark: Same as Manufacturer
Report Issuing Office: Intertek Testing Services (Shanghai FTZ) Co., Ltd

Control Number: *5032500* **Authorized by:** _____
for L. Matthew Snyder, Certification Manager

C ETL LISTED US
Intertek

This document supersedes all previous Authorizations to Mark for the noted Report Number.

This Authorization to Mark is for the exclusive use of Intertek's Client and is provided pursuant to the Certification agreement between Intertek and its Client. Intertek's responsibility and liability are limited to the terms and conditions of the agreement. Intertek assumes no liability to any party, other than to the Client in accordance with the agreement, for any loss, expense or damage occasioned by the use of this Authorization to Mark. Only the Client is authorized to permit copying or distribution of this Authorization to Mark and then only in its entirety. Use of Intertek's Certification mark is restricted to the conditions laid out in the agreement and in this Authorization to Mark. Any further use of the Intertek name for the sale or advertisement of the tested material, product or service must first be approved in writing by Intertek. Initial Factory Assessments and Follow up Services are for the purpose of assuring appropriate usage of the Certification mark in accordance with the agreement, they are not for the purposes of production quality control and do not relieve the Client of their obligations in this respect.

Intertek Testing Services NA Inc.
545 East Algonquin Road, Arlington Heights, IL 60005
Telephone 800-345-3851 or 847-439-5667 Fax 312-283-1672

Standard(s):	Furniture Power Distribution Units [UL 962A:2023 Ed.6] Cord reels and multi-outlet assemblies [CSA C22.2#308:2018 Ed.2]
Product:	Furniture Power Distribution Units
Models:	JDL; followed by up to six letter or digit.

Certificate – Certificat – 證明書 – Сертификат – 인증서 – شهادة

Shenzhen ZKT Technology Co., Ltd.
1/F, No. 101, Building B, No. 6, Tangwei Community Industrial Avenue,
Fuhai Street, Bao'an District, Shenzhen, China

SUPPLIER'S DECLARATION OF CONFORMITY

Certificate Number:ZKT-25072817789C

Certificate's Holder	:	**Dongguan Yihong Hardware Electronics Co., Ltd Room 901, No.2, Shangheng Road, Chang'an Town, Dongguan**
Manufacturer	:	**Dongguan Yihong Hardware Electronics Co., Ltd Room 901, No.2, Shangheng Road, Chang'an Town, Dongguan**
Trade Mark	:	**N/A**
Product	:	**Wirelesscontroller**
Model(s)	:	**YH-252 YH-358, YH-6183, YH-21KEY, YH-24KEY, YH-44KEY, YH-17KEY, LZZX-IR21-12-03, YH-088-24-44, YH-313, YH6180, YH-6181, YH-RF17**
Test Standard	:	**FCC Part 15 B, ANSI C63.4:2014**

This Attestation of Compliance is issued on a voluntary basis for electrical equipment below the voltage limits of FCC standard. The essential requirement are fulfilled accordingly based on the technical specifications applicable at the time of issuance. See also notes overleaf. It is only valid in connection with the test report number:**ZKT-25072817789**E.

Manager
Aug. 05, 2025

This Certificate of Conformity is based on single evaluation of the submitted sample(s) of the above mentioned product. It does not imply an assessment of the whole product and relevant . Directives to be observed.

☎ +86-400 000 9970 🖷 +86-755-22336688 ✉ zkt@zkt-lab.com 🌐 www.zkt-lab.com

Manufacturer's name : Dongguan Yihong Hardware Electronics Co., Ltd
Production Name: Wirelesscontroller
Model: YH-6181
FCCID:2A595YH-6181

"This device complies with Part 15 of the FCC Rules.
Operation is subject to the following two conditions: (1) this device may not cause harmful interference, and (2) this device must accept any inrerference received, including interference that may cause undesired operation."

FCC Part 15C Test Report
FCC ID:2A595YH-6181

Applicant:	Dongguan Yihong Hardware electronics Co., LTD
Address:	Room 1106, No.2, Shangheng Road, Chang'an Town, Dongguan, Guangdong, China
Manufacturer:	Dongguan Yihong Hardware electronics Co., LTD
Address:	Room 1106, No.2, Shangheng Road, Chang'an Town, Dongguan, Guangdong, China
EUT:	LED Controller
Trade Mark:	N/A
Model Number:	YH-6181 YH-252, YH-358, YH-6183, YH-21KEY, YH-24KEY, YH-44KEY, YH-17KEY, LZZX-IR21-12-03, YH-088-24-44, YH-313, YH6180, YH-RF17
Date of Receipt:	Jun. 16, 2025
Test Date:	Jul. 02, 2025 to Jul. 08, 2025
Date of Report:	Jul. 08, 2025
Prepared By:	Shenzhen DL Testing Technology Co., Ltd.
Address:	101-201, Building C, Shuanghuan, No.8, Baoqing Roa Baolong Industrial Zone, Baolong Street, Longgang Shenzhen, Guangdong, China.
Applicable Standards:	FCC CFR Title 47 Part 15 Subpart C Section 15.247 ANSI C63.10:2013
Test Result:	Pass
Report Number:	DLE-250708002R

Prepared (Test Engineer):	Dimon Tan
Reviewer (Supervisor):	Jack Bu
Approved (Manager):	Jade Yang

This test report is based on a single evaluation of one sample of above mentioned products. It is not permitted to be duplicated in extracts without written approval of Shenzhen DL Testing Technology Co., Ltd.

TCB

GRANT OF EQUIPMENT AUTHORIZATION

TCB

Certification
Issued Under the Authority of the
Federal Communications Commission
By:

DERYCOM CERTIFICATION SERVICES, INC.
1100 Falcon Avenue
Glencoe, MN 55336

Date of Grant: 07/10/2025

Application Dated: 07/10/2025

Dongguan Yihong Hardware electronics Co., LTD
Room 1106, No.2 Shangheng Road, Chang 'an Town
Dongguan, Guangdong, 523880
China

Attention: Wen Feng Zeng , Manager

NOT TRANSFERABLE

EQUIPMENT AUTHORIZATION is hereby issued to the named GRANTEE, and is VALID ONLY for the equipment identified hereon for use under the Commission's Rules and Regulations listed below.

FCC IDENTIFIER: 2A595YH-6181
Name of Grantee: Dongguan Yihong Hardware electronics Co., LTD
Equipment Class: Digital Transmission System
Notes: LED Controller

Grant Notes	FCC Rule Parts	Frequency Range (MHZ)	Output Watts	Frequency Tolerance	Emission Designator
	15C	2402.0 - 2480.0	0.0017		

Output power listed is conducted power. The antenna used with this transmitter must be installed to provide a minimum separation distance of at least 20 cm from all persons and must not be co-located or operating in conjunction with any other antenna or transmitter, except in accordance with FCC multi- transmitter product procedures. End-users must be provided with operating procedures for satisfying RF exposure compliance.