Fixture Type:

Catalog Number:

Project:

Location:

# Vornado

## Round Multi Light 3000K

| Model & Size | Color Temp & CRI | Watt | Lumens | Finish |
|---|---|---|---|---|
| ❍ PD-84903R 7" - 3 Lights | ❍ 3000K 90 | 44 W | 2383<br>2902 | ❍ BK Black<br>❍ CH Chrome |

Example: **PD-84903R-CH**

For custom requests please contact customs@waclighting.com

**DESCRIPTION**

Twisted. A roller coaster-inspired lighting design, this masterpiece of artistry and light is crafted from single pieces that loop in and around themselves, creating dramatic strips ofenergy-efficient LED light.

**FEATURES**

- Omnidirectional diffused illumination
- Hand-crafted, asymmetric & seamless construction, variation expected
- Low profile, adjustable powered aircraft cables for an ultra-clean look
- Driver concealed within the canopy

**SPECIFICATIONS**

| | |
|---|---|
| **Color Temp:** | 3000K |
| **Input:** | 120/277V,50/60Hz |
| **CRI:** | 90 |
| **Dimming:** | ELV: 100-10% ,TRIAC: 100-5% |
| **Rated Life:** | 50000 Hours |
| **Standards:** | ETL, cETL |
| | Damp Location Listed |
| **Construction:** | Aluminum body with silicon diffuser |

**FINISHES:**

Chrome

Black

**LINE DRAWING:**

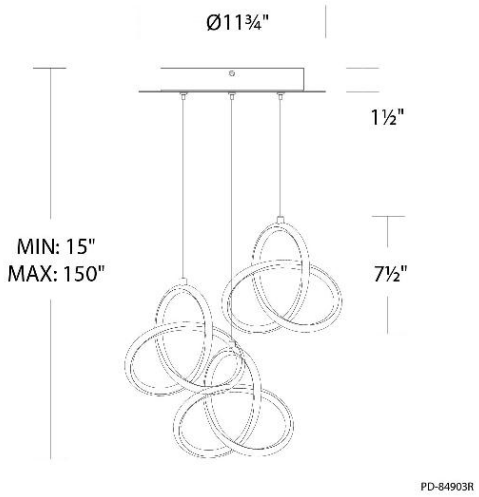

Fixture Type:

Catalog Number:

Project:

Location:

# Vornado

## Round Multi Light 3000K

| Model & Size | Color Temp & CRI | Watt | Lumens | Finish |
|---|---|---|---|---|
| ❍ PD-84905R 7" - 5 Lights | ❍ 3000K 90 | 77 W | 4061<br>4837 | ❍ BK Black<br>❍ CH Chrome |

Example: **PD-84905R-CH**

For custom requests please contact customs@waclighting.com

**DESCRIPTION**

Twisted. A roller coaster-inspired lighting design, this masterpiece of artistry and light is crafted from single pieces that loop in and around themselves, creating dramatic strips ofenergy-efficient LED light.

**FEATURES**

- Omnidirectional diffused illumination
- Hand-crafted, asymmetric & seamless construction, variation expected
- Low profile, adjustable powered aircraft cables for an ultra-clean look
- Driver concealed within the canopy

**SPECIFICATIONS**

| | |
|---|---|
| **Color Temp:** | 3000K |
| **Input:** | 120/277V,50/60Hz |
| **CRI:** | 90 |
| **Dimming:** | ELV: 100-10% ,TRIAC: 100-5% |
| **Rated Life:** | 50000 Hours |
| **Standards:** | ETL, cETL |
| | Damp Location Listed |
| **Construction:** | Aluminum body with silicon diffuser |

**FINISHES:**

Chrome Black

**LINE DRAWING:**

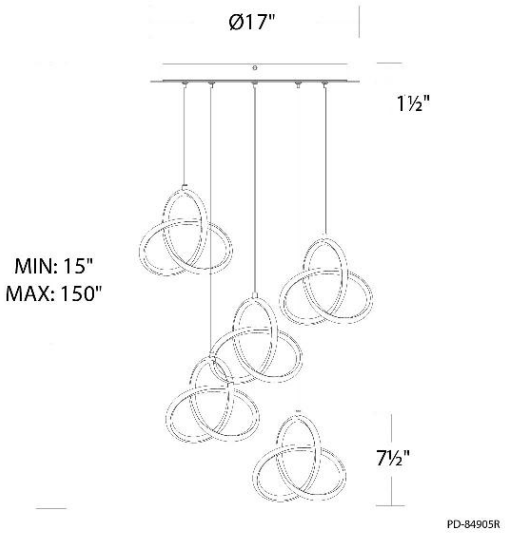

Fixture Type:

Catalog Number:

Project:

Location:

# Vornado

## Round Multi Light 3000K

| Model & Size | Color Temp & CRI | Watt | Lumens | Finish |
|---|---|---|---|---|
| ❍ PD-84909R 7" - 9 Lights | ❍ 3000K 90 | 138 W | 7505<br>8707 | ❍ BK Black<br>❍ CH Chrome |

Example: **PD-84909R-CH**

For custom requests please contact customs@waclighting.com

**DESCRIPTION**

Twisted. A roller coaster-inspired lighting design, this masterpiece of artistry and light is crafted from single pieces that loop in and around themselves, creating dramatic strips ofenergy-efficient LED light.

**FEATURES**

- Omnidirectional diffused illumination
- Hand-crafted, asymmetric & seamless construction, variation expected
- Low profile, adjustable powered aircraft cables for an ultra-clean look
- Driver concealed within the canopy

**SPECIFICATIONS**

| | |
|---|---|
| **Color Temp:** | 3000K |
| **Input:** | 120/277V,50/60Hz |
| **CRI:** | 90 |
| **Dimming:** | ELV: 100-10% ,TRIAC: 100-5% |
| **Rated Life:** | 50000 Hours |
| **Standards:** | ETL, cETL<br>Damp Location Listed |
| **Construction:** | Aluminum body with silicon diffuser |

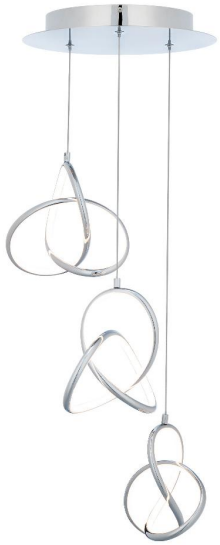

**FINISHES:**

Chrome

Black

**LINE DRAWING:**

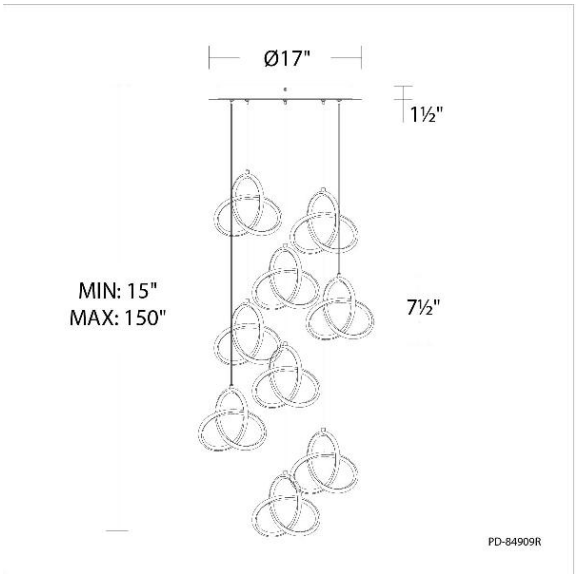

Fixture Type:

Catalog Number:

Project:

Location:

# Vornado

## Round Multi Light 3000K

| Model & Size | Color Temp & CRI | Watt | Lumens | Finish |
|---|---|---|---|---|
| ❍ PD-84915R 7" - 15 Lights | ❍ 3000K 90 | 230 W | 12509<br>14511 | ❍ BK Black<br>❍ CH Chrome |

Example: **PD-84915R-CH**

For custom requests please contact customs@waclighting.com

**DESCRIPTION**

Twisted. A roller coaster-inspired lighting design, this masterpiece of artistry and light is crafted from single pieces that loop in and around themselves, creating dramatic strips ofenergy-efficient LED light.

**FEATURES**

- Omnidirectional diffused illumination
- Hand-crafted, asymmetric & seamless construction, variation expected
- Low profile, adjustable powered aircraft cables for an ultra-clean look
- Driver concealed within the canopy

**SPECIFICATIONS**

| | |
|---|---|
| **Color Temp:** | 3000K |
| **Input:** | 120/277V,50/60Hz |
| **CRI:** | 90 |
| **Dimming:** | ELV: 100-10% ,TRIAC: 100-5% |
| **Rated Life:** | 50000 Hours |
| **Standards:** | ETL, cETL<br>Damp Location Listed |
| **Construction:** | Aluminum body with silicon diffuser |

**FINISHES:**

Chrome

Black

**LINE DRAWING:**

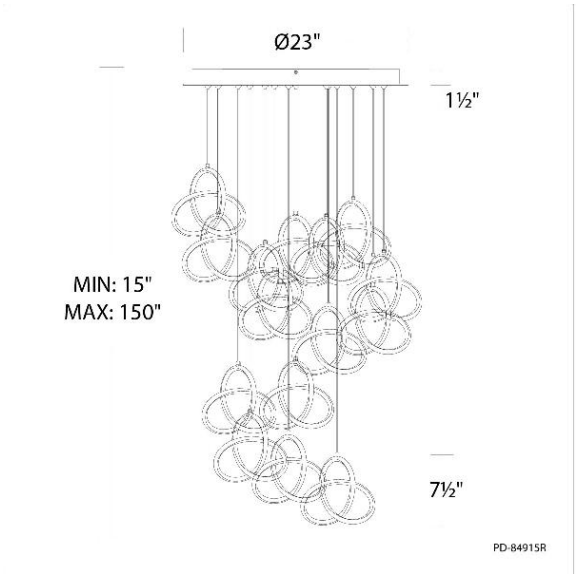

Fixture Type:

Catalog Number:

Project:

Location:

# Vornado

## Round Multi Light 3000K

| Model & Size | Color Temp & CRI | Watt | Lumens | Finish |
|---|---|---|---|---|
| ❍ PD-84921R 7" - 21 Lights | ❍ 3000K 90 | 321 W | 17513<br>20316 | ❍ BK Black<br>❍ CH Chrome |

Example: **PD-84921R-CH**

For custom requests please contact customs@waclighting.com

**DESCRIPTION**

Twisted. A roller coaster-inspired lighting design, this masterpiece of artistry and light is crafted from single pieces that loop in and around themselves, creating dramatic strips ofenergy-efficient LED light.

**FEATURES**

- Omnidirectional diffused illumination
- Hand-crafted, asymmetric & seamless construction, variation expected
- Low profile, adjustable powered aircraft cables for an ultra-clean look
- Driver concealed within the canopy

**SPECIFICATIONS**

| | |
|---|---|
| **Color Temp:** | 3000K |
| **Input:** | 120/277V,50/60Hz |
| **CRI:** | 90 |
| **Dimming:** | ELV: 100-10% ,TRIAC: 100-5% |
| **Rated Life:** | 50000 Hours |
| **Standards:** | ETL, cETL |
| | Damp Location Listed |
| **Construction:** | Aluminum body with silicon diffuser |

**FINISHES:**

Chrome Black
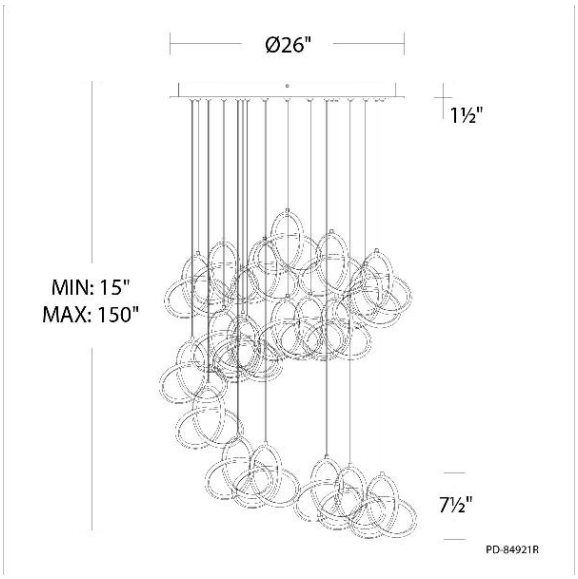
**LINE DRAWING:**