Parts List

XGZ002 | 100CM
Caution: After unpacking, check the quantity of all parts against this instruction manual.

1 Top panel

1000 × 300 × 20MM

Qty: 1

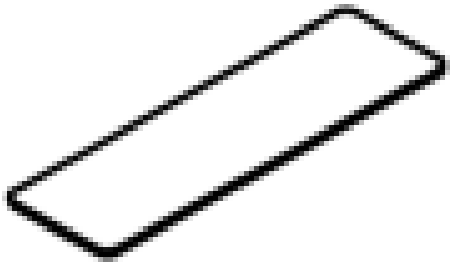

2 Side frame

740 × 290 × 53MM

Qty: 2

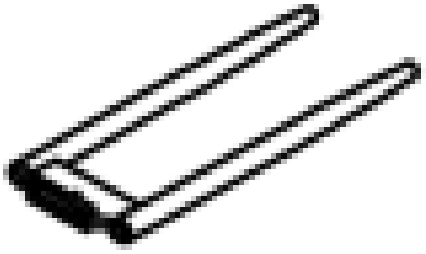

3 Intermediate panel

760 × 75 × 20MM

Qty: 1

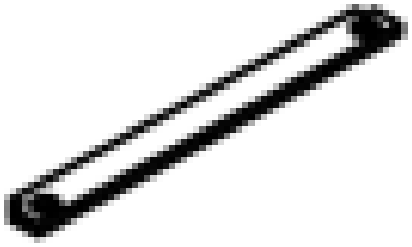

Hardware List

A Hex socket screw

M6 × 35MM

Qty: 4

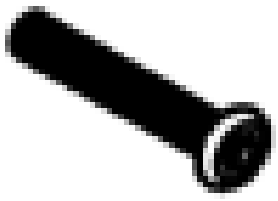

B Washer

M6 × 13MM

Qty: 4

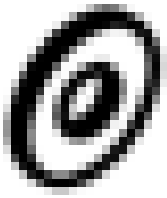

D Connector

M6 × 60MM

Qty: 2

E Crescent washer

M8 × 14 × 27 × 6MM

Qty: 2

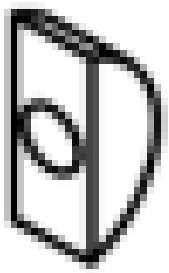

Hardware List

F Hex nut

M6 × 10MM

Qty: 2

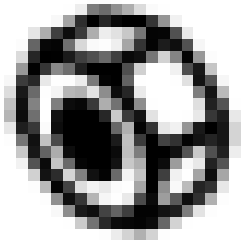

H Wood dowel

Ø8 × 30MM

Qty: 2

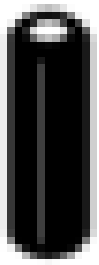

I Flat-head rapid-thread screw

M6 × 50MM

Qty: 3

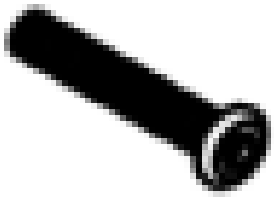

J Adjustable foot

M6 × 15MM

Qty: 4

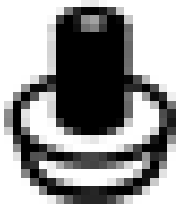

Hardware & Tools

C Hex key (tool)

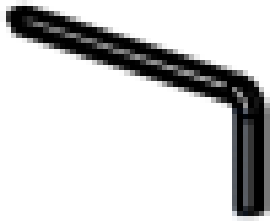

M4 × 100 × 40MM

Qty: 1

G Open-end wrench (tool)

M10

Qty: 1

K Anti-tipping hardware

Qty: 1

Step 1

Install connector D into side frame (2), as shown.
Repeat for both side frames. Hardware: D × 2 total.

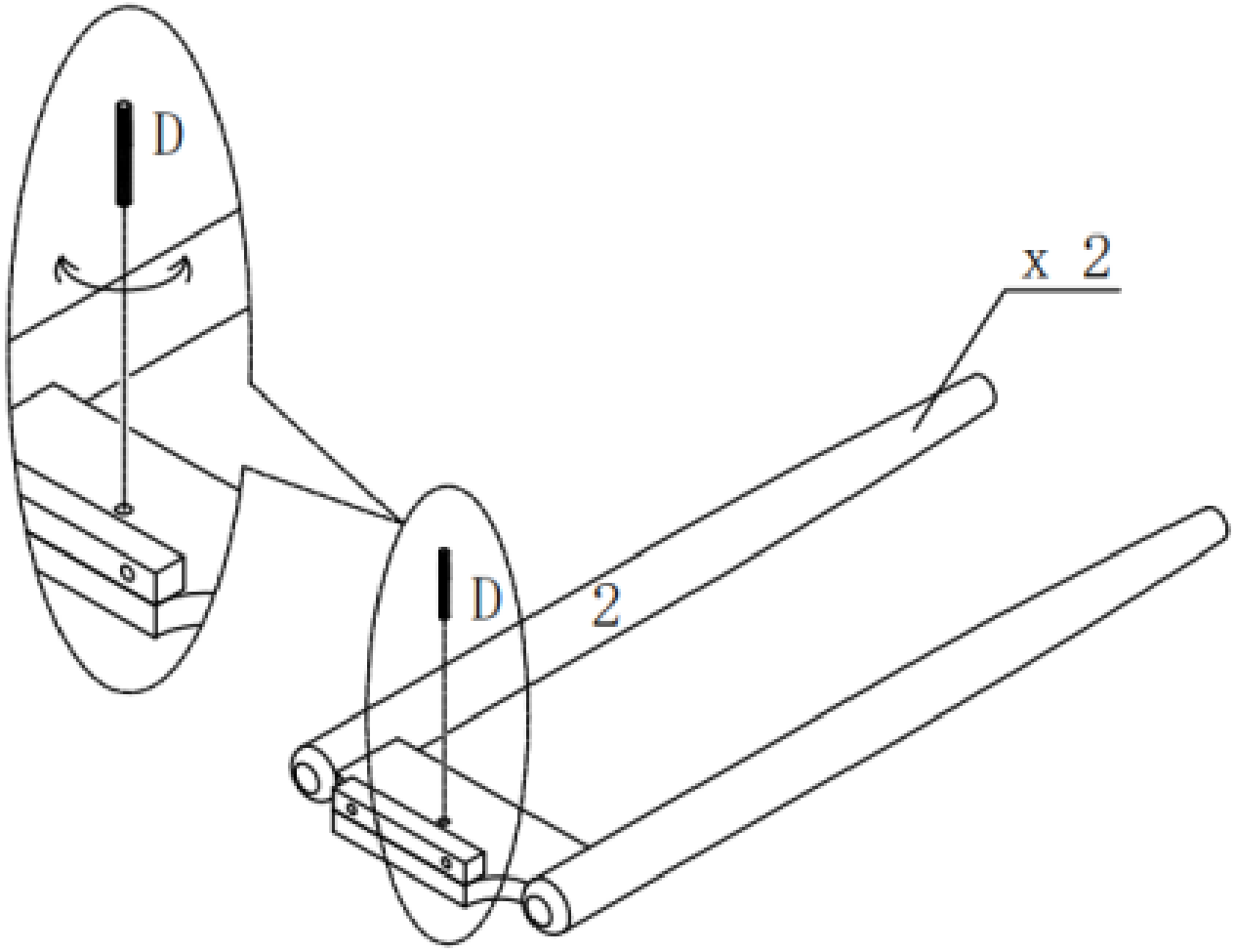

Step 2

Join intermediate panel (3) to the side frames (2), as shown.

Hardware: E × 2, F × 2 Tool: G × 1

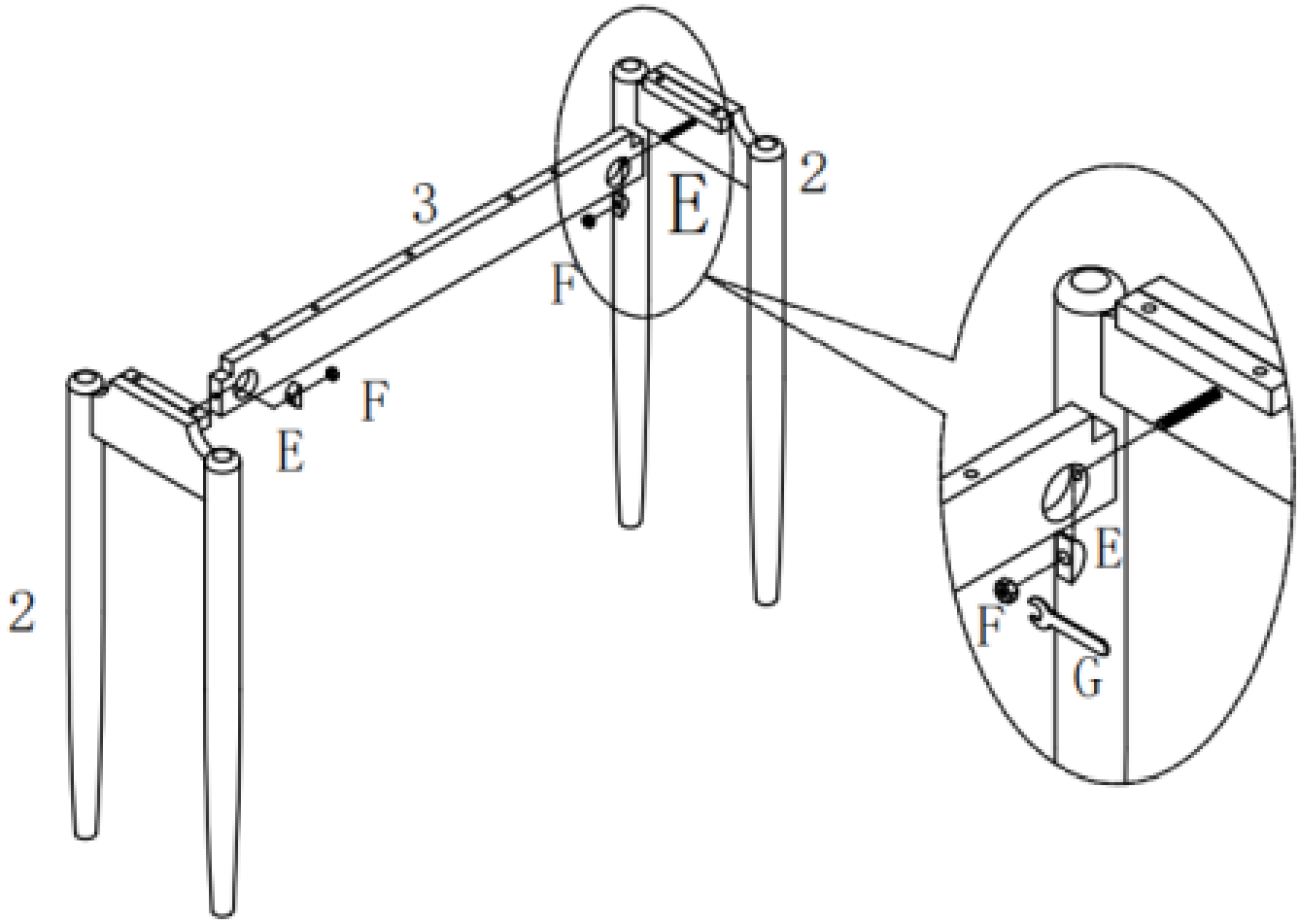

Step 3

Attach the frame to top panel (1) and install feet J, as shown.

Hardware: A × 4, B × 4, H × 2, I × 3, J × 4

Tool: C × 1

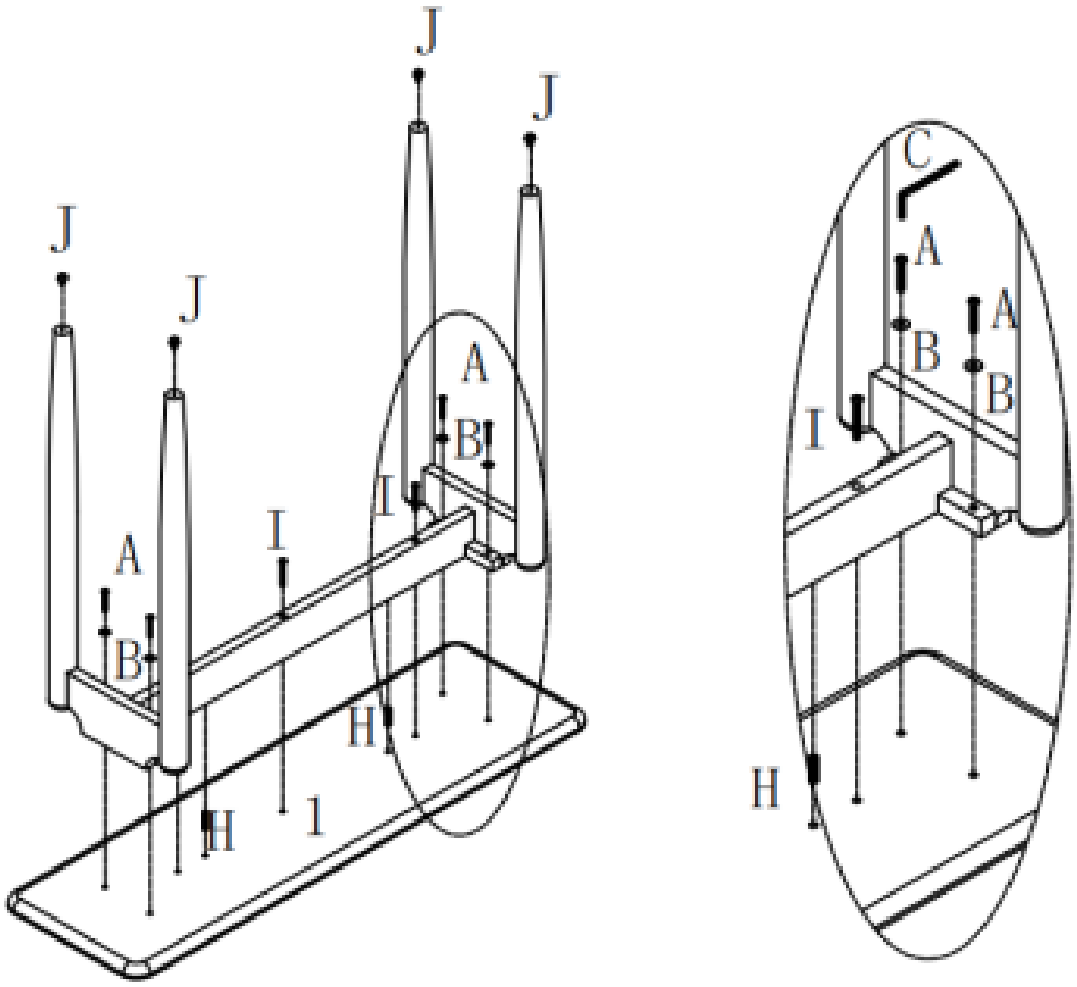

Step 4
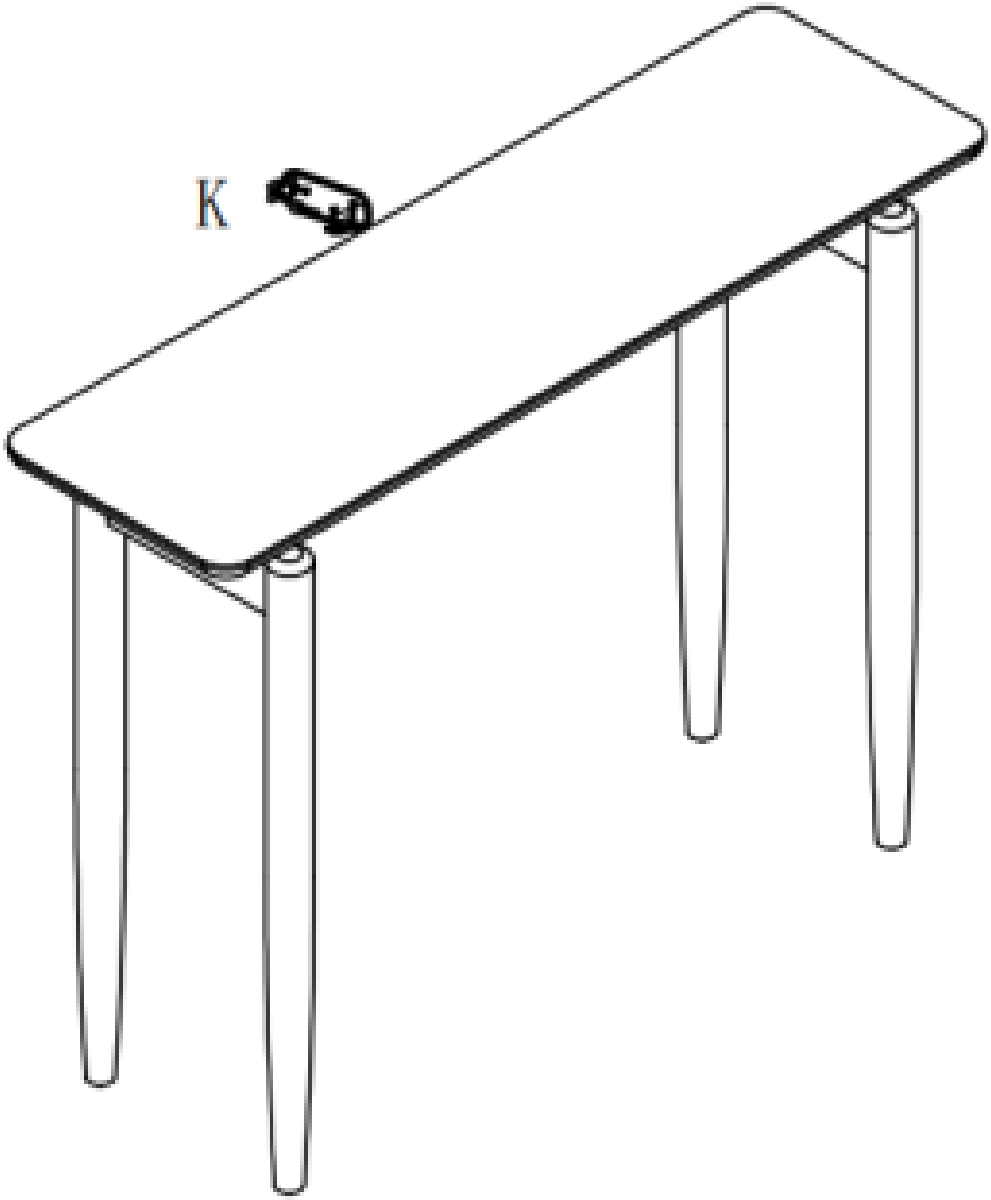
Note: The optional anti-tipping device K can be installed after assembly.