Over Toilet Storage Cabinet

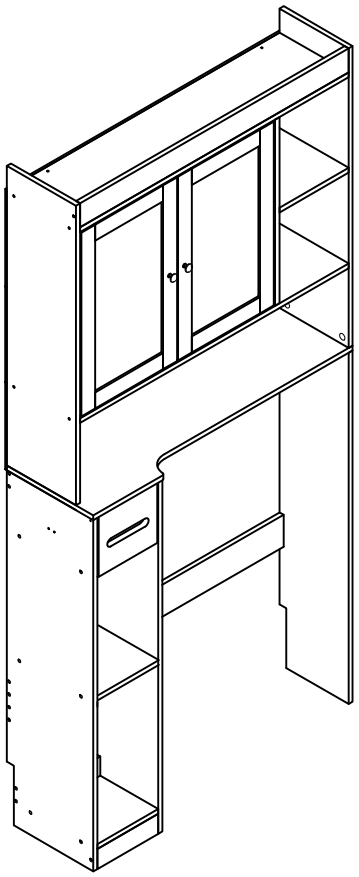

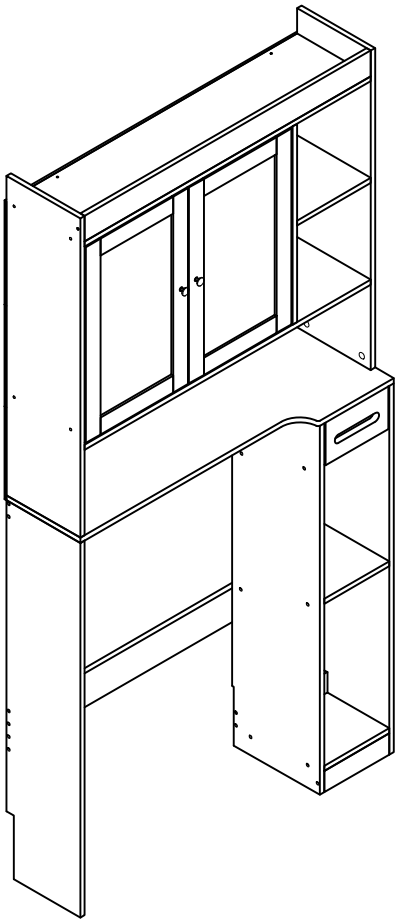

Installation Video OR

MTJ-White
https://vimeo.com/1132687585

Assembly Instructions

Nivisre After-Sales Service Card

Dear Customer,

Thank you for choosing Nivisre! We are committed to providing high-quality furniture and exceptional service.

If you encounter any issues, including but not limited to:

- ✓ Shipping damage
- ✓ Quality issues
- ✓ Installation difficulties
- ✓ Missing accessories

Contact Us:
Email: zhangzhoubiding@163.com

Please feel free to contact us, and we will resolve your issue as soon as possible!

To help us assist you more efficiently, please include your platform order number when contacting us (e.g., 123-1234567-1234567).

Your satisfaction is our top priority! Thank you for your support!

---Nivisre Customer Service Team





WARNING !

Children have died from furniture tip—over. To reduce the risk of furniture tip—over:

- ALWAYS install tip-over restraint provided.
- NEVER put a TV on this product.
- NEVER allow children to stand, climb or hang on drawers,doors,or shelves.
- **NEVER open more than one drawer at a time.**
- **Place heaviest items in the lowest drawer.**

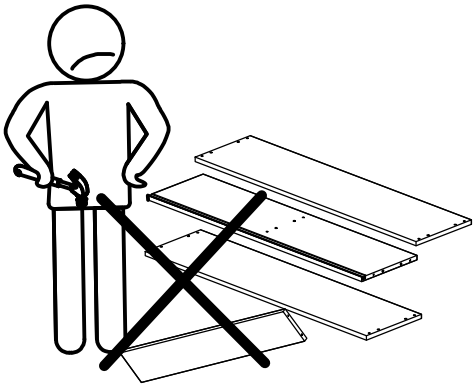

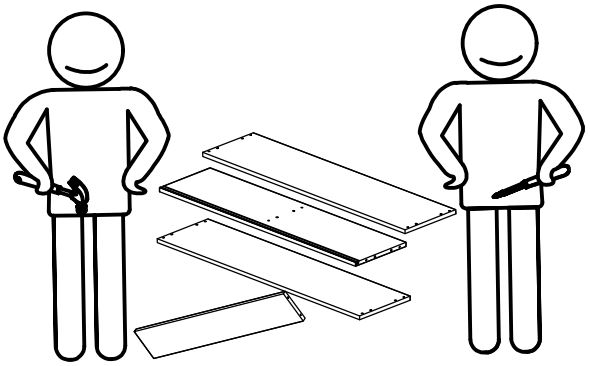

We recommend at least 2 people for the assembly.

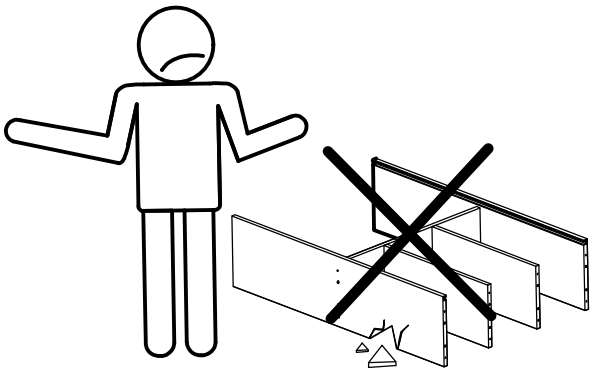

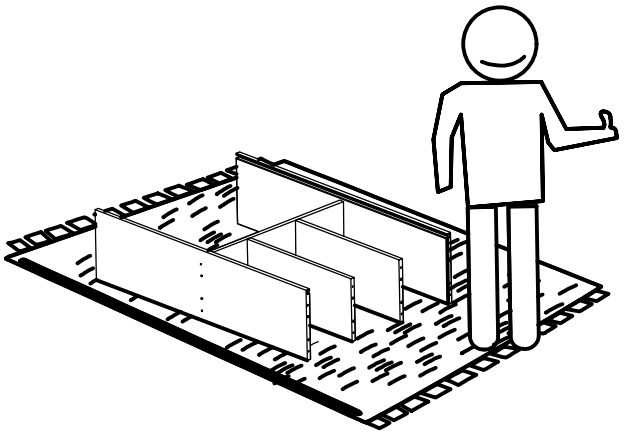

To prevent any damage during assembly,
place a mat under the pieces.

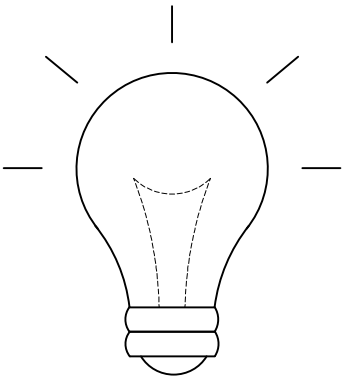

friendly reminder

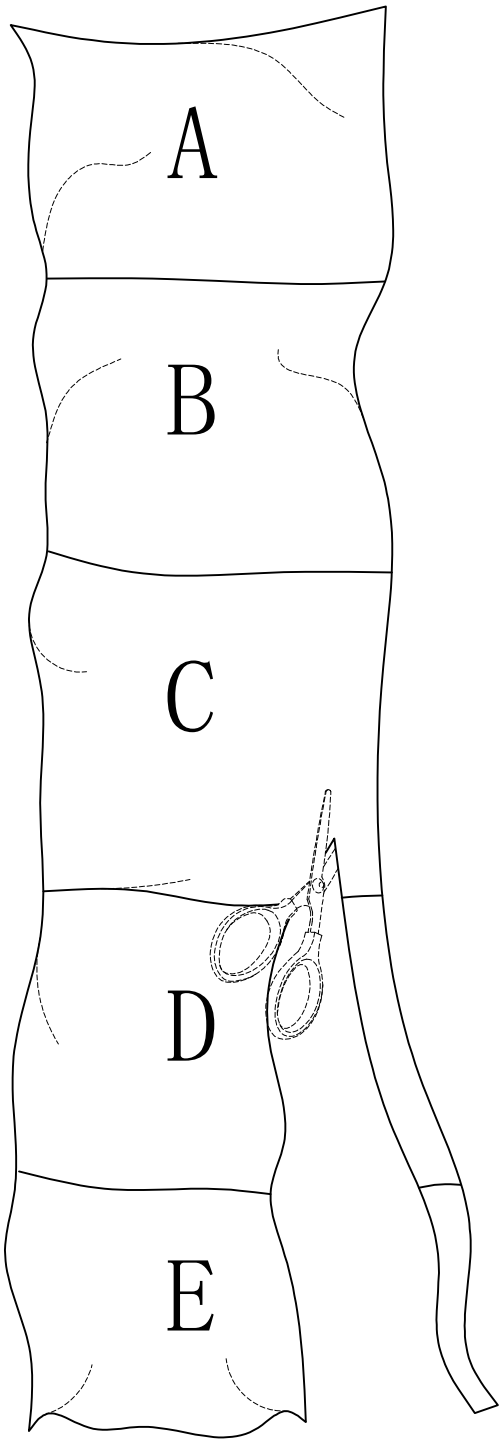

To avoid errors and confusion during the installation of accessories, use the type and quantity of hardware accessories according to the installation procedure described in the instructions. First, unroll the accessories bag and lay out the hardware accessories, cut holes in the side, and take out the hardware accessories

PARTS DIAGRAM

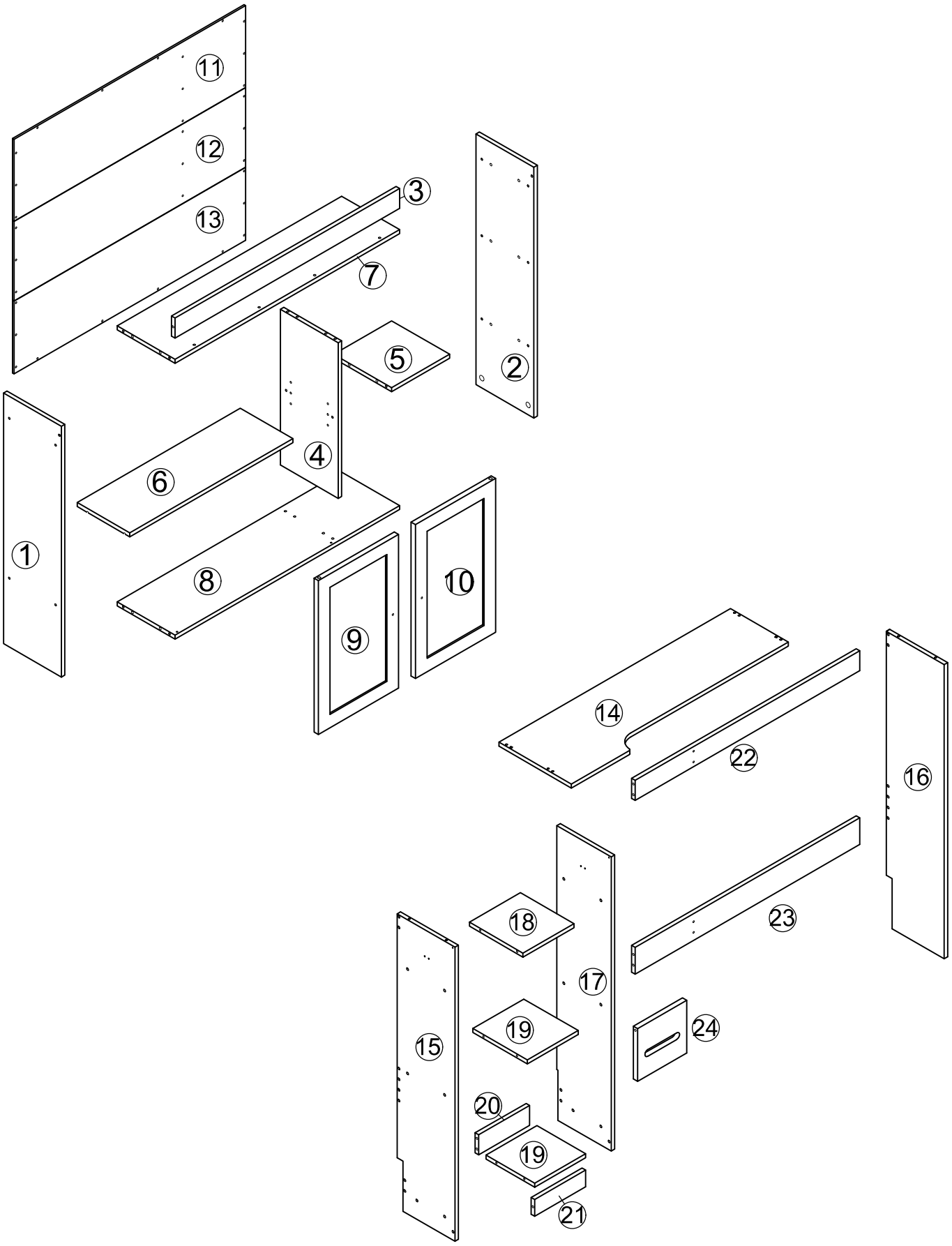

HARDWARE KIT

A x 20+1pcs  Ø6*30mm	B x 4+1pcs  Ø15*10mm	C x 4+1pcs 	D x 56+2pcs 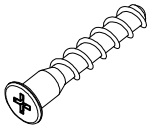 Ø5*38mm
E x 28+2pcs 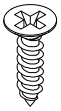 Ø3.5x12mm	F x 3pcs 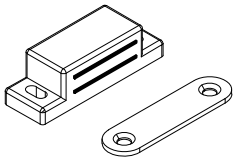	G x 6+1pcs 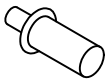	H x 4+1pcs  Ø5*16mm
I x 2pcs 	J x 2pcs 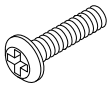 M4*20mm	K x 12+2pcs  Ø3.0*14mm	L x 2pcs 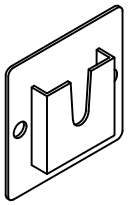
M x 2pcs 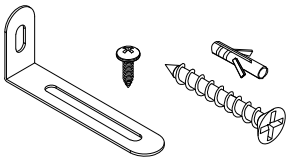	N x 1pcs 	O x 2pcs 	P x 1pcs 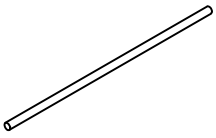
Q x68+4  Ø20			

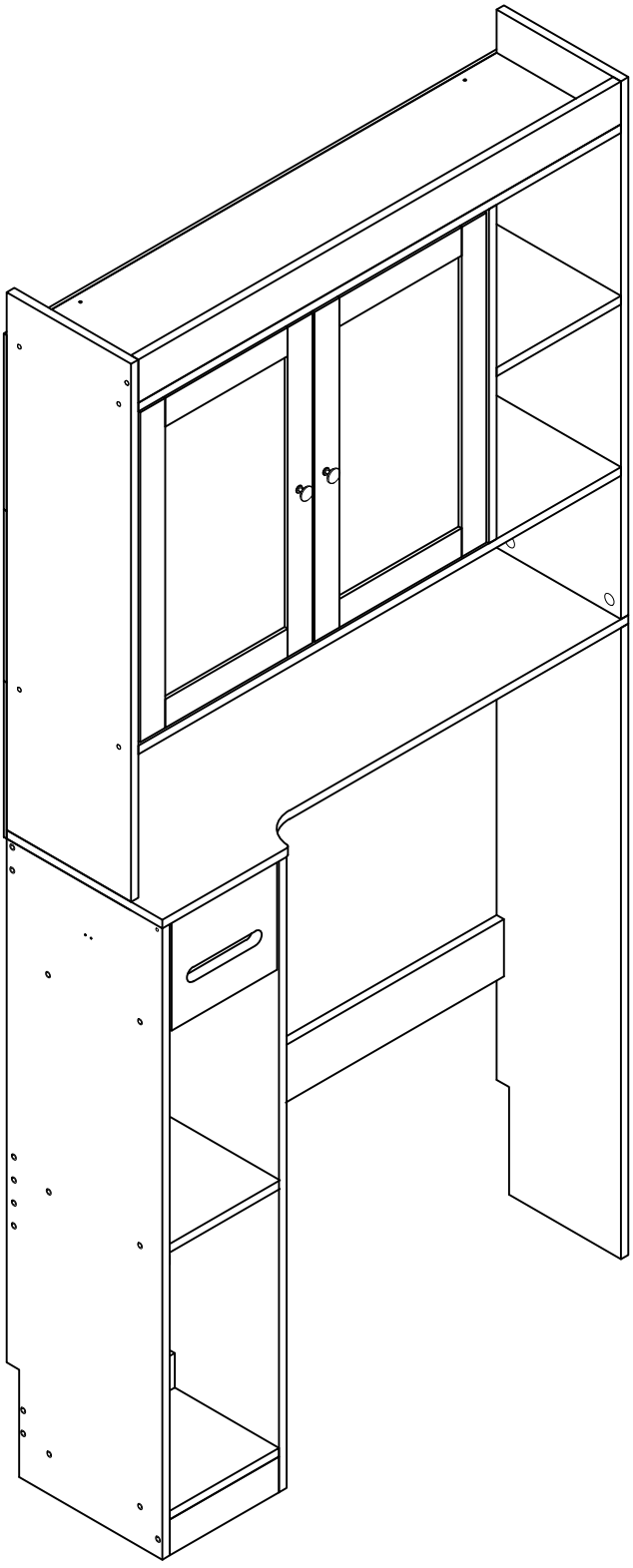

Option 1

ASSEMBLY

01

A X6 D X6 N F X2 K X4

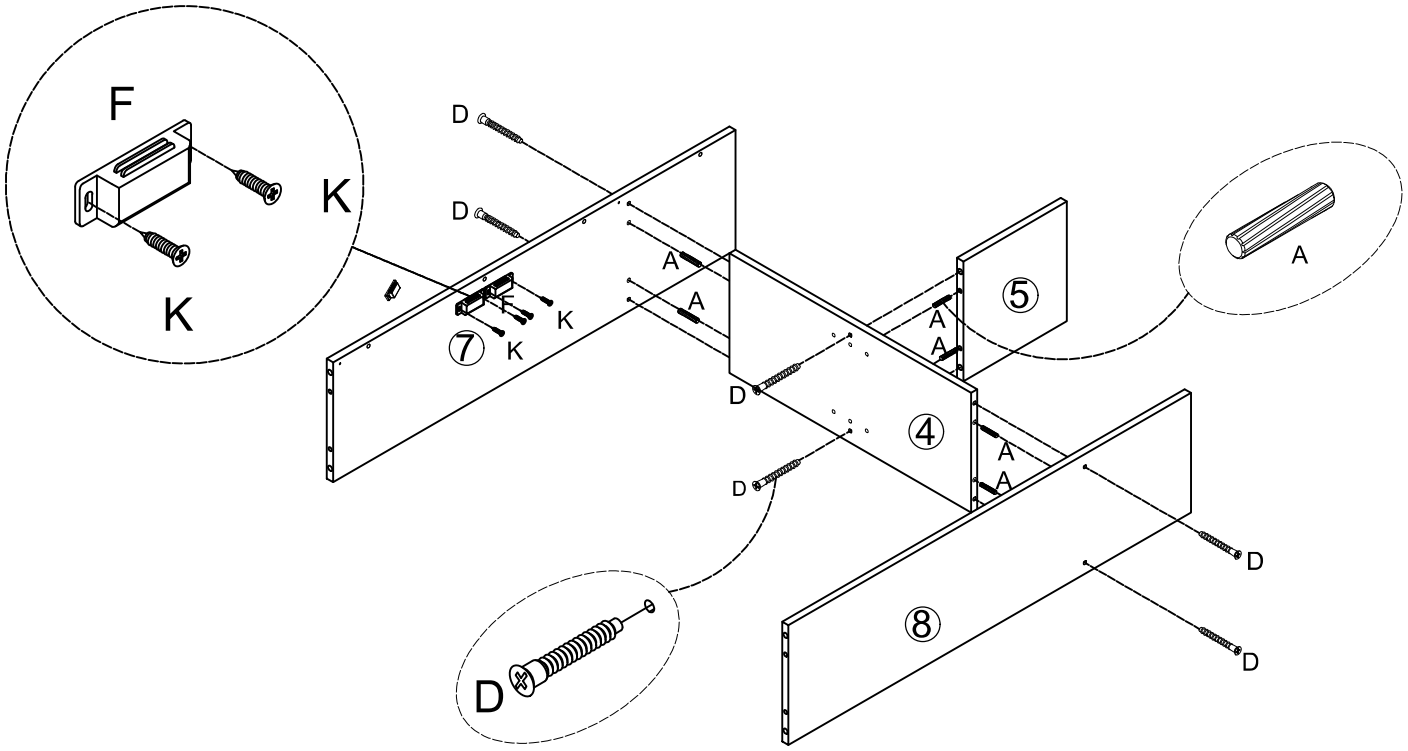

02

A X10 D X16 N

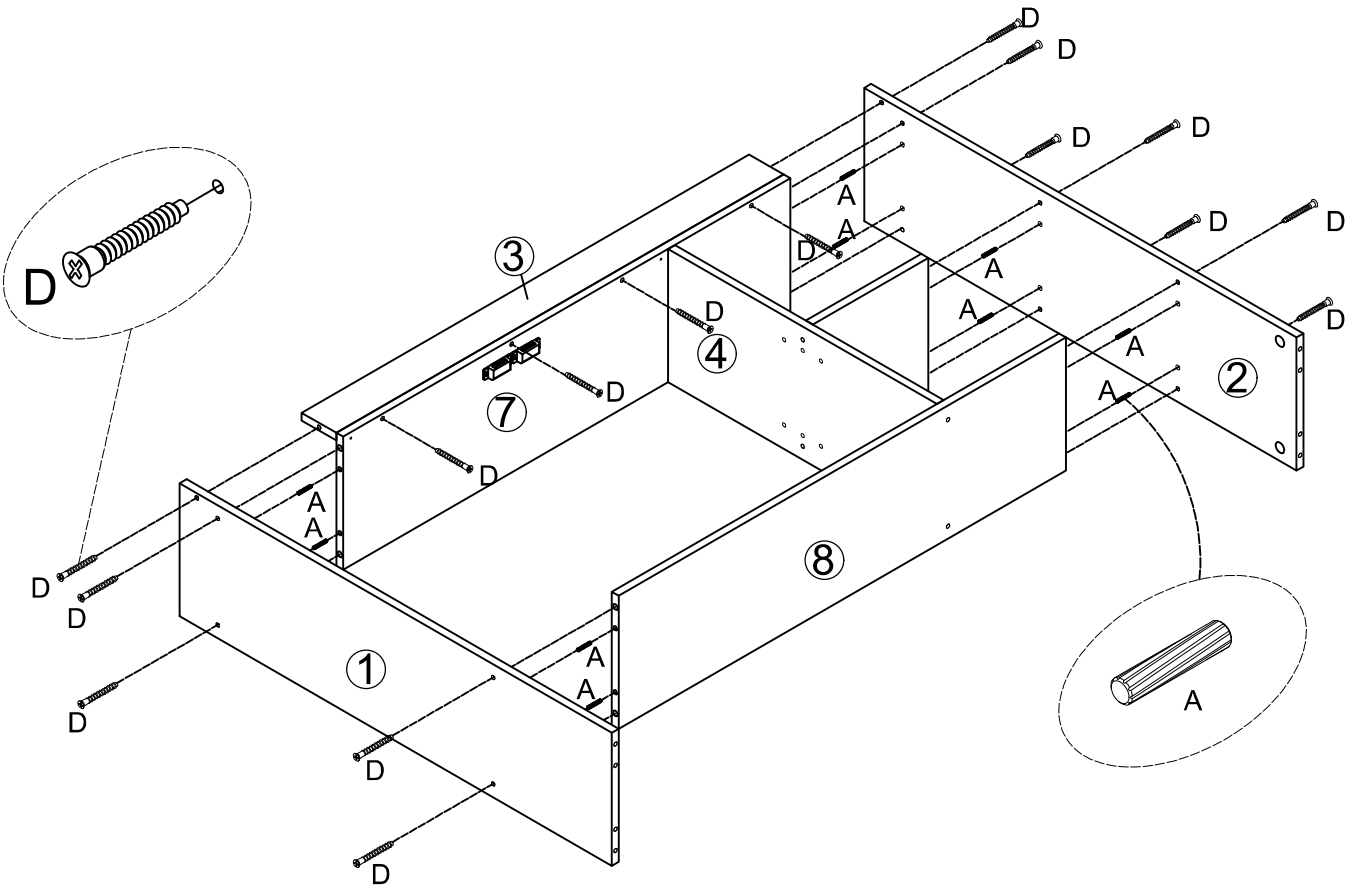

03

N

L X2

E X4

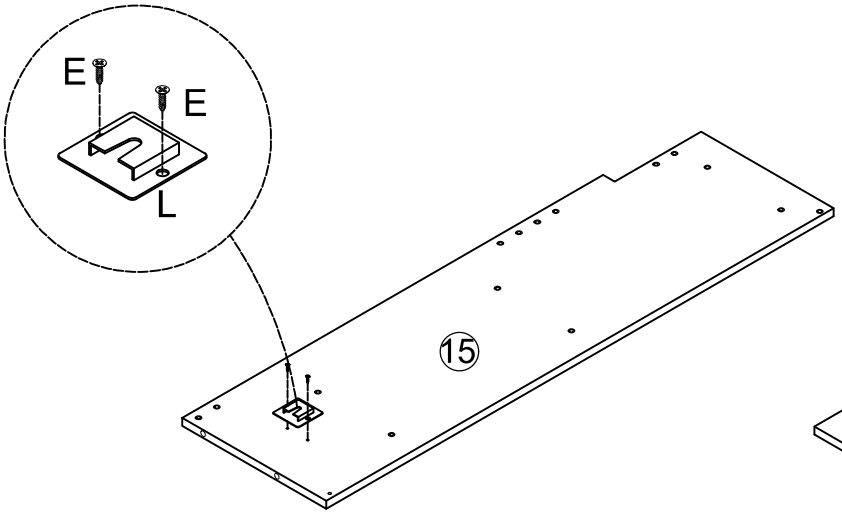

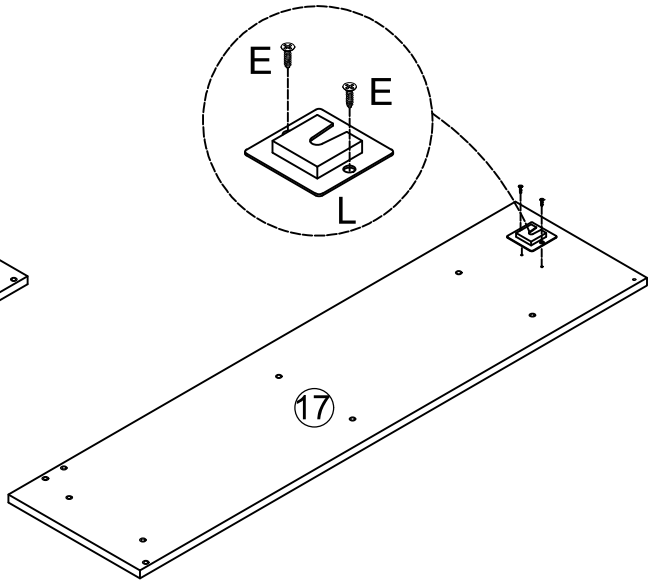

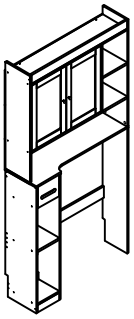

Lower shelf
on the left

OR

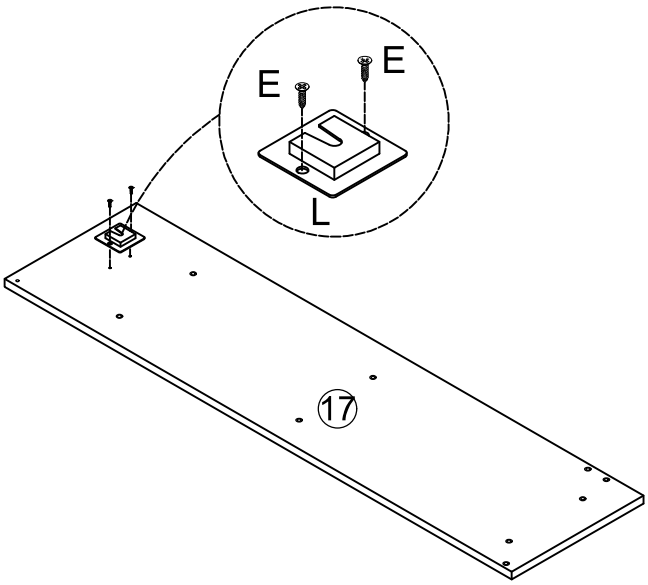

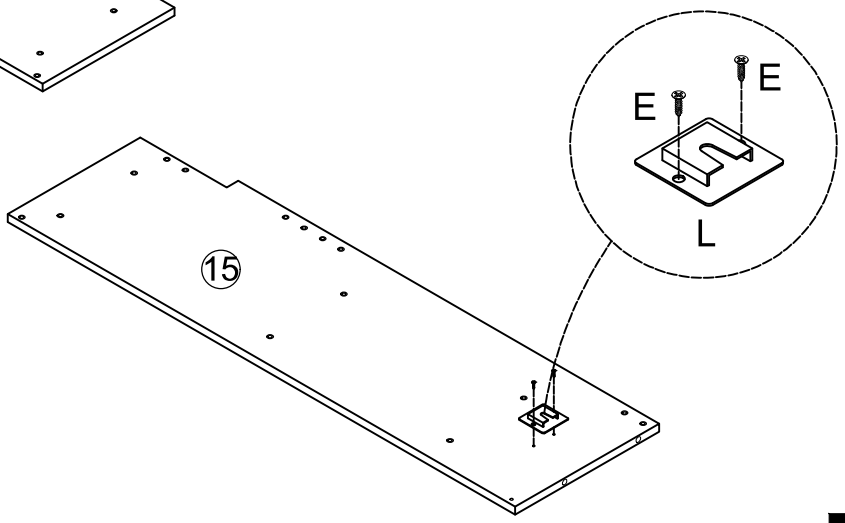

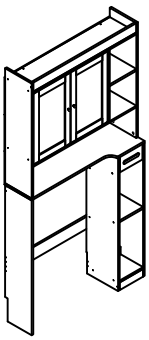

Lower shelf
on the right

04

D X 9 N F K X 2

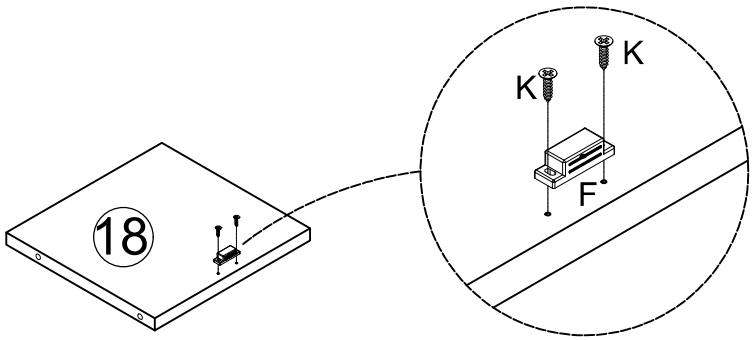

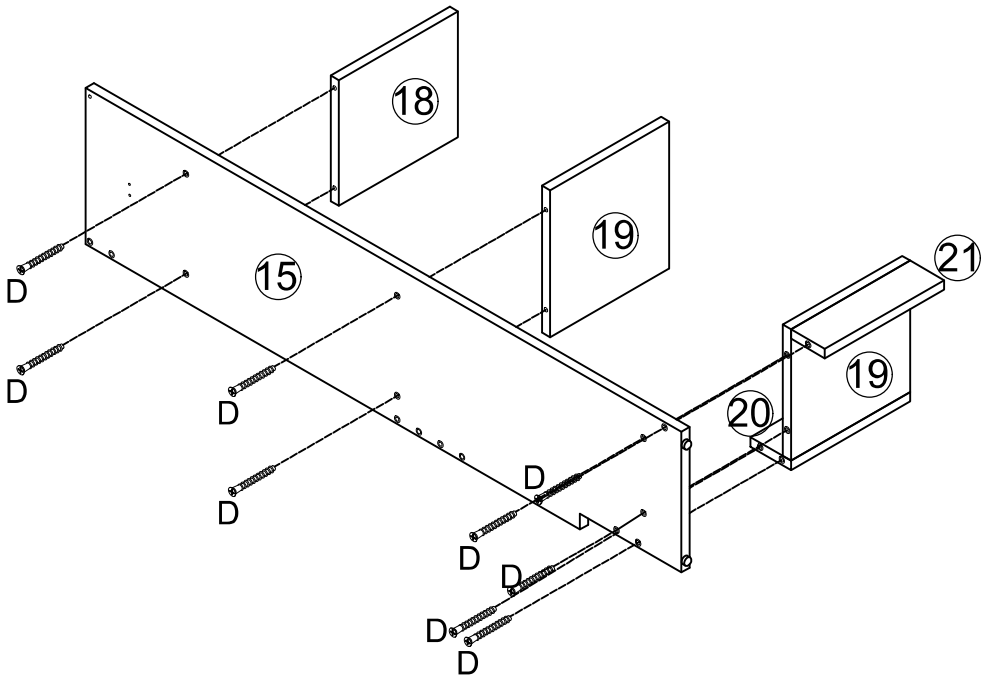

05

D X 9 N

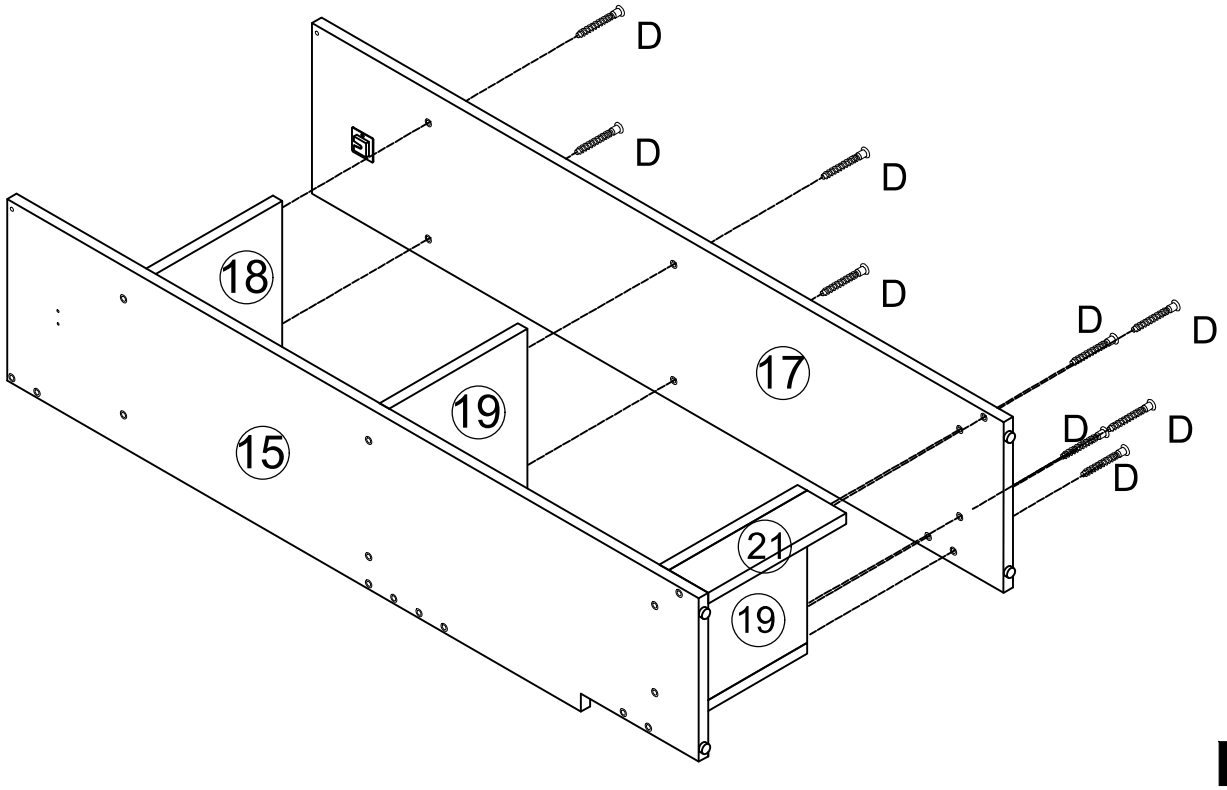

06

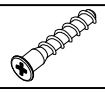

D x 8



N

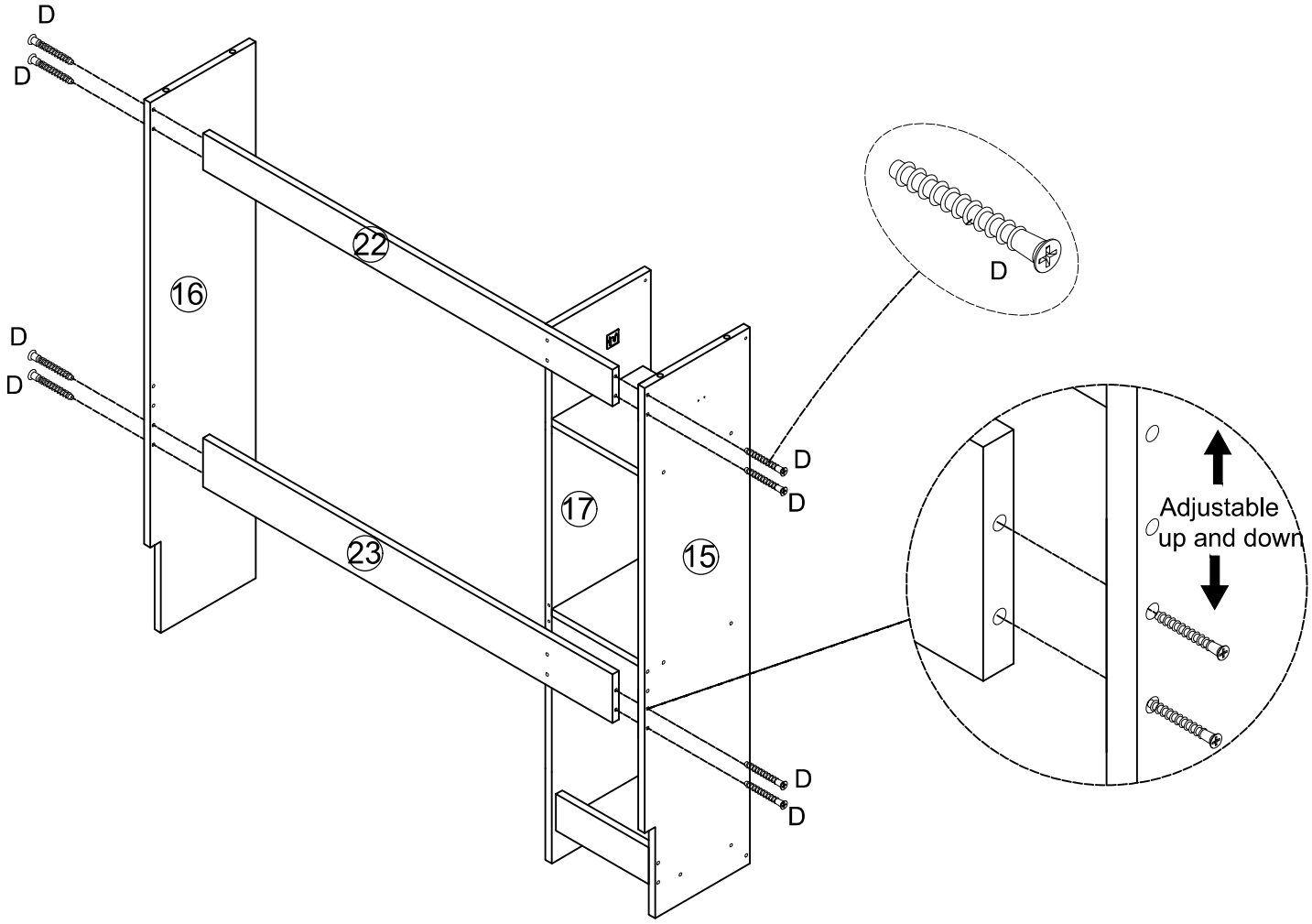

07

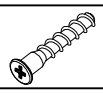

D x 4

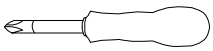

N

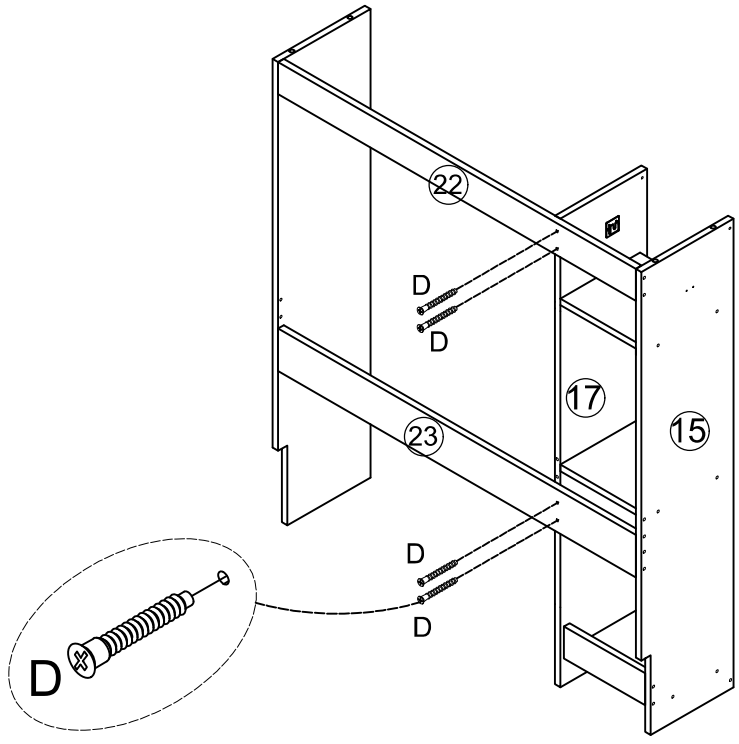

08

C X 4

N

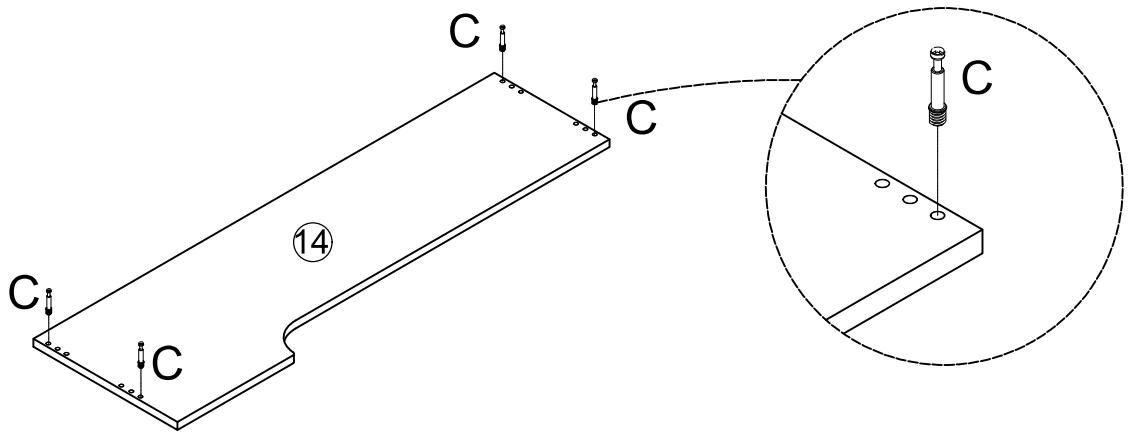

09

D X 4

N

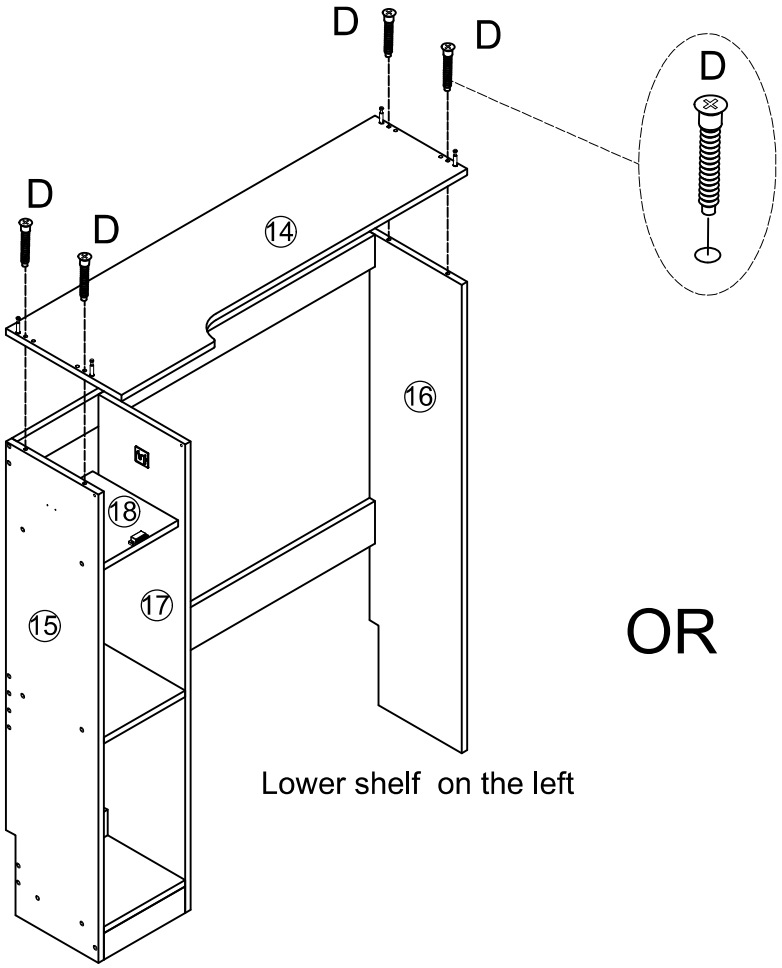

Lower shelf on the left

OR

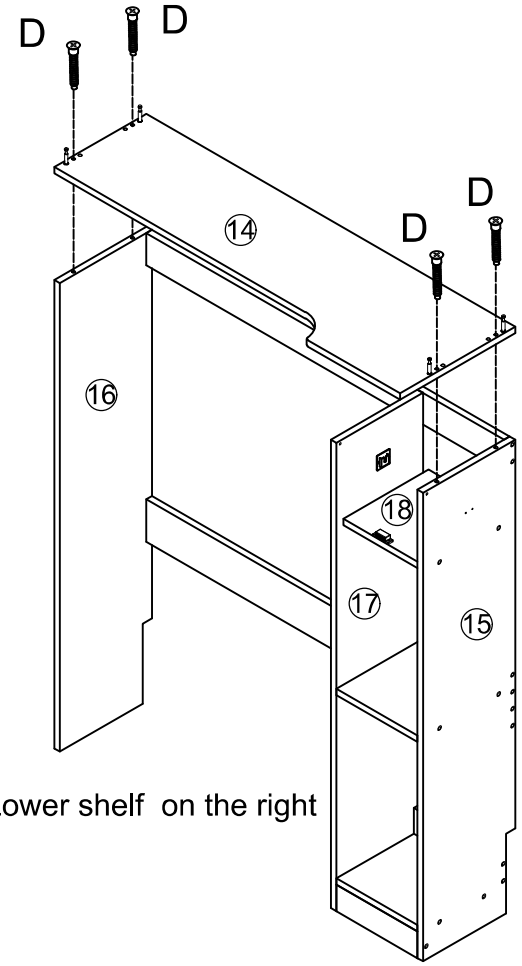

Lower shelf on the right

10

B X 4 N A X4

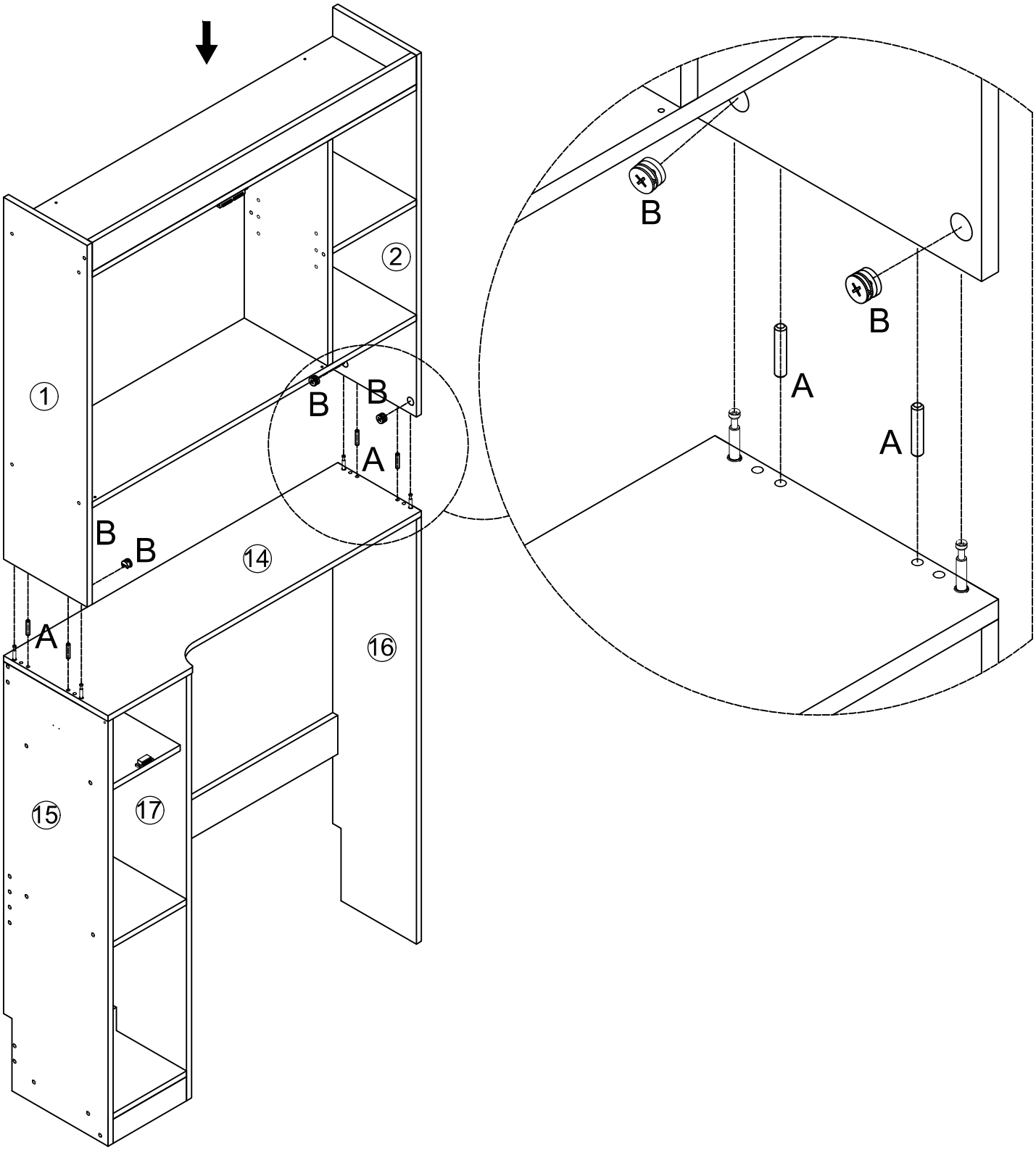

11

E X12

N

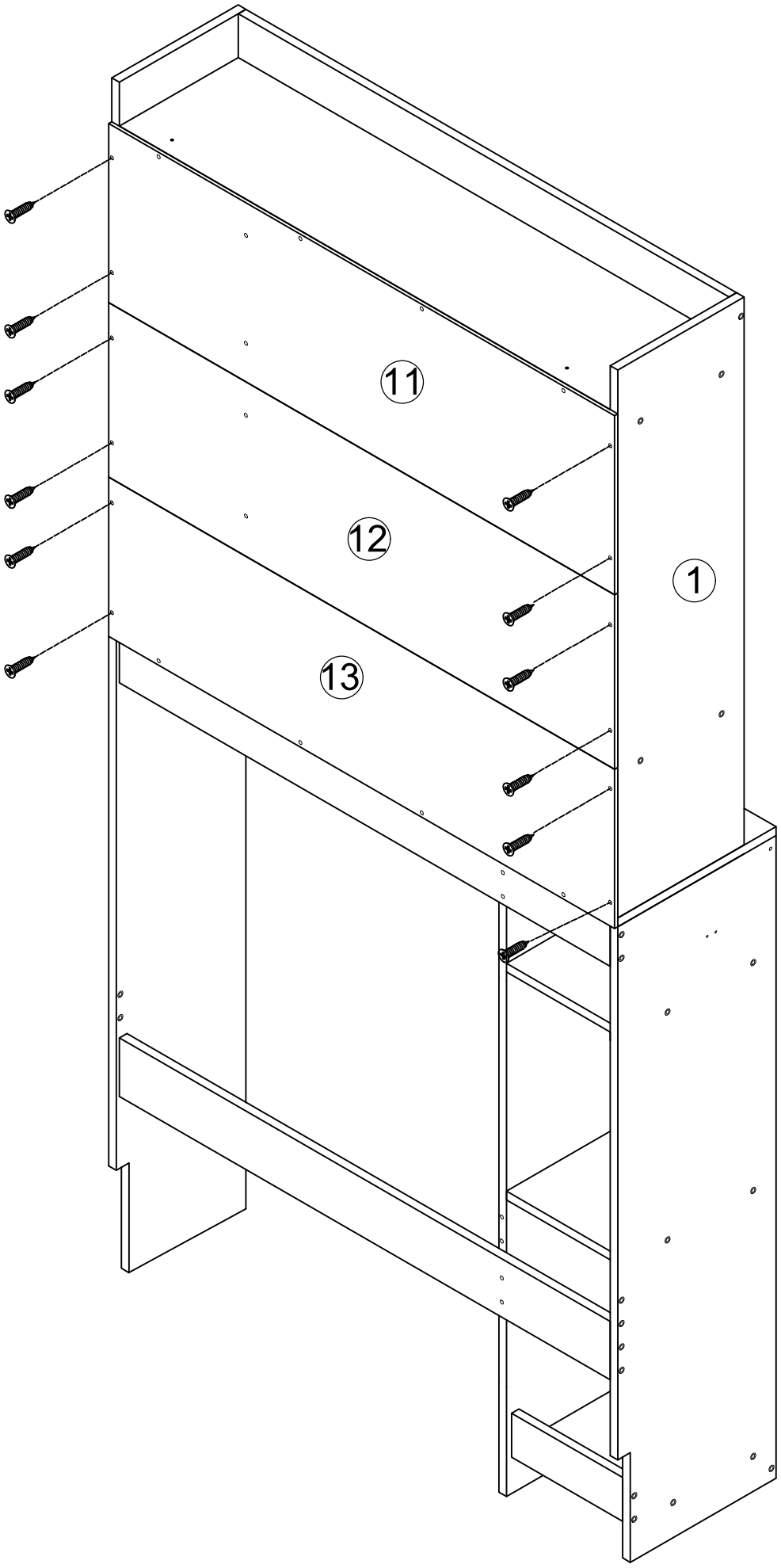

12

E X12

N

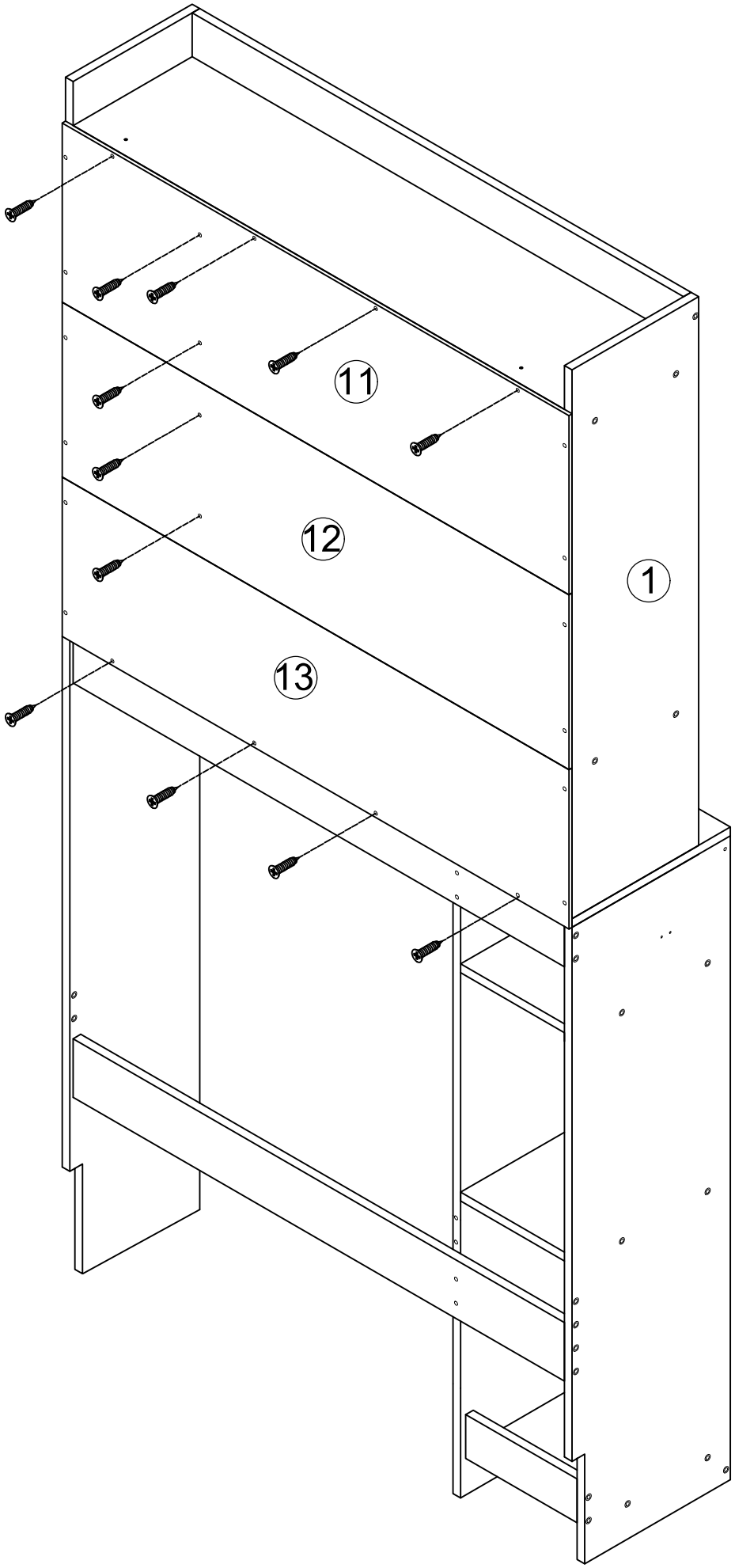

13

H x 4

N

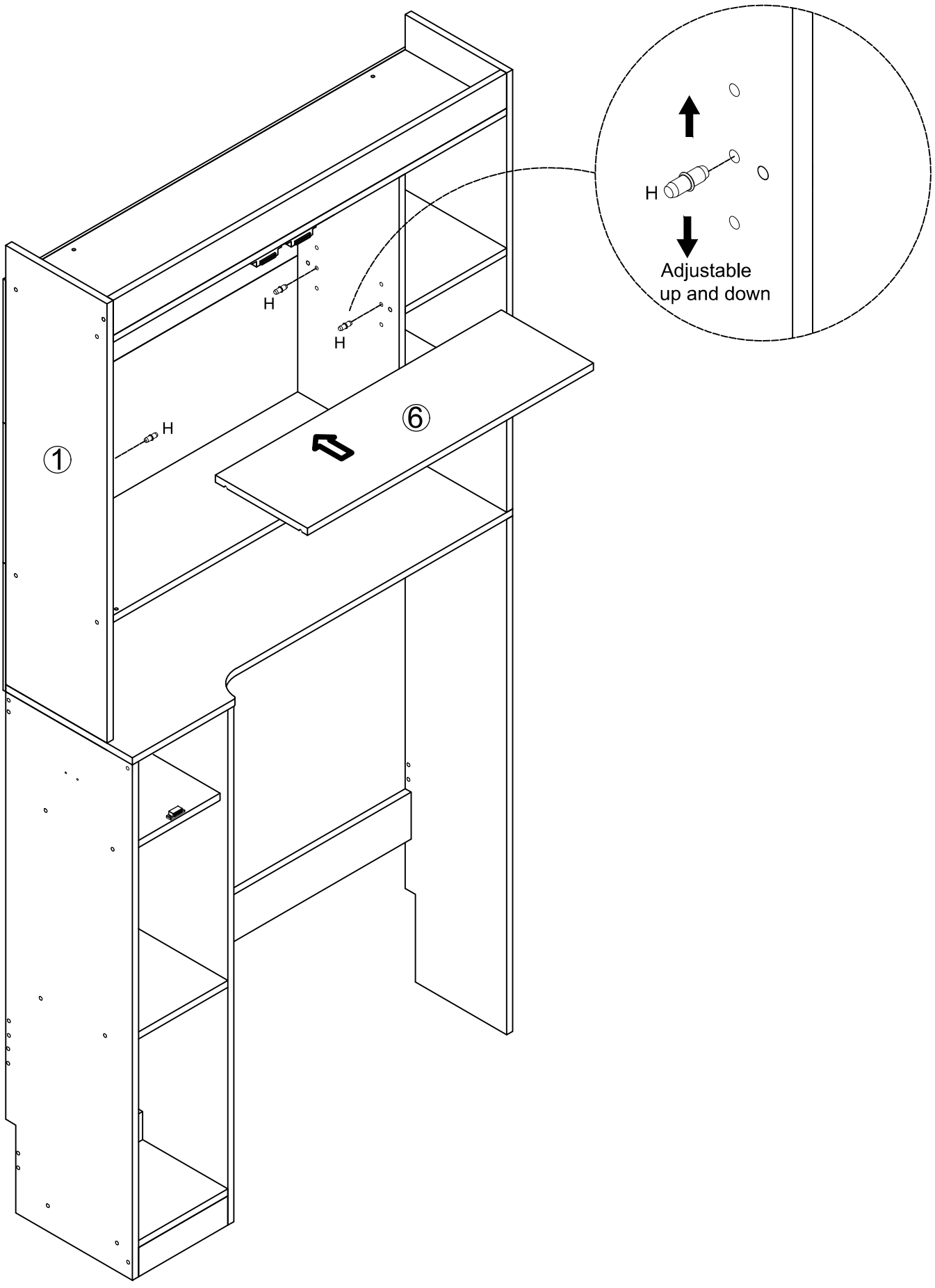

14

K X 4 F X 2 G X 4 I X 2 J X 2 N

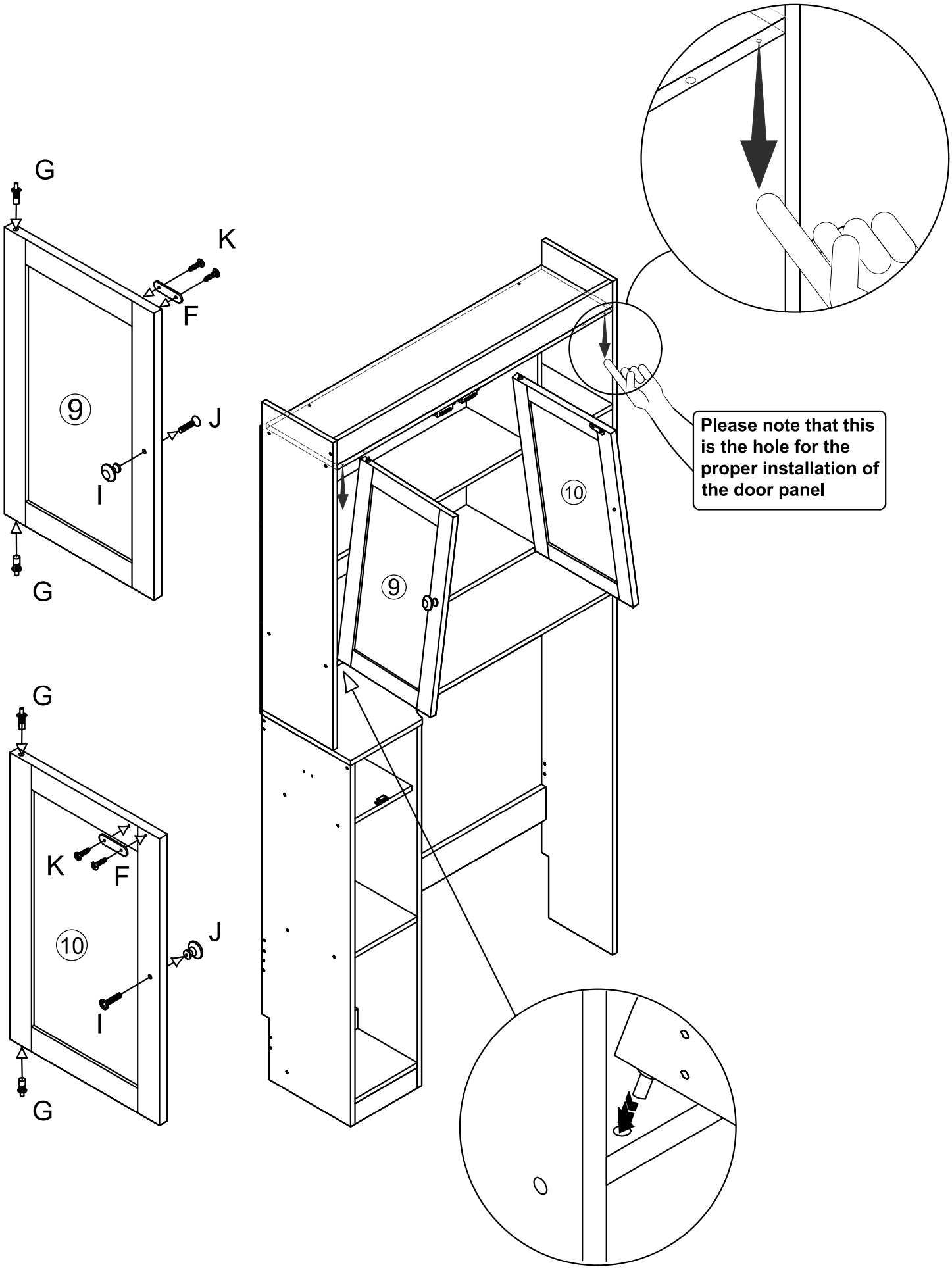

15 Q

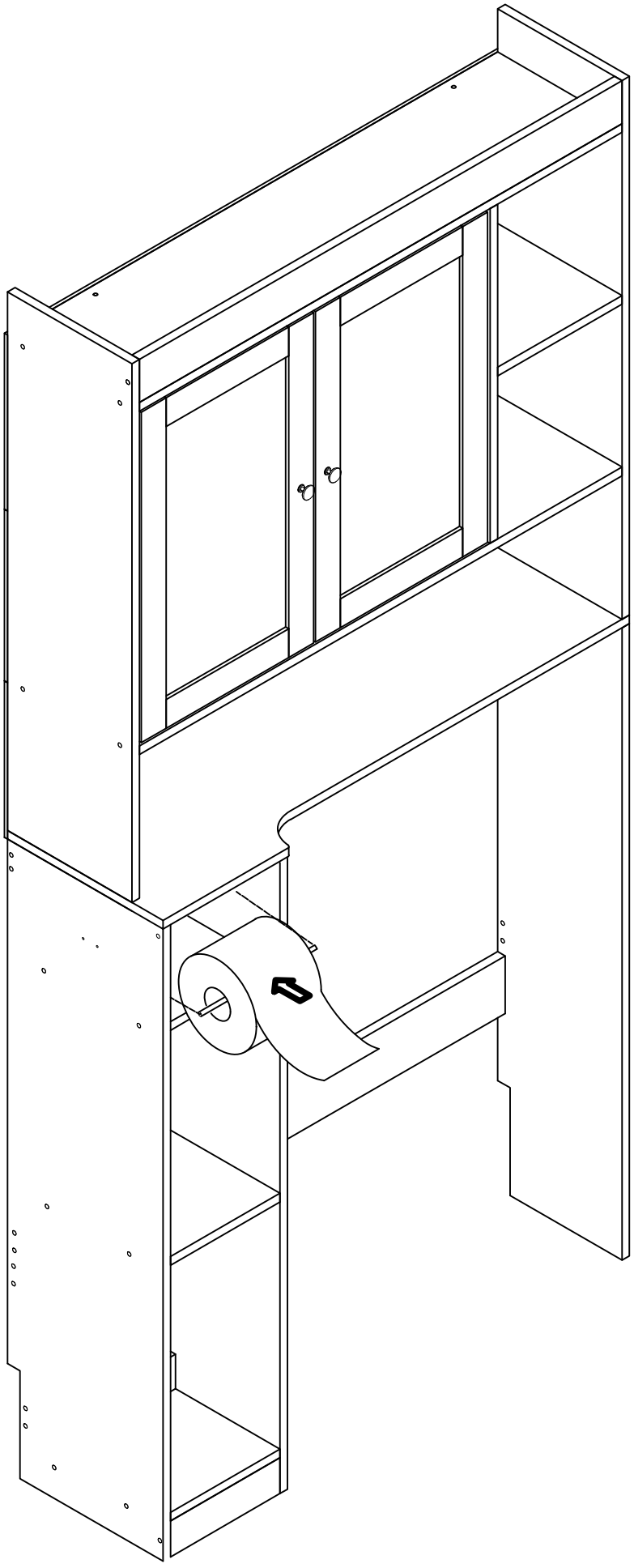

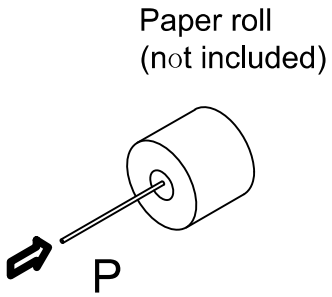

16

G X 2 F K X 2 N

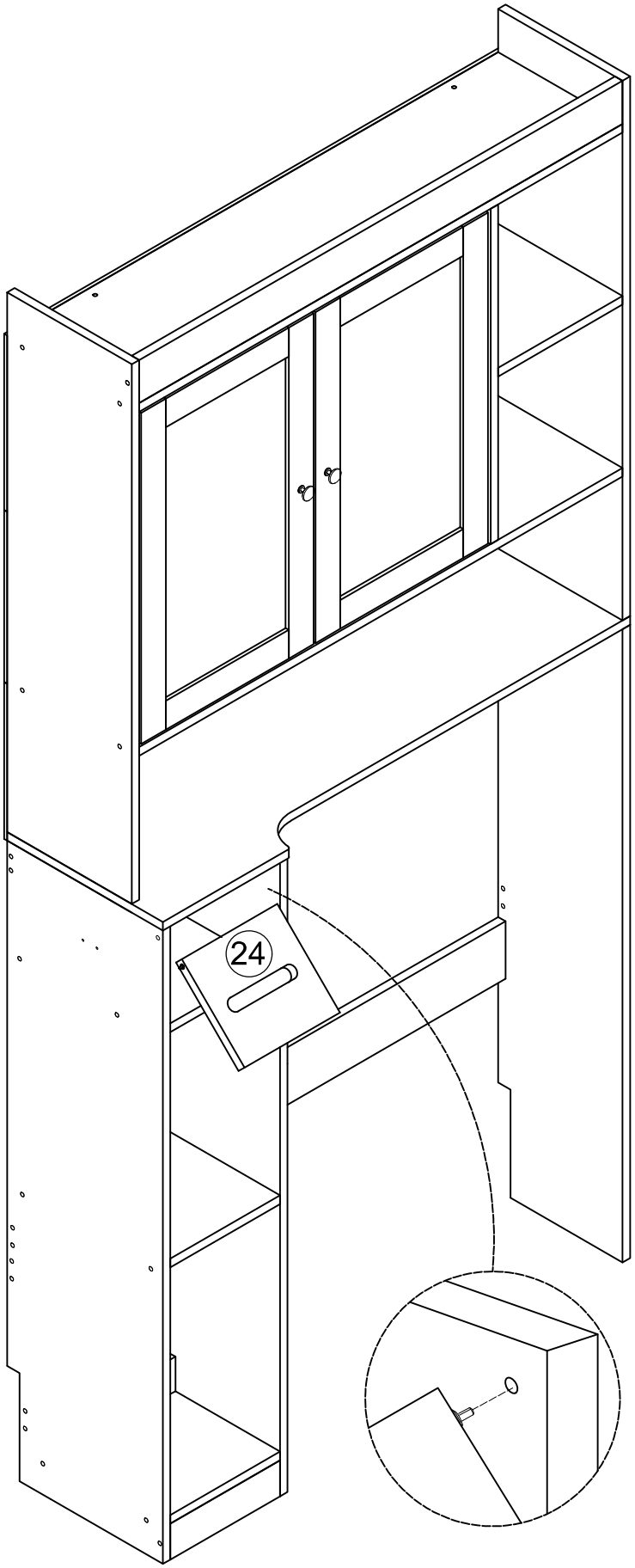

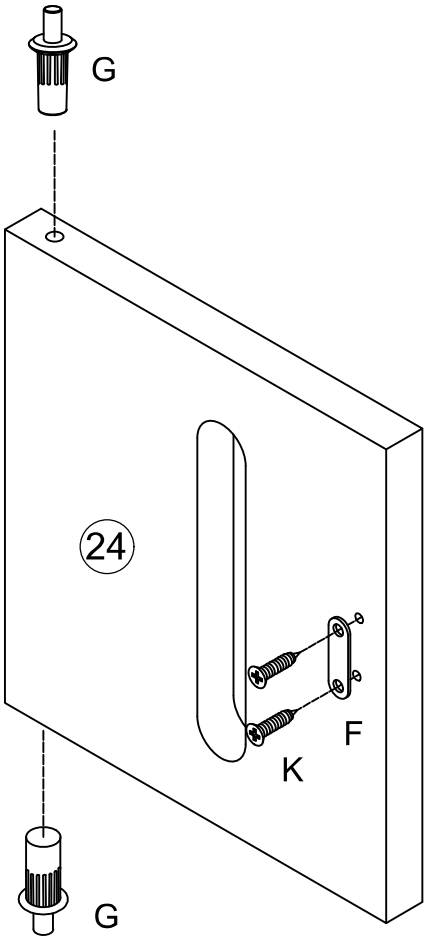

17 O x2

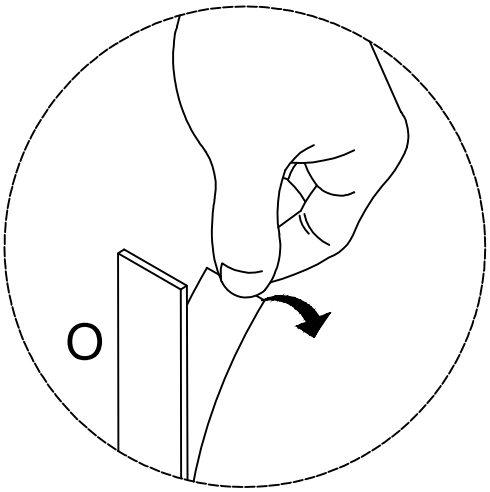

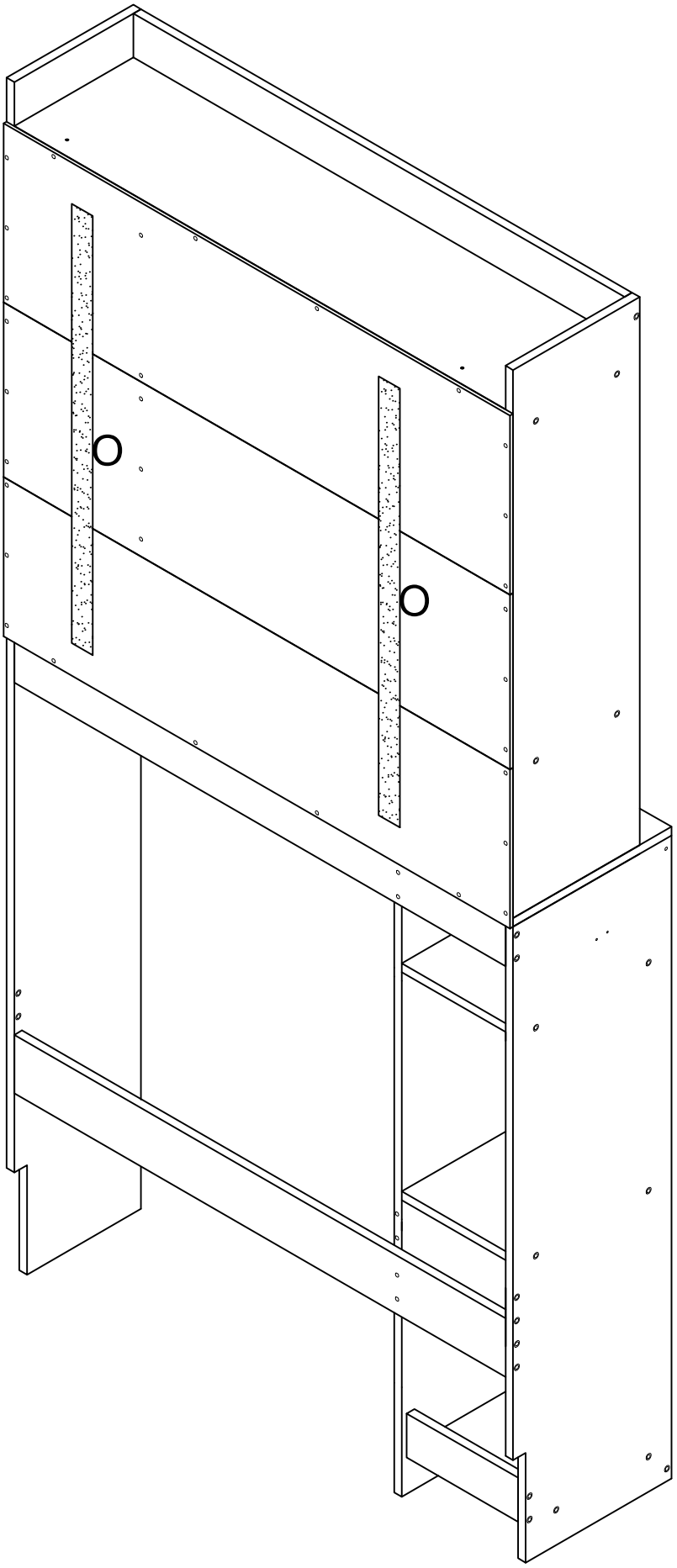

18

Q X 68+4

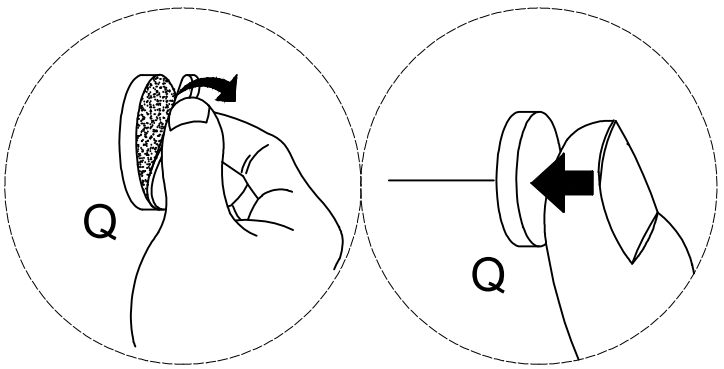

Attach the sticker to your needs.
The sticker easily falls sff after an exrended period of time.

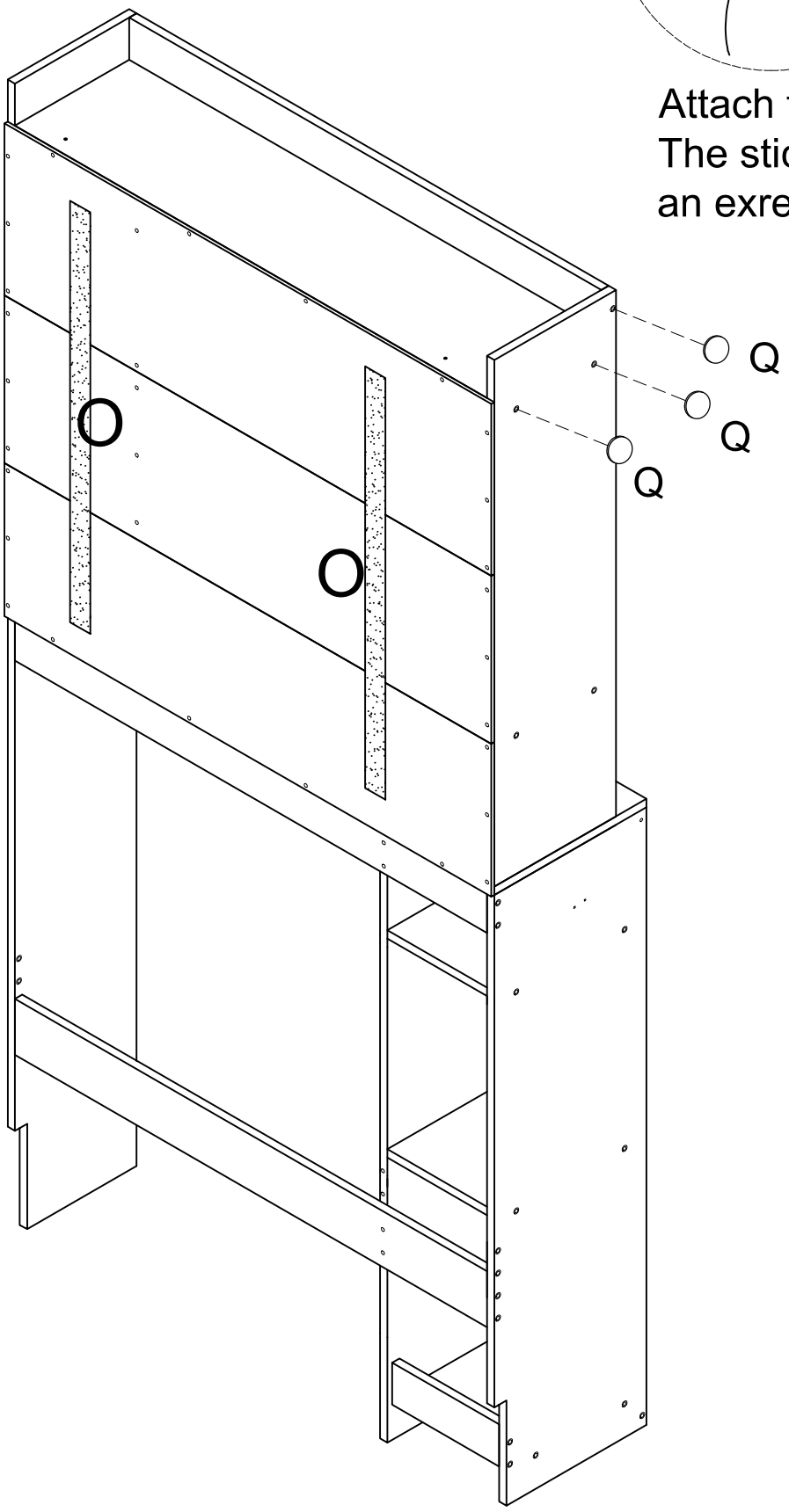

19

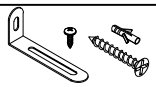

M x 2



N

