Bar Cabinet

Assembly Instructions-Please keep for future reference

SKU: N728P554772

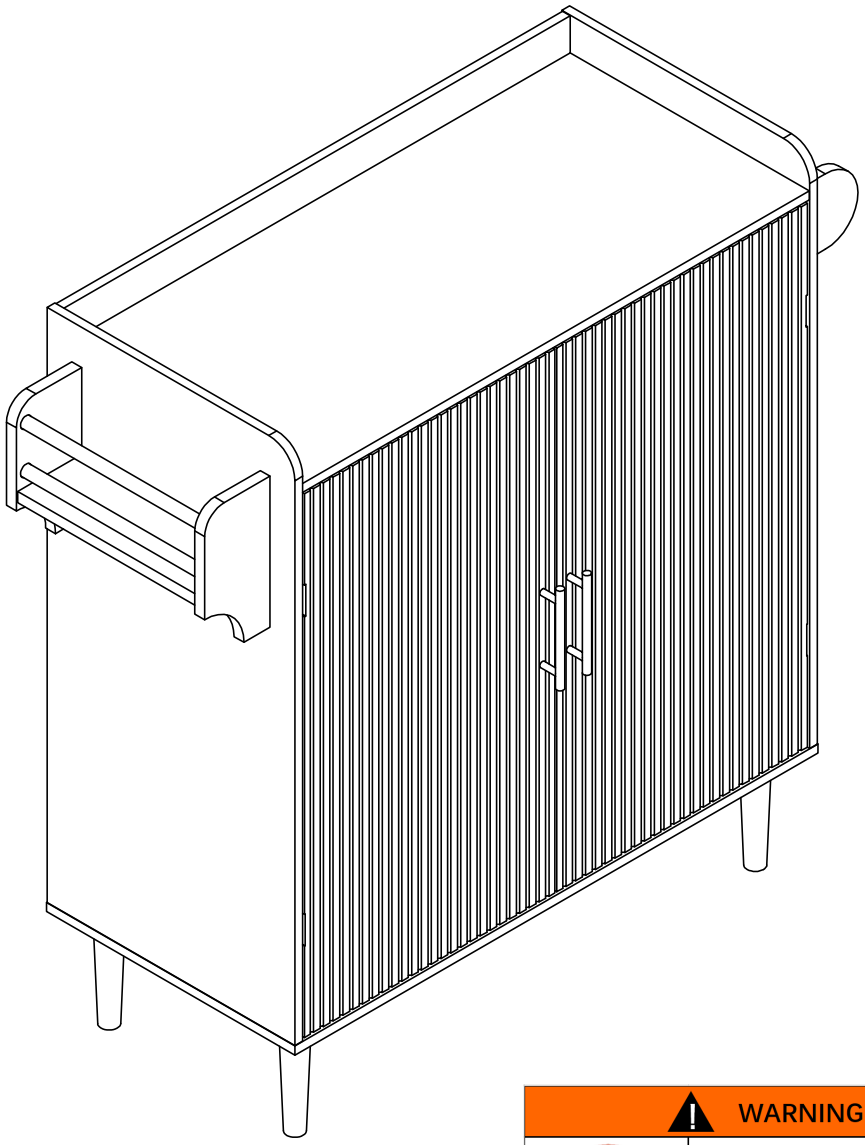

WARNING



This product is NOT a Clothing Storage Unit (CSU).
DO NOT use it for clothing storage.
Improper use may cause furniture tipover.

Important-Please read these instructions fully before starting assembly

Safety and Care Advice

Important – Please read these instructions fully before starting assembly

• Check you have all the components and tools listed on the following pages.

• Remove all fittings from the plastic bags and separate them into their groups.

• Keep children and animals away from the work area, small parts could choke if swallowed.

• Make sure you have enough space to layout the parts before starting.

• During assembly do not stand or put weight on the product, this could cause damage.

• Assemble the item as close to its final position (in the same room) as possible.

• Assemble on a soft level surface to avoid damaging the unit or your floor.

• Parts of the assembly will be easier with 2 people.



• To reduce the likelihood of damaging your product please ensure that your power drill is set on a low torque setting.

Care and maintenance

• Only clean using a damp cloth and mild detergent, do no use bleach or abrasive cleaners.

• From time to time check that there are no loose screws on this unit.

• This product should not be discarded with household waste. Take to your local authority waste disposal centre.

Handy Hints

• Assemble all parts and bolts loosely during assembly, only once the product is complete should you fully tighten the bolts

• Regularly check and ensure That all bolts and fittings are tightend properly.

WARNING
In order to help prevent overturning – please follow these instructions

To help prevent product toppling over please follow the below steps:-

Use the anti tip stap or wall fixing method provided (if applicable)
Do not allow children to climb or hang on the furniture
Do not open more than one drawer at a time
Do not place heavy items in the top drawers
Do not place heavy items on top of the furniture, unless the furniture has been designed for this purpose

Using Camlocks

Step 1

Connect the male camlock as diected in the assembly instructions using a scewdriver.

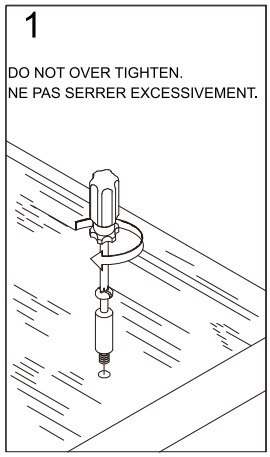

Step 2

Push the male camlock into the entry hole.

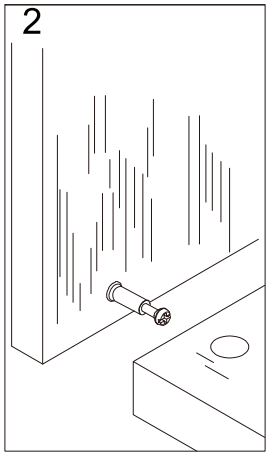

Step 3

Insert the female camlock as shown in the instruction.

Note: ensure that the arrow on the top of the camlock points towards the entry hole for the male camlock.

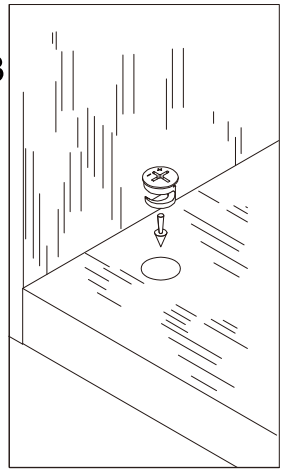

Step 4

Turn the female camlock clockwise with a screwdriver.

You should feel a click when the camlock is locked in place.

The joint is now secure.

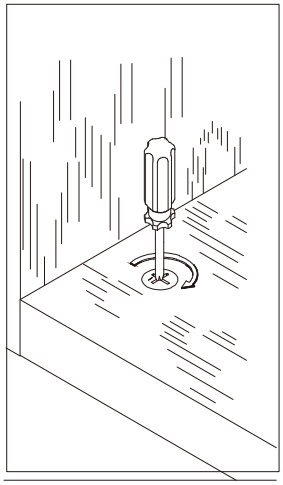

Components - Fittings

Please check you have all the panels listed below

Note:The quantities below are the correct amount to complete the assembly. In some cases, more fittings may be supplied than required.

A 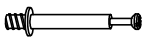 Cam Bolt x40	B  Cam Lock x40	C 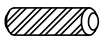 8x30mmDowel x30	D 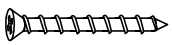 4x40mm Screw x17
E  3.5x12mm Screw x22	F 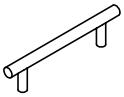 Pull handle x2	G  M7X40mm Screw x8	H  Screw 3x12mm 40
I  screw 4x25mm x4	J  Backplate buckle x8	K 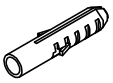 Expanding plastic x2	L  Screwdriver x1
M 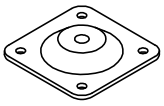 Four-hole iron sheet x4	N 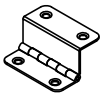 Three-fold hinge x4	O  Layered board support x4	P 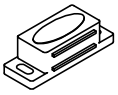 Magnetic collision x2
Q  Iron sheet x2	R  position label x40	S  Wrench M4X55MM x1	T  Anti-fall iron plate x2
CL 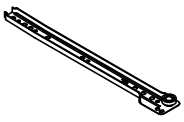 Left sliding rail base rail x1	CR 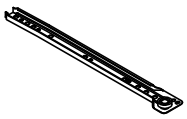 Left slide rail and guide rail x1	DL  Right sliding rail base rail x1	DR 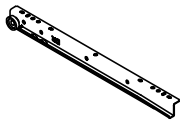 Right sliding rail and guide rail x1

Assembly Instructions

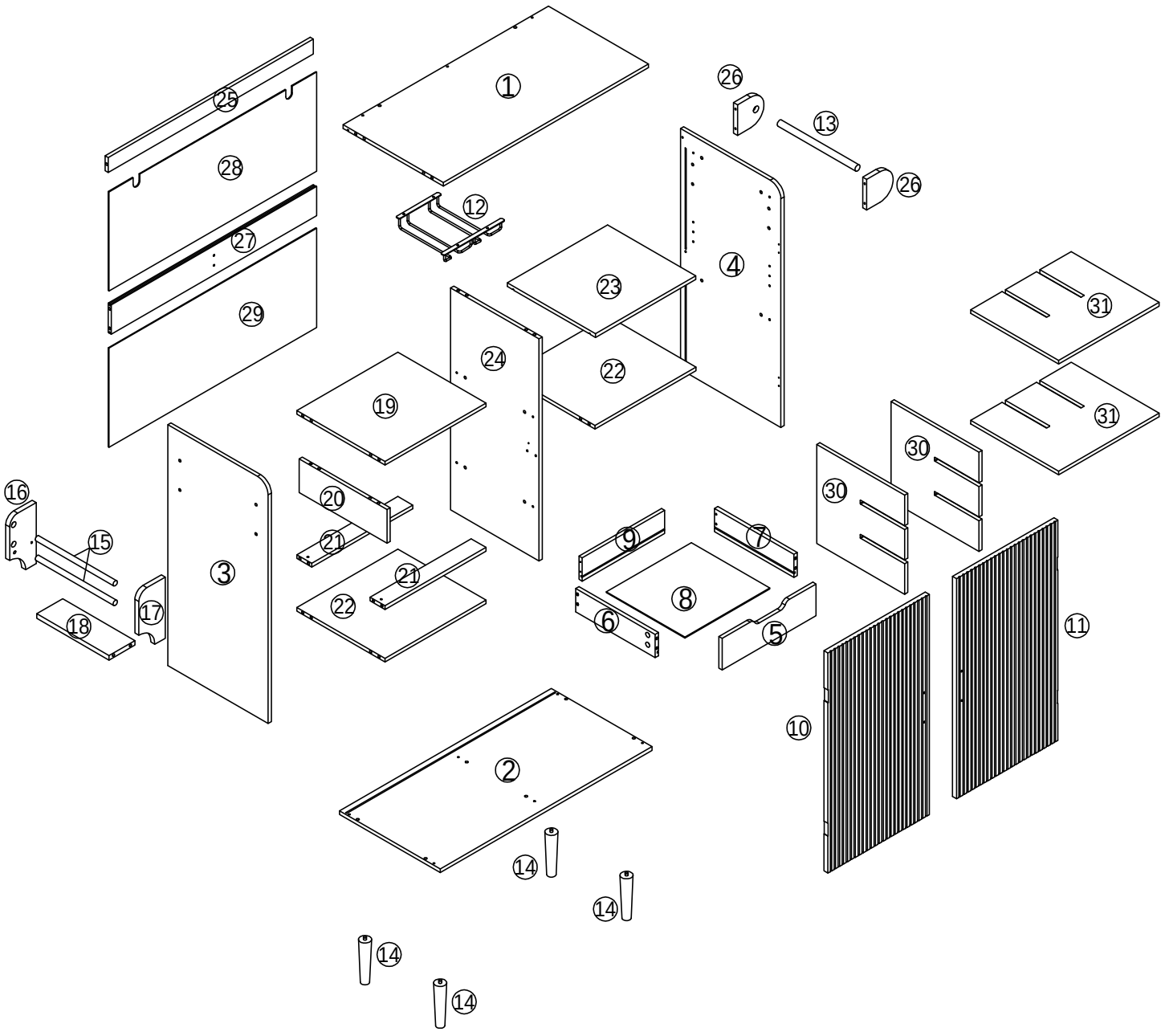

Assembly Instructions

SKU:N728P554772

1 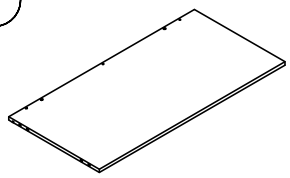 1PC	2 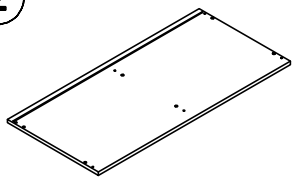 1PC	3 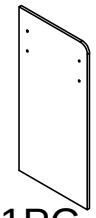 1PC
4 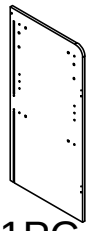 1PC	5 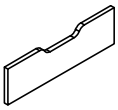 1PC	6 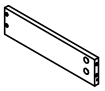 1PC
7 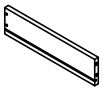 1PC	8 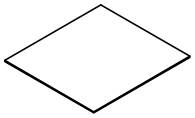 1PC	9 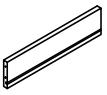 1PC
10  1PC	11  1PC	12 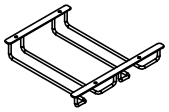 1PC
13 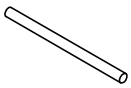 1PC	14  4PCS	15 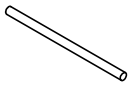 2PCS
16 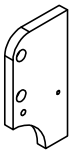 1PC	17 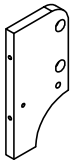 1PC	18 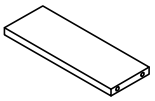 1PC

Assembly Instructions

SKU:N728P554772

19 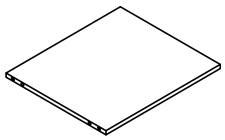 1PC	20 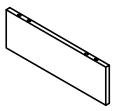 1PC	21 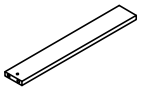 2PCS
22 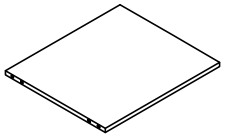 2PCS	23 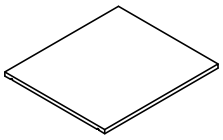 1PC	24 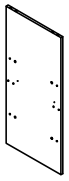 1PC
25 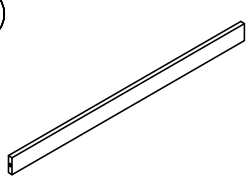 1PC	26  2PCS	27 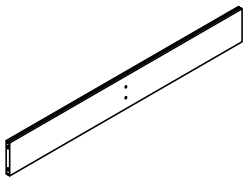 1PC
28 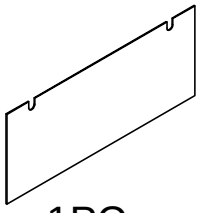 1PC	29 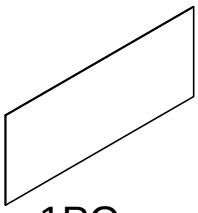 1PC	30 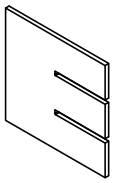 2PCS
31 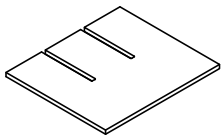 2PCS		

Assembly Instructions

A 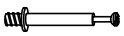	Cam Bolt x2
E 	3.5x12mm Screw x4
H 	Screw 3x12mm x4
P 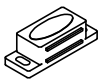	Magnetic collision x2

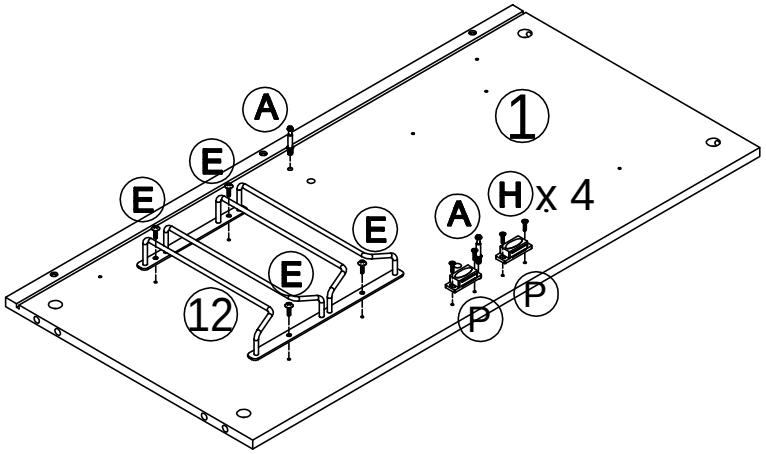

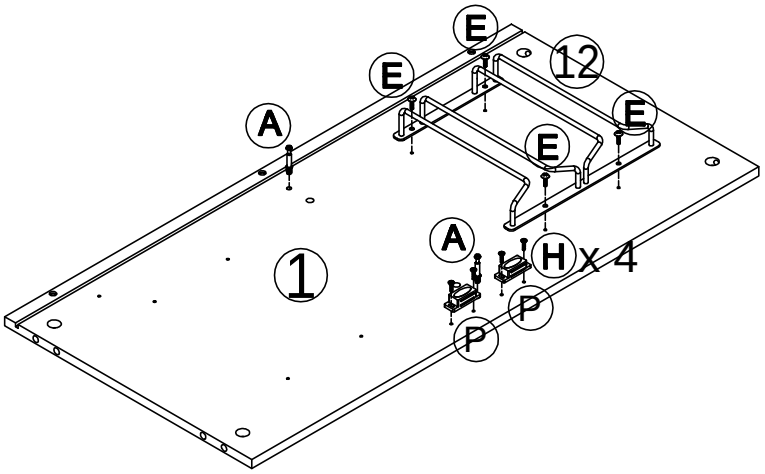

The 12th wine rack can be installed on the left or the right. The subsequent steps are as follows: install the wine rack on the left. The steps for installing the wine rack on the right are exactly the same as those on the left.

Step 1

Assembly Instructions

A 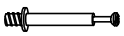	Cam Bolt x2
C 	8x30mmDowel x2
D 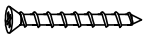	4x40mm Screw x3
H 	Screw 3x12mm x2
CL 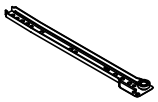	Left sliding rail base rail x1

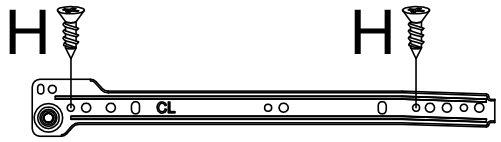

CL

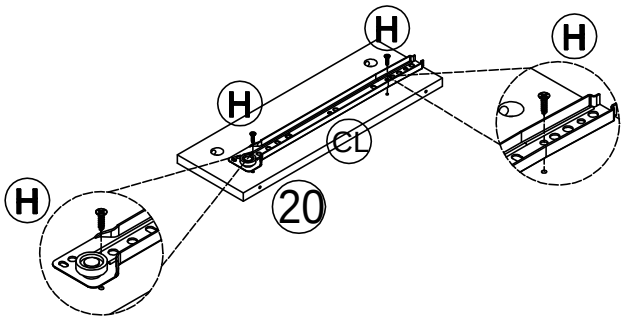

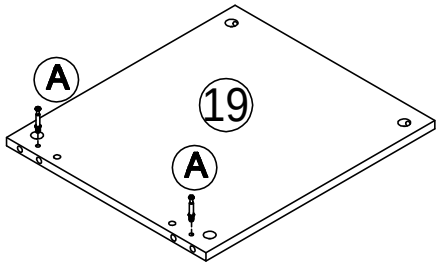

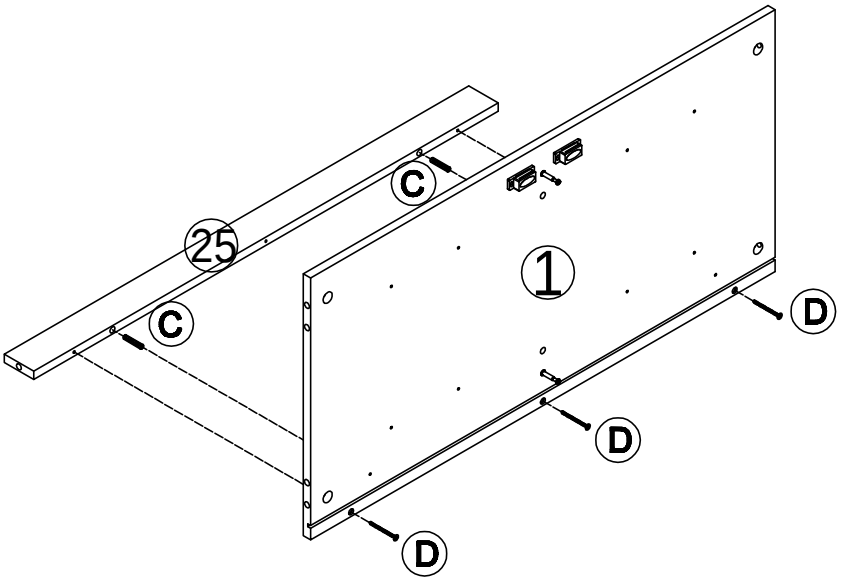

Step 2

Assembly Instructions

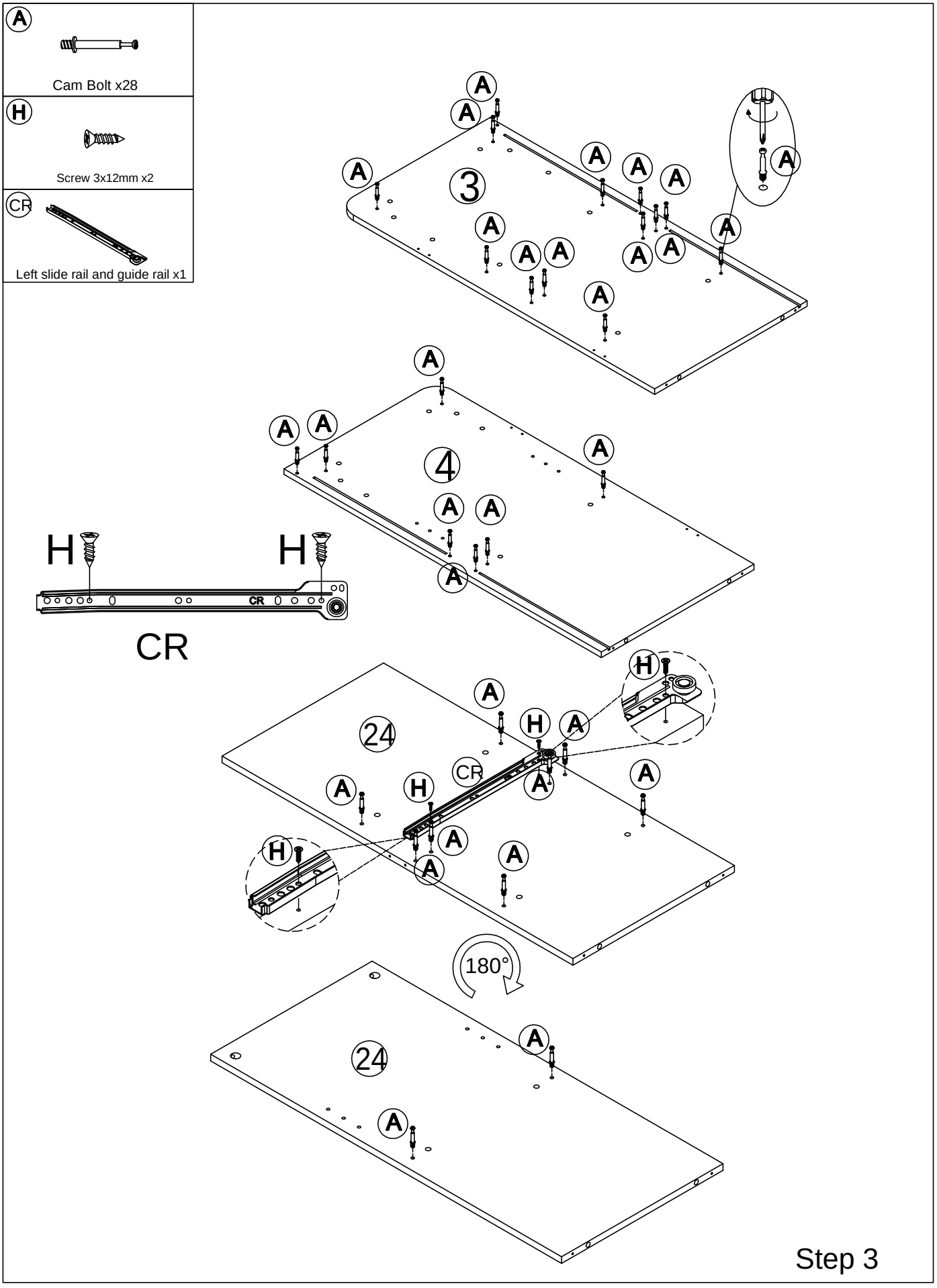

Step 3

Assembly Instructions

B	Cam Lock x10
C	8x30mmDowel x6
D	4x40mm Screw x2
R	position label x10

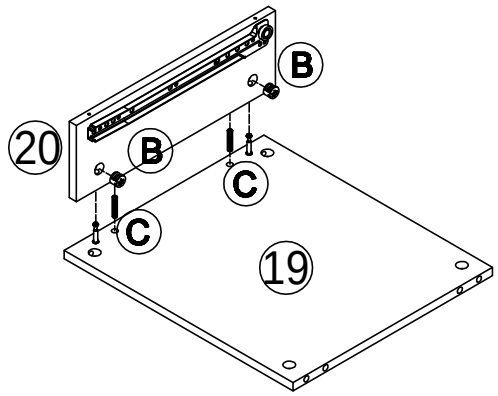

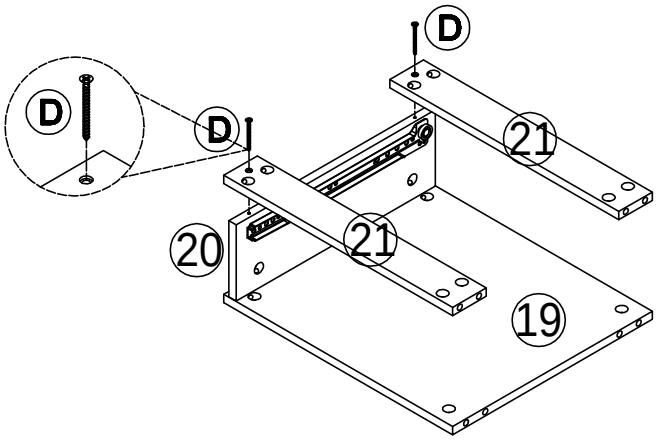

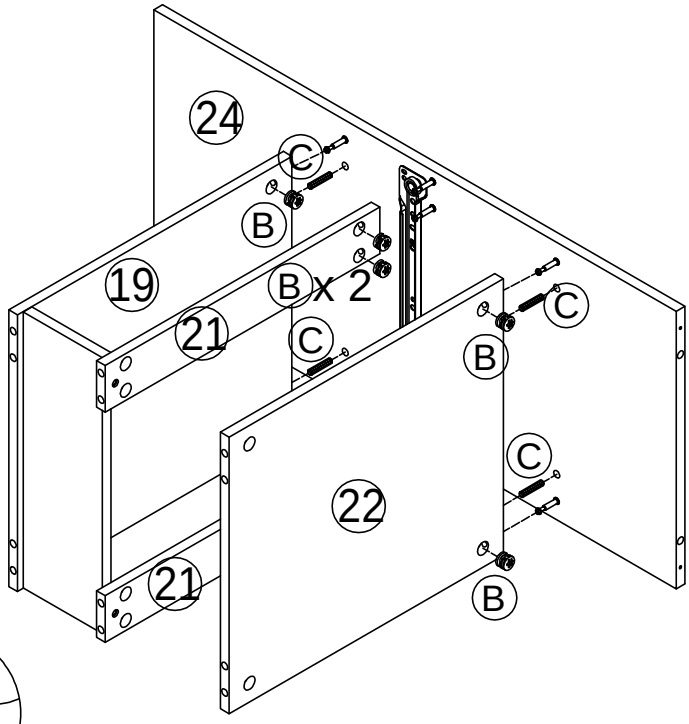

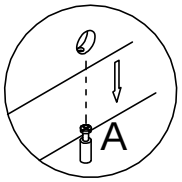

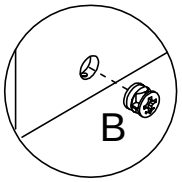

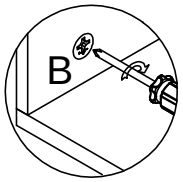

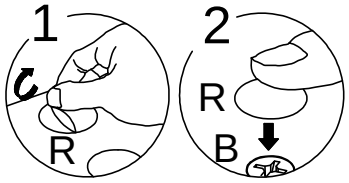

Step 4

Assembly Instructions

B	Cam Lock x2
C	8x30mmDowel x2
D	4x40mm Screw x2
R	position label x2

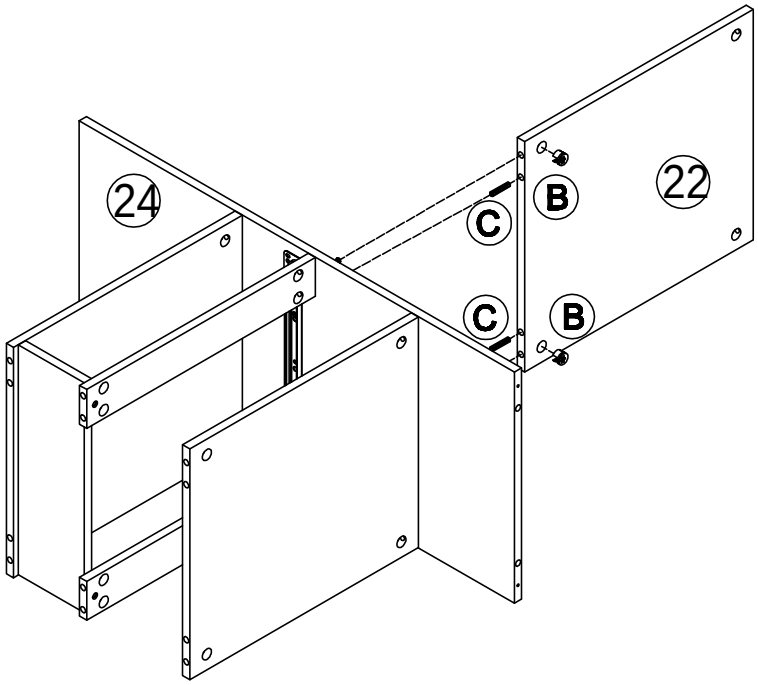

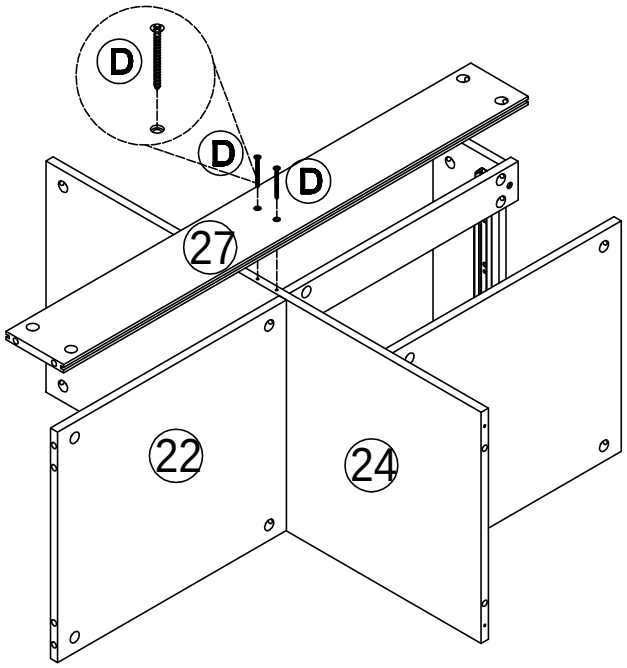

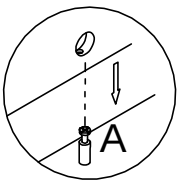

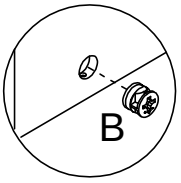

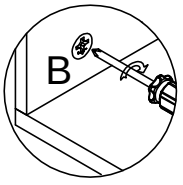

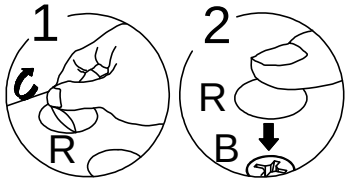

Step 5

Assembly Instructions

B  Cam Lock x12
C  8x30mmDowel x8
R  position label x12

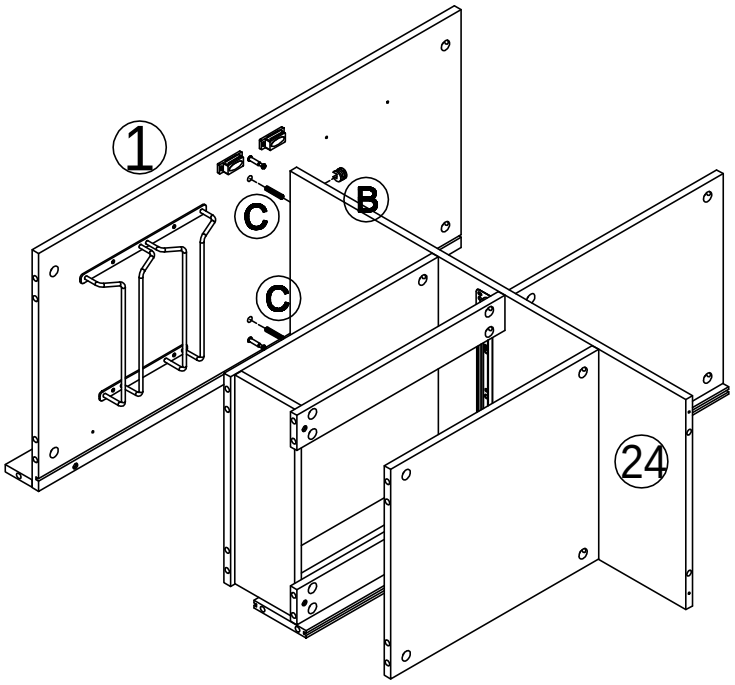

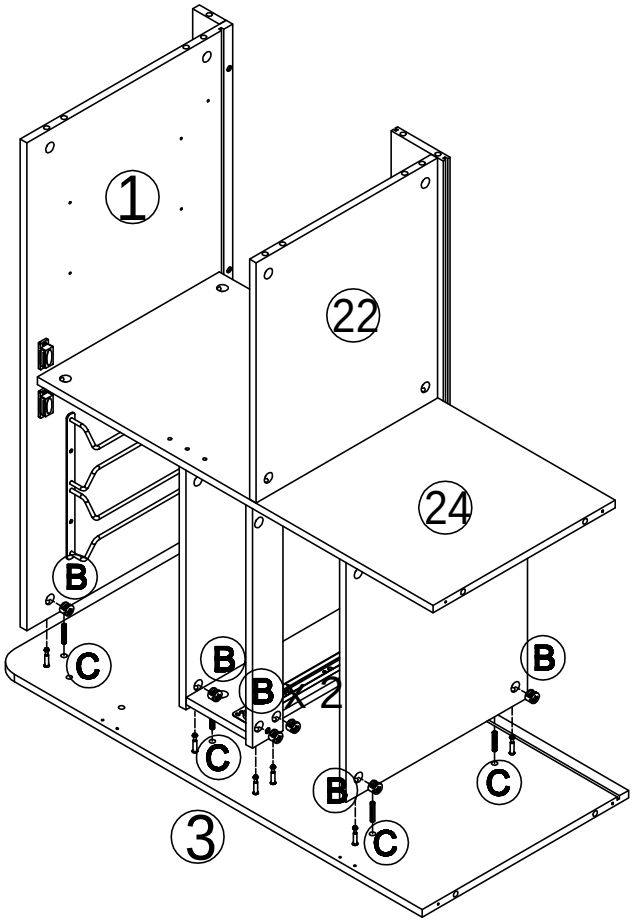

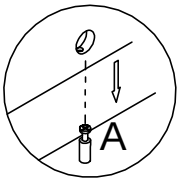

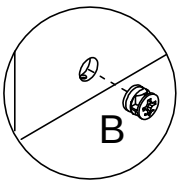

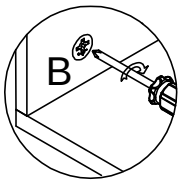

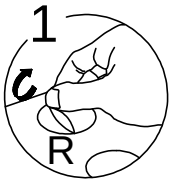

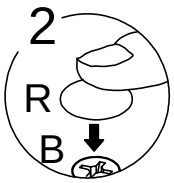

Step 6

Assembly Instructions

B	Cam Lock x4
C	8x30mmDowel x4
R	position label x4

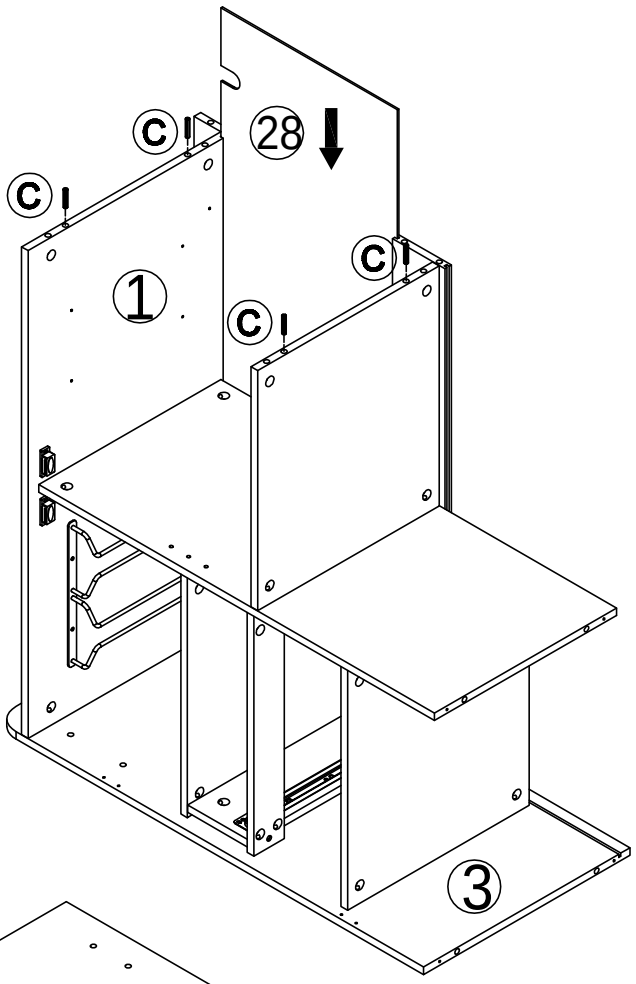

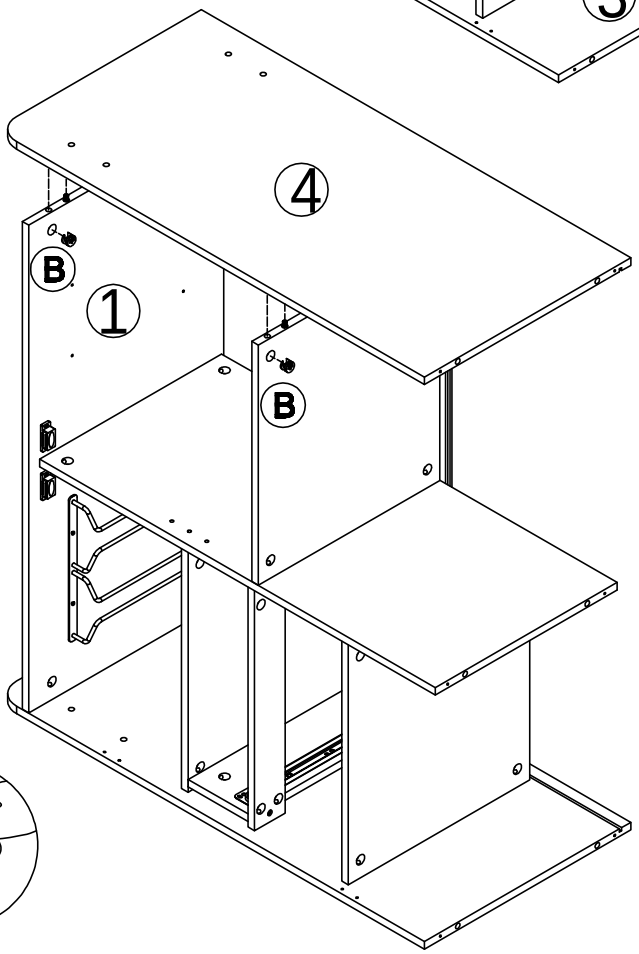

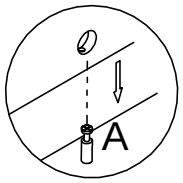

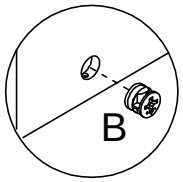

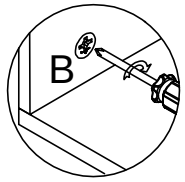

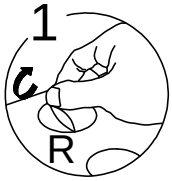

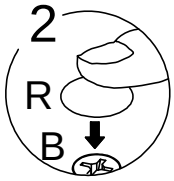

Step 7

Assembly Instructions

B	Cam Lock x6
C	8x30mmDowel x6
R	position label x6

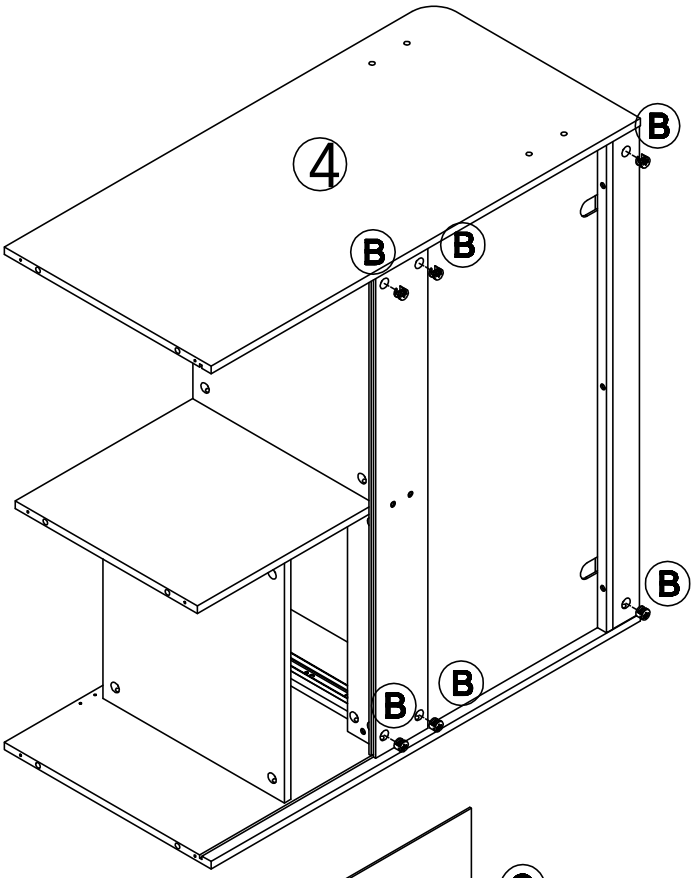

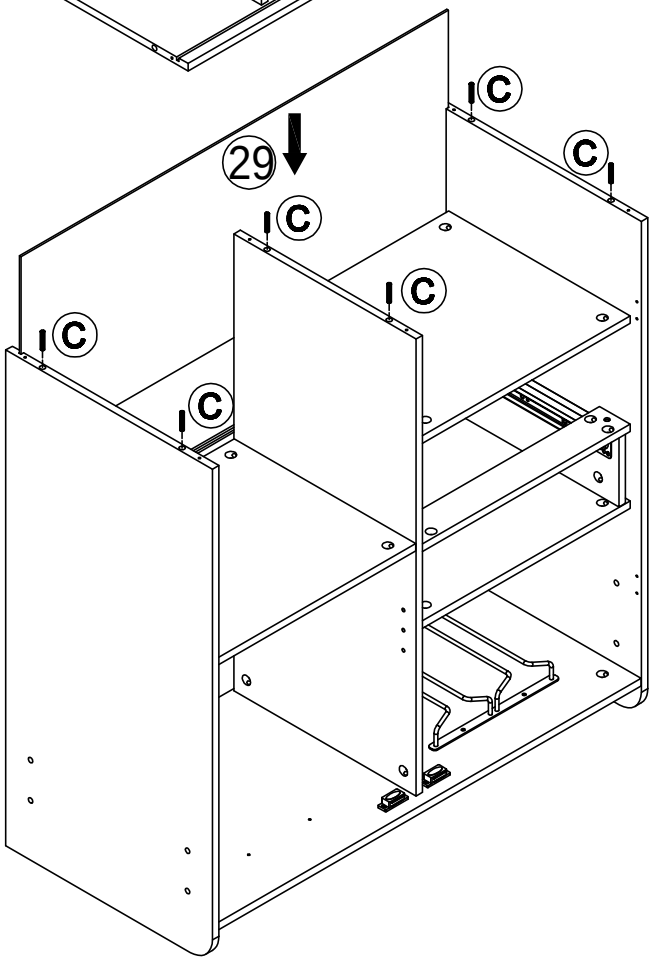

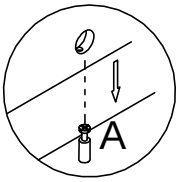

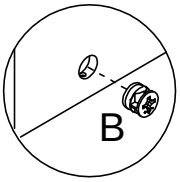

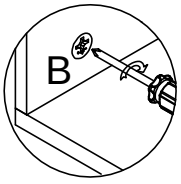

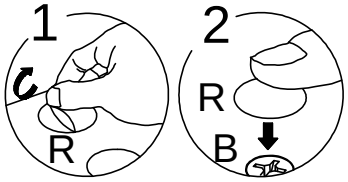

Step 8

Assembly Instructions

D	4x40mm Screw x6
E	3.5x12mm Screw x16
M	Four-hole iron sheet x4

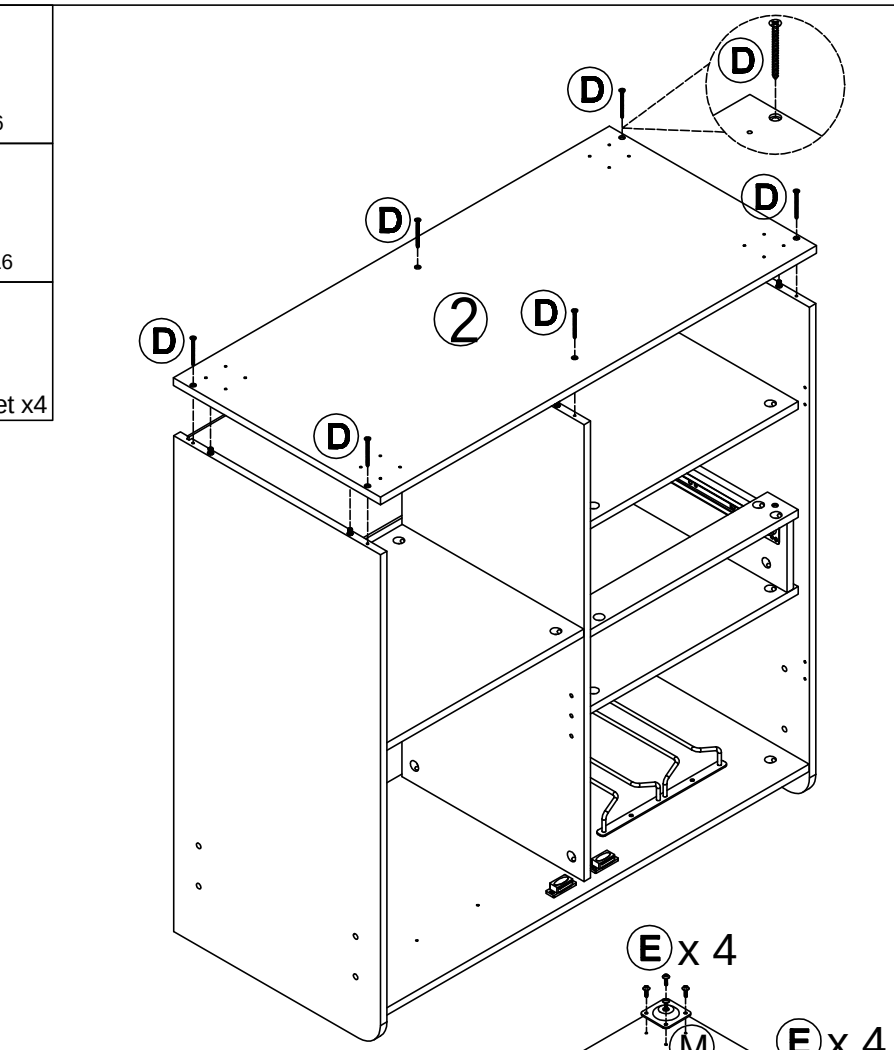

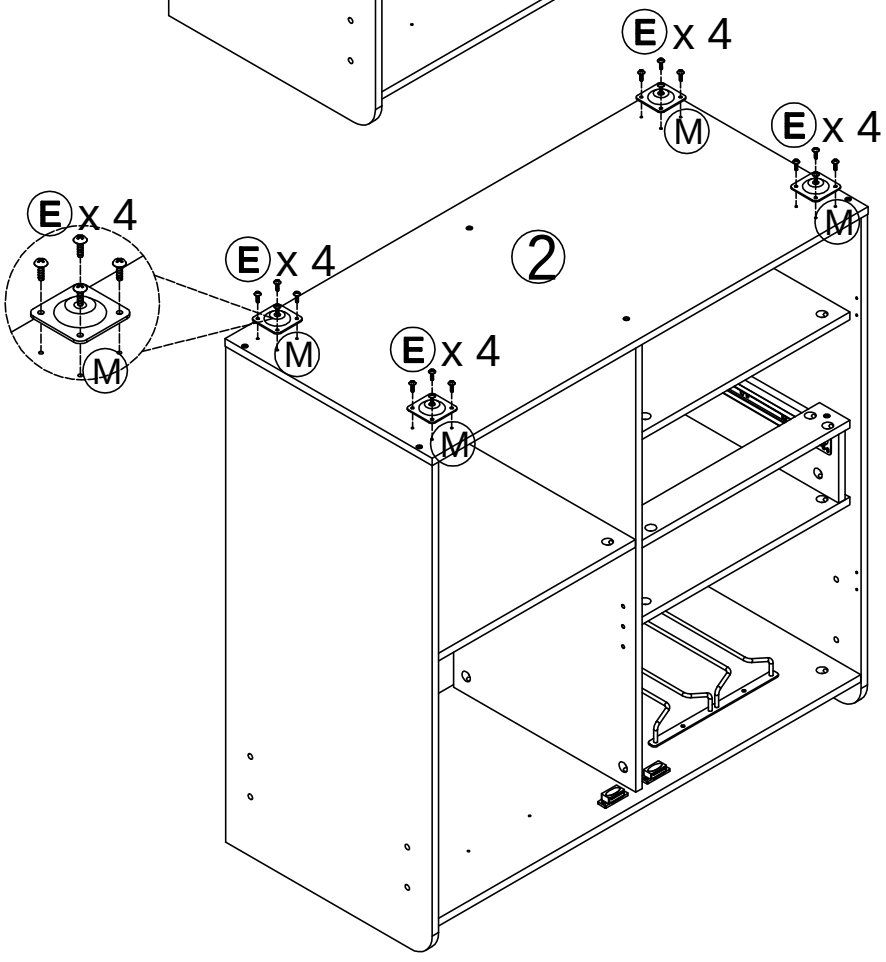

Step 9

Assembly Instructions

H



Screw 3x12mm x8

J



Backplate buckle x8

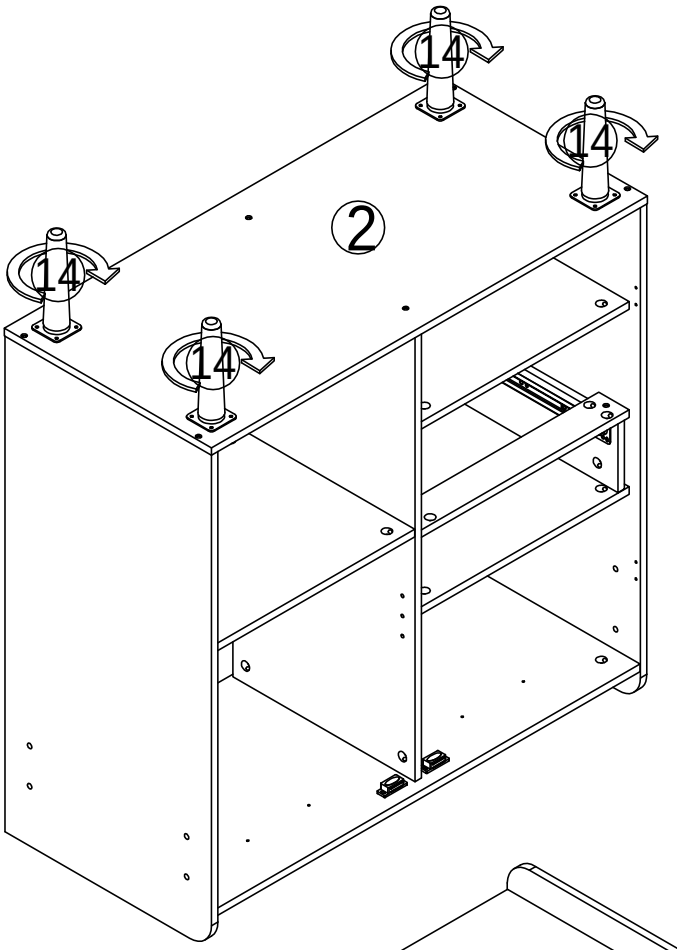

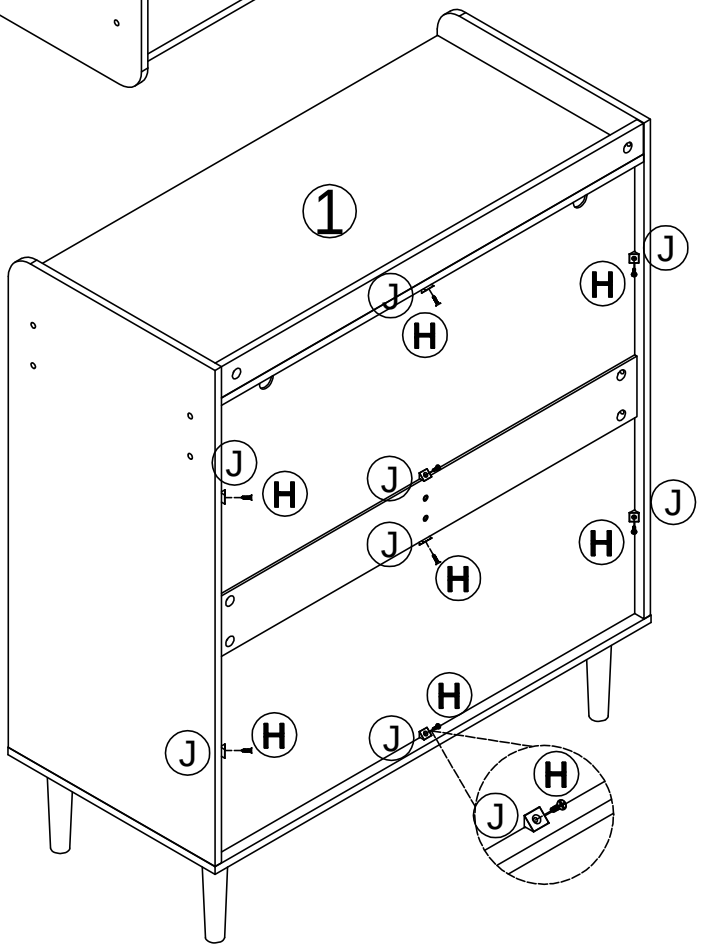

Step 10

Assembly Instructions

A	Cam Bolt x2
B	Cam Lock x2
C	8x30mmDowel x2
G	M7X40mm Screw 4
R	position label x2
S	Wrench M4X55MM x1

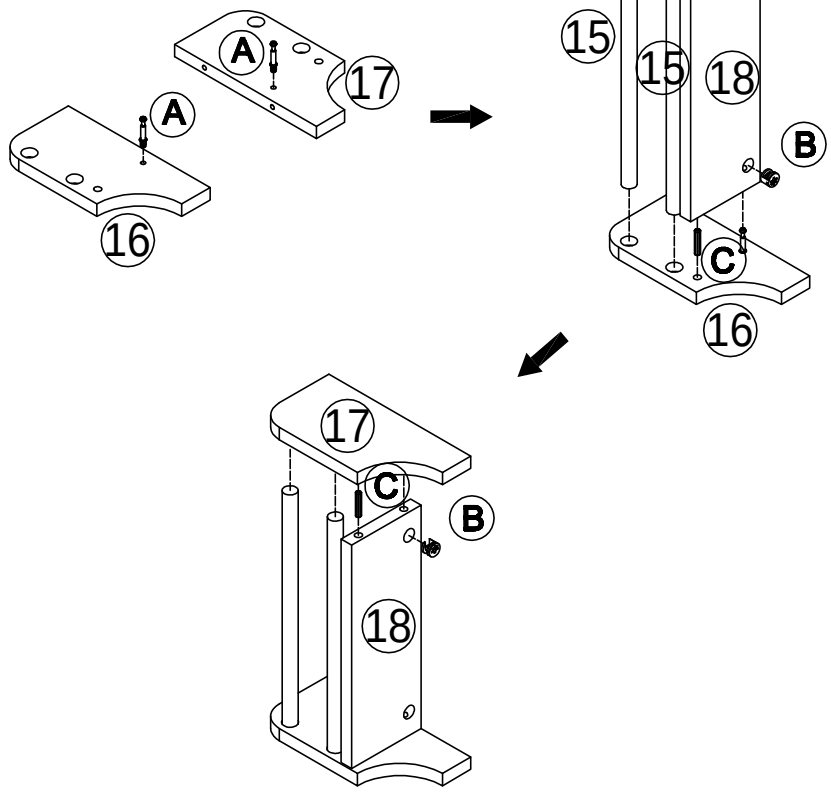

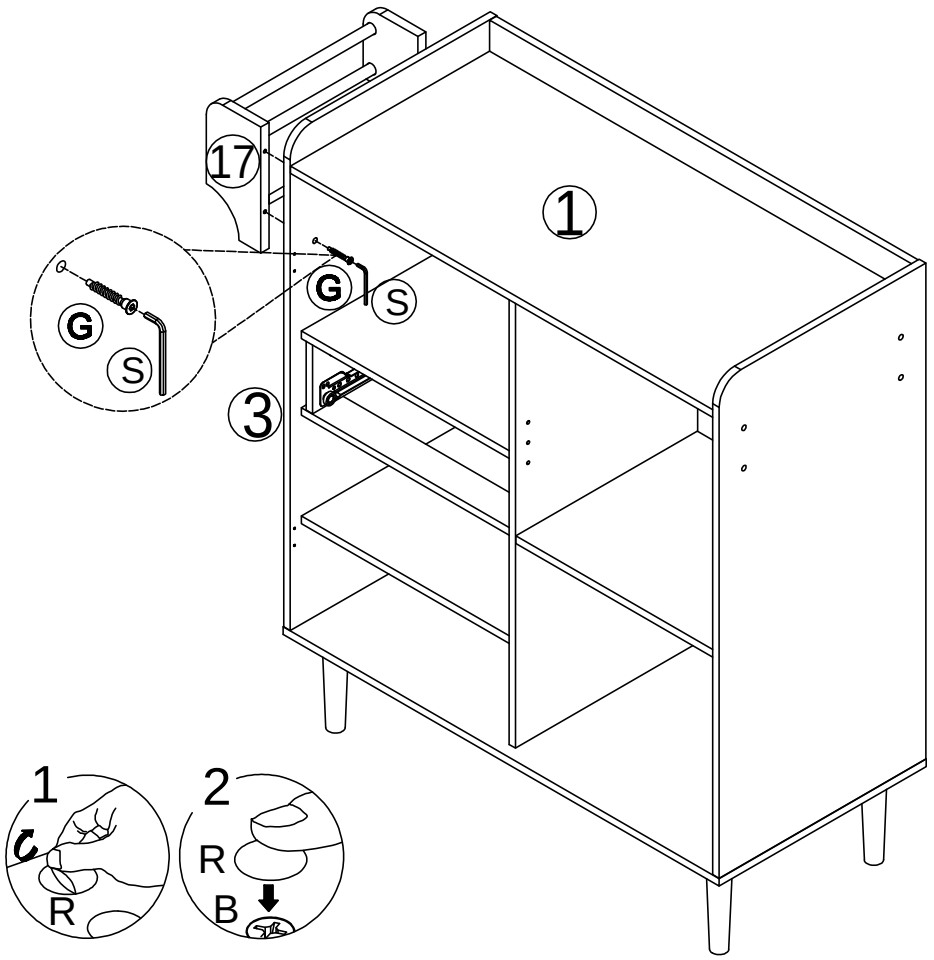

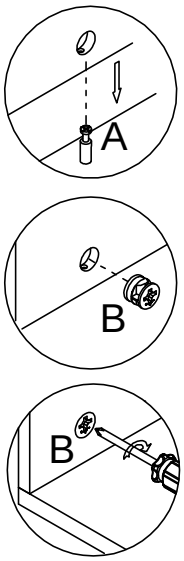

Step 11

Assembly Instructions

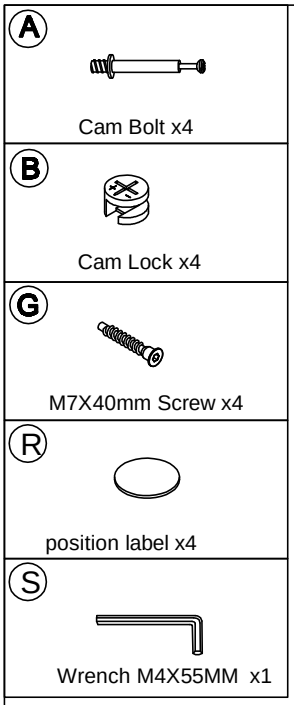

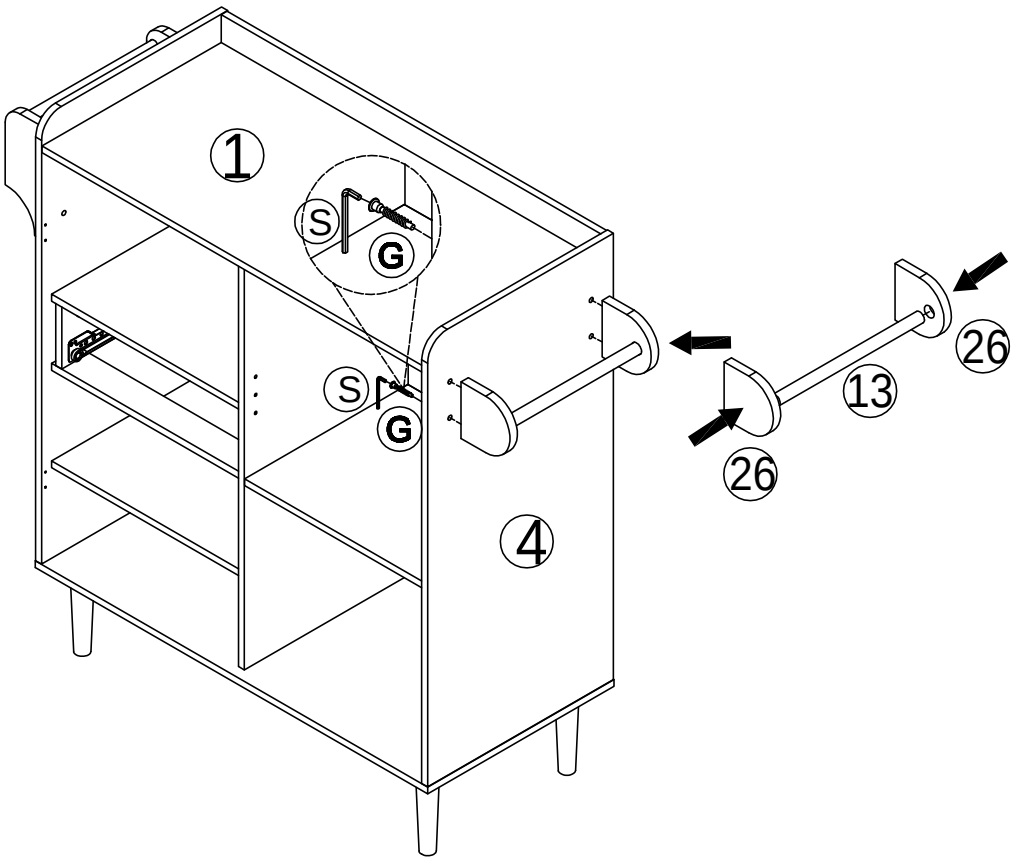

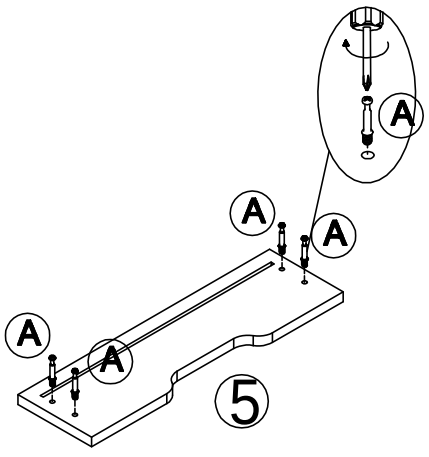

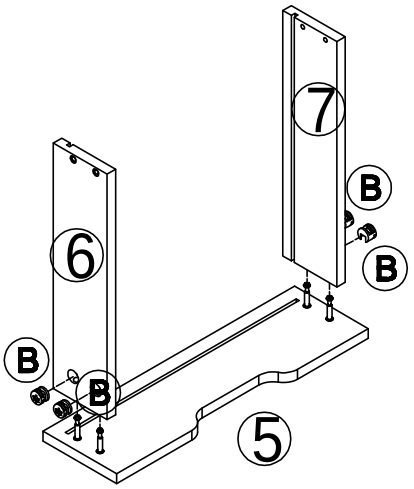

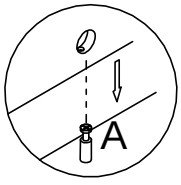

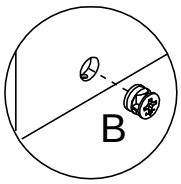

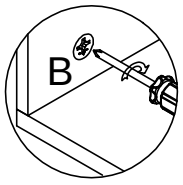

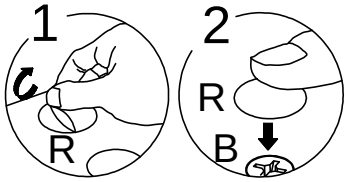

Step 12

Assembly Instructions

D 4x40mm Screw x4	DL Right sliding rail base rail x1
H Screw 3x12mm x4	DR Right sliding rail and guide rail x1

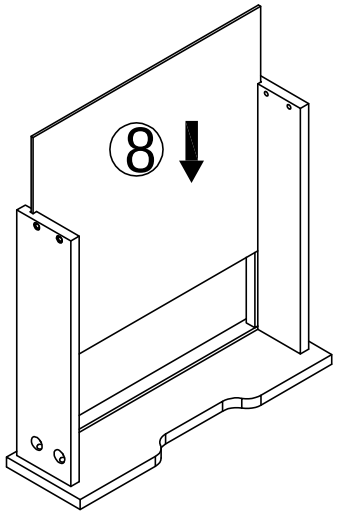

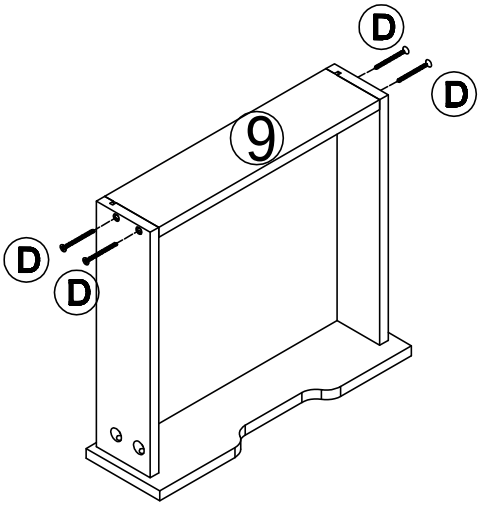

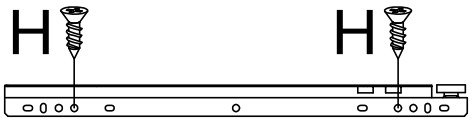

DL

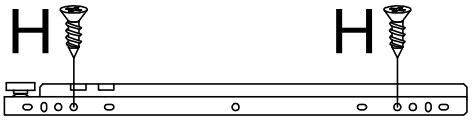

DR

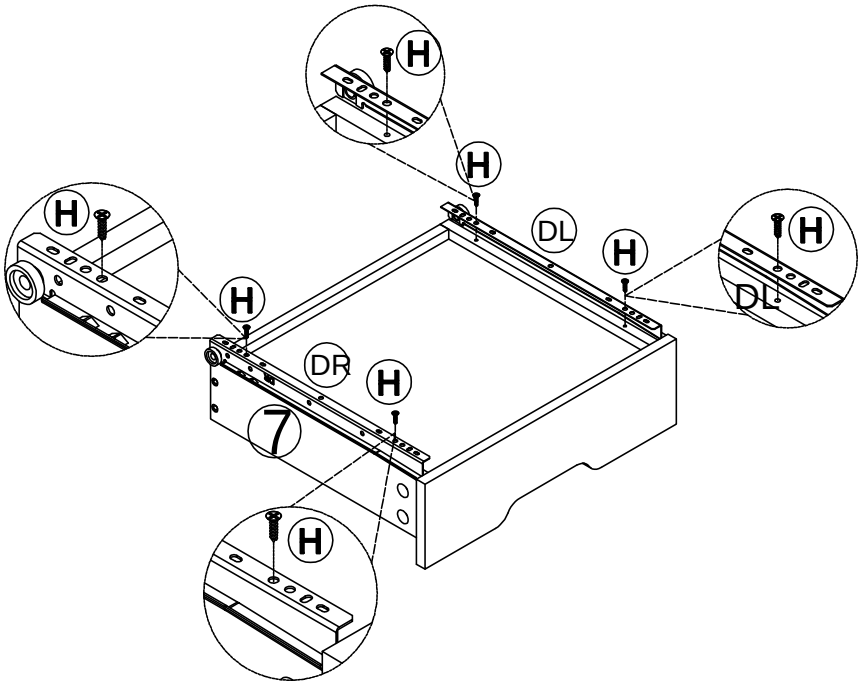

Step 13

Assembly Instructions

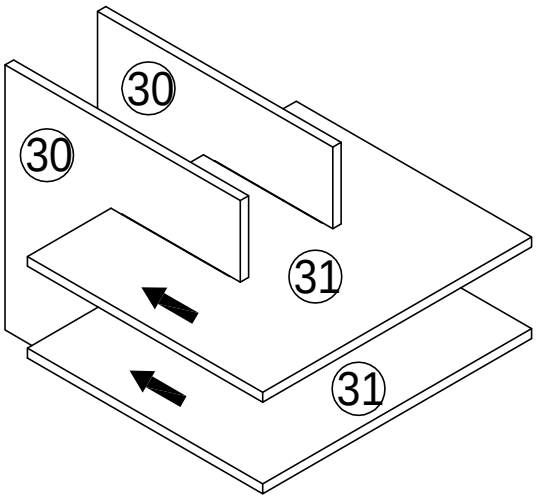

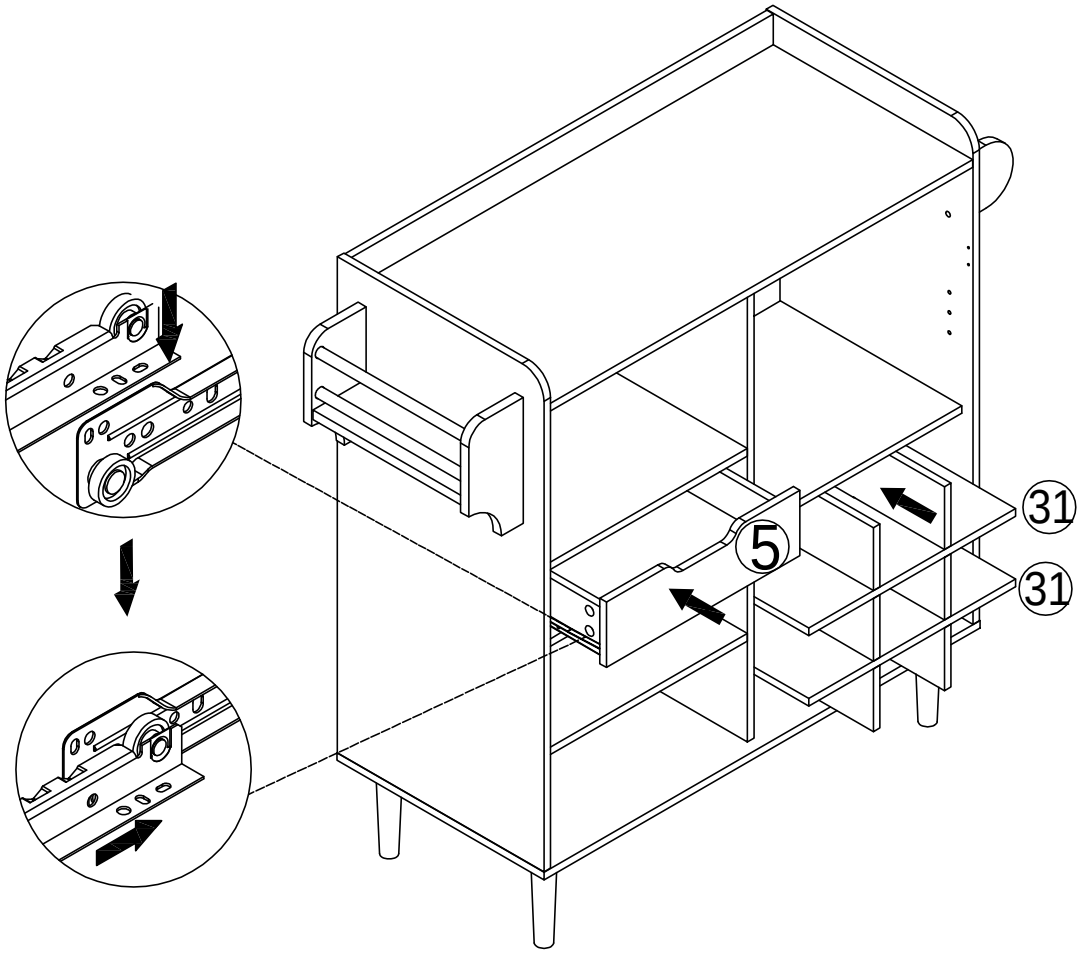

Step 14

Assembly Instructions

Ⓞ



Layered board support x4

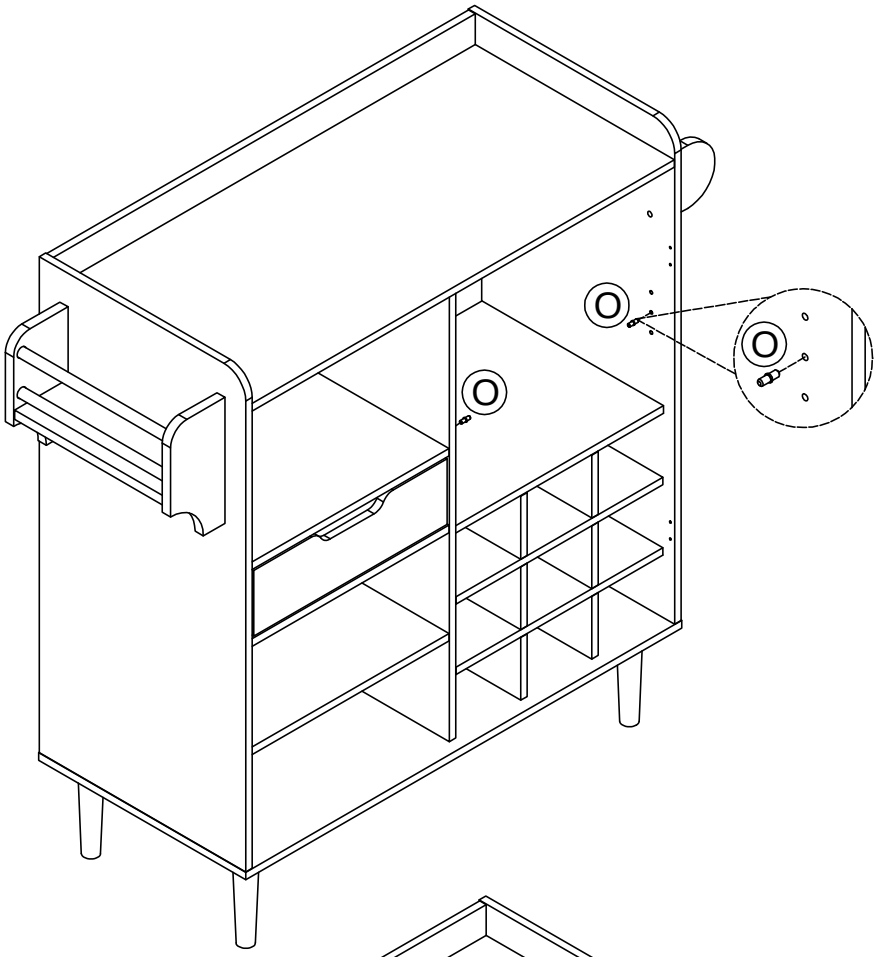

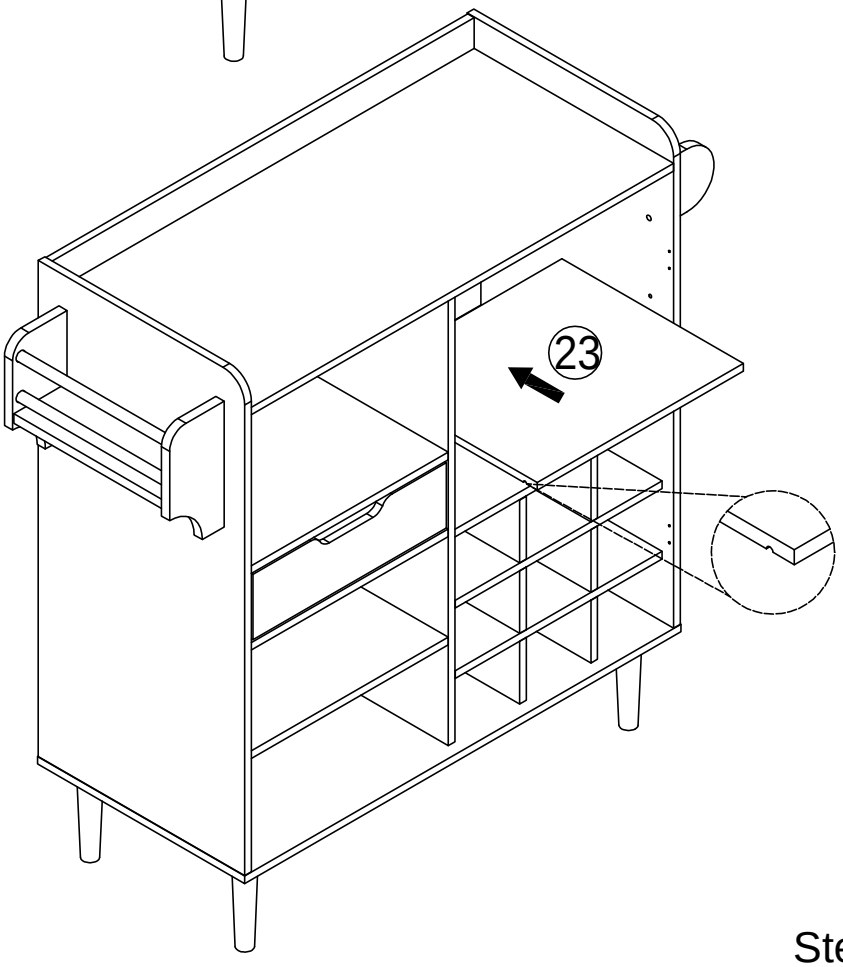

Step 15

Assembly Instructions

F	Pull handle x2
H	Screw 3x12mm x20
I	screw 4x25mm x4
N	Three-fold hinge x4
Q	Iron sheet x2

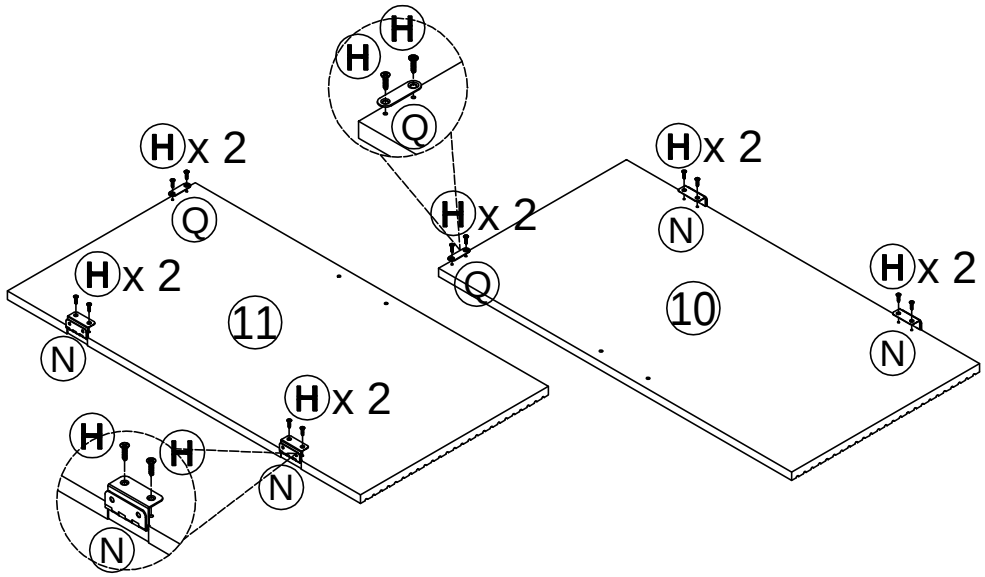

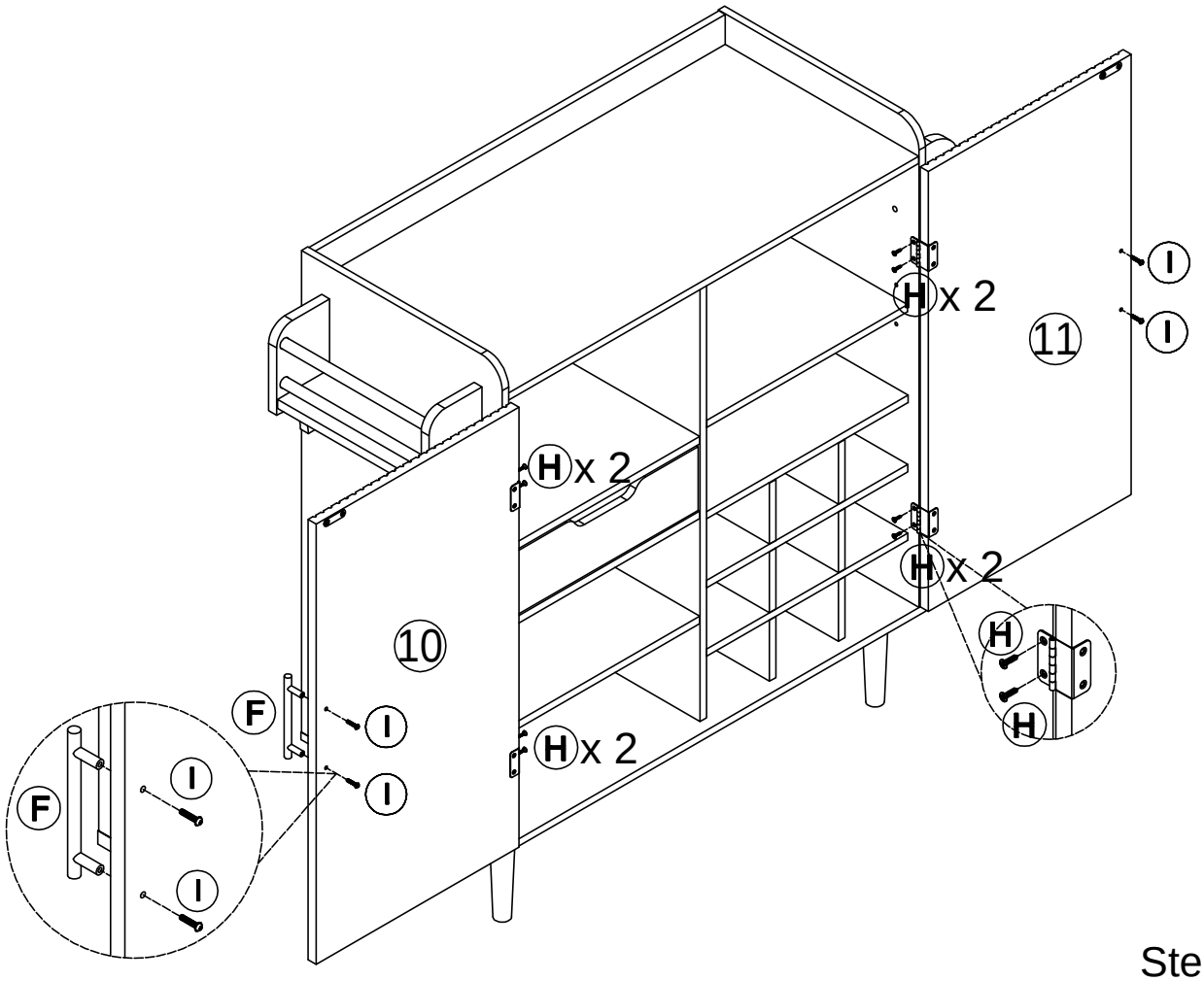

Step 16

Assembly Instructions

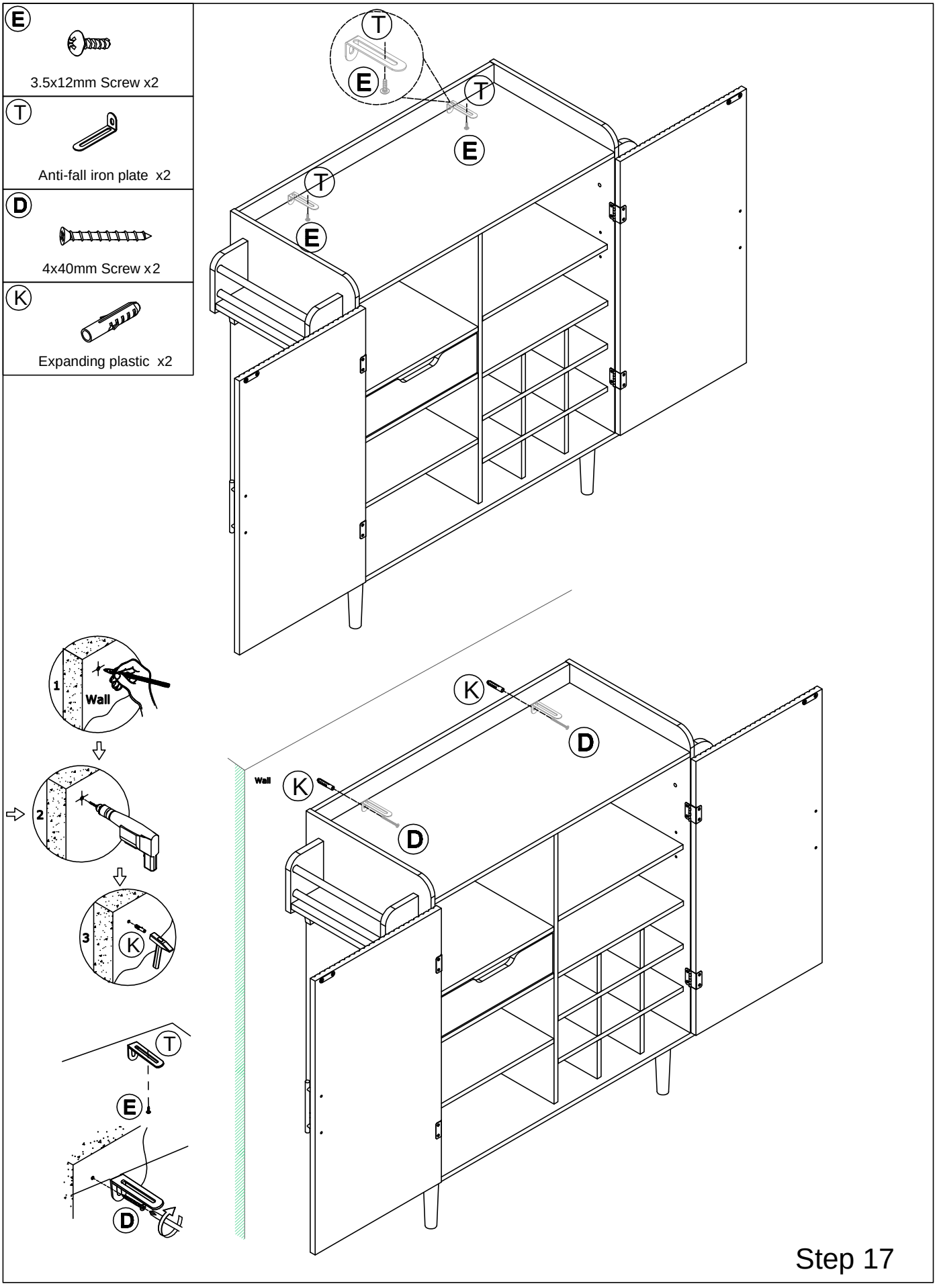

Step 17

Assembly Instructions

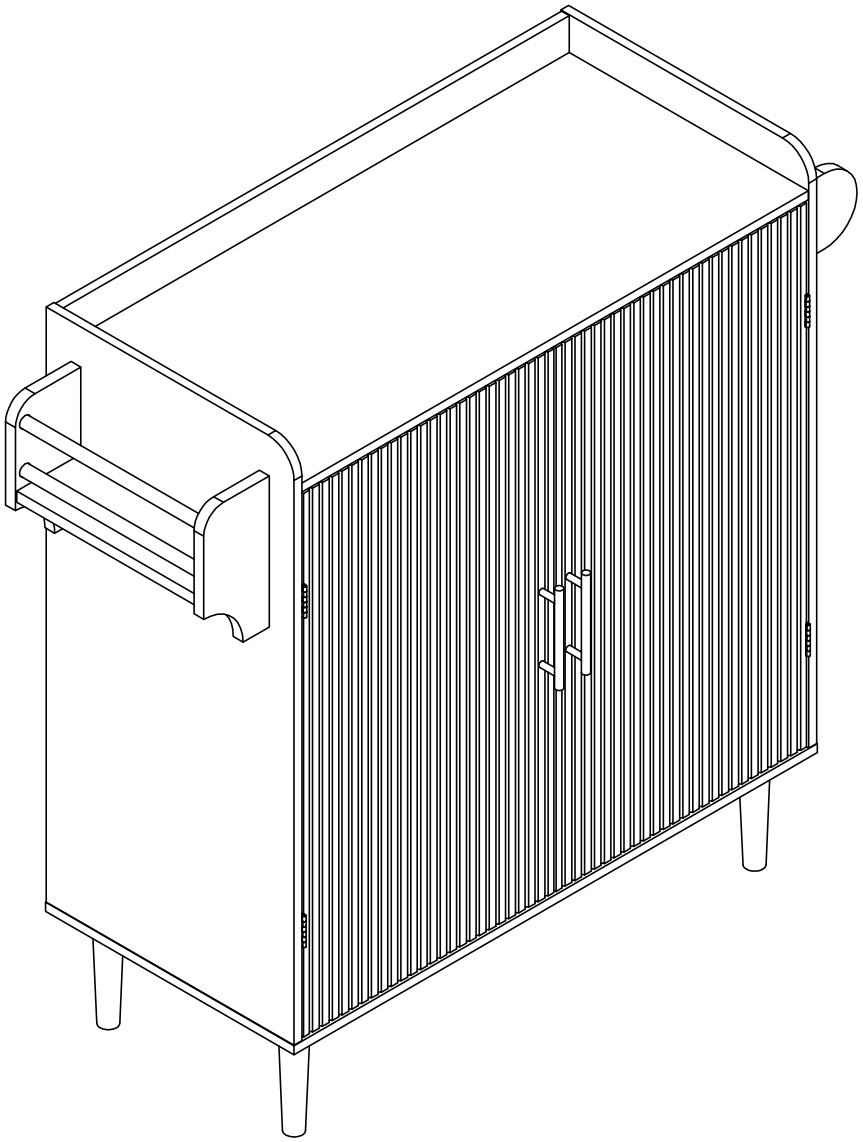

Step 18