INSTALLATION MANUAL

CEILING FAN WITH LIGHTS

Model No.: CFL-1185-01

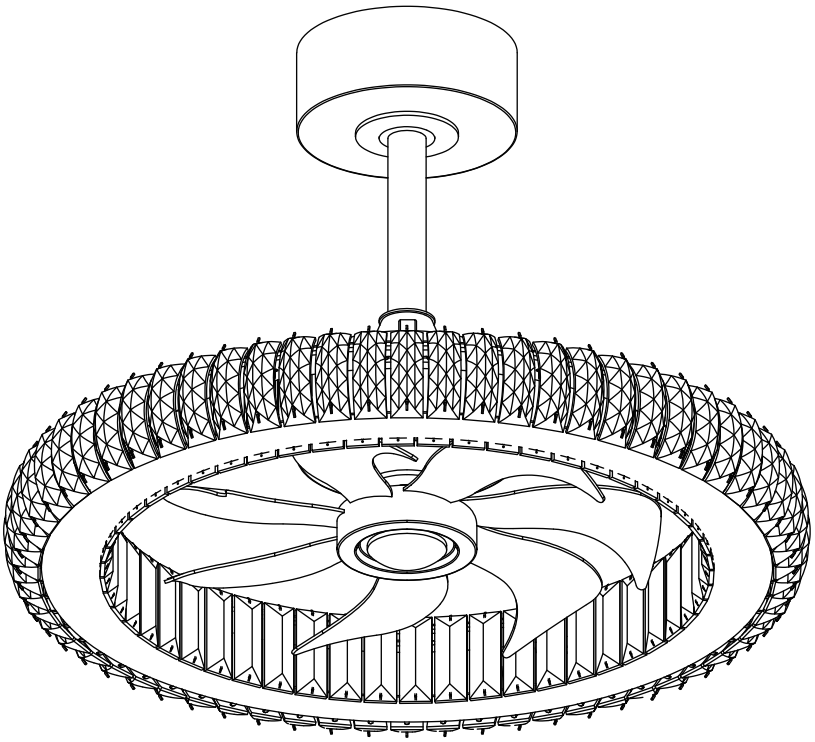

TOOLS REQUIRED

Ladder

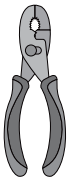

Pliers

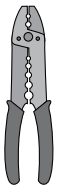

Wire Strippers

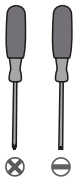

Screwdrivers

Scan for Installation Video

APP Control Applicable

PACKING LIST

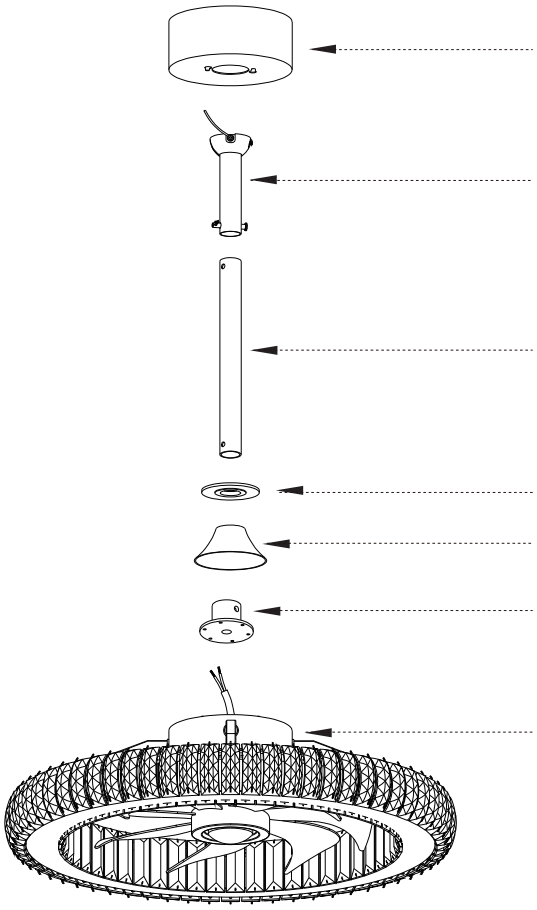

A Canopy ×1

B 5-inch Downrod Assembly ×1

C 10-inch Downrod ×1

D Canopy Ring ×1

E Coupling Cover ×1

F Yoke ×1

G Light Body ×1

INSTALLATION KIT

AA 1× Mounting Bracket	**BB** 3× Wire Nut	**CC** 2× Outlet Box Screw	**DD** 2× Flat Washer	**EE** 1× Clevis Pin
FF 1× "R" Pin	**GG** 2× Set Screw	**HH** 2× Canopy Screw	**II** 1× Remote Control	**JJ** 1× 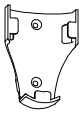 Remote Holder
KK 2× Remote Holder Anchor	**LL** 2× 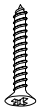 Remote Holder Screw	**MM** 6× 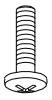 Yoke Screw	**NN** 1× Gloves	

NOTE:

1. For your convenience, you may receive extra hardware for back-up.
2. Parts "EE/FF" have been installed on the 5-inch downrod assembly (B).
3. Set screws (GG) have been installed on the yoke (F).
4. Canopy screws (HH) have been installed on the mounting bracket (AA).
5. Yoke screws (MM) have been installed on the light body (G).

INSTALLATION

1. Install the Mounting Bracket

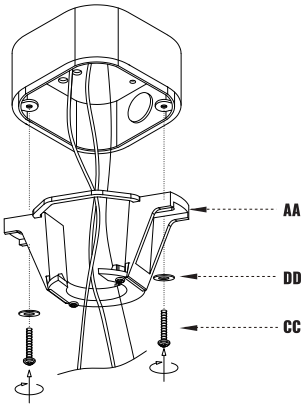

Take off the screws and washers from outlet box, attach the mounting bracket (AA) to the box with screws and washers taken off or provided in package (CC and DD).

2. Assemble the Fan

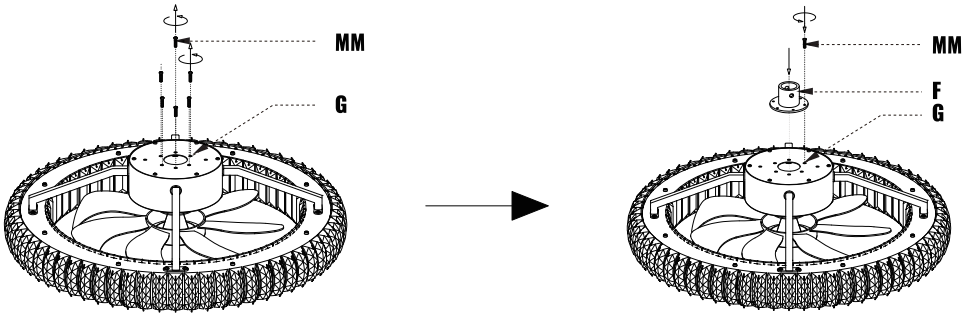

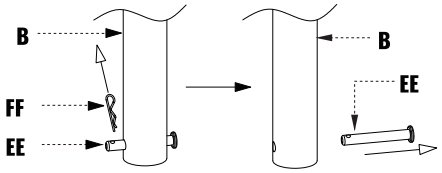

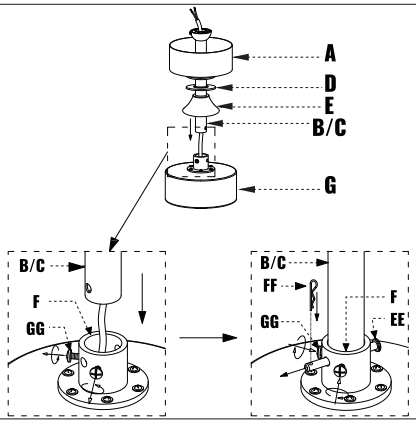

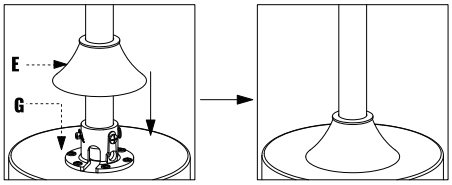

STEP 1: Remove the yoke screws (MM) from the light body (G), and then attach the yoke (F) to the light body with the screws taken off.
STEP 2: Remove the "R" pin (FF) and clevis pin (EE) from the 5-inch downrod assembly (B).
STEP 3: Assemble the canopy (A), canopy ring (D) and coupling cover (E). Route wires from the fan through the downrod (B/C).
STEP 4: Align the holes at the bottom of the downrod (B/C) with those in the light body (G). Carefully insert the clevis pin (EE) through the holes in the light body (G) and downrod (Be careful not to jam the clevis pin against the wires inside the downrod). Insert the "R" pin (FF) into the end of the clevis pin (EE). Tighten the set screws (GG) to secure the downrod.
STEP 5: Fit the coupling cover (E) onto the light body (G).

3. Hang the Fan

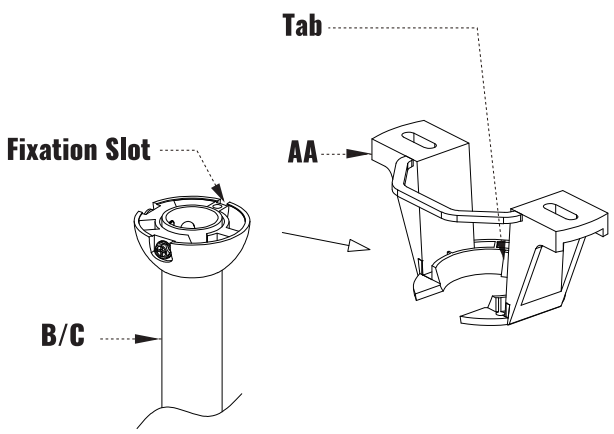

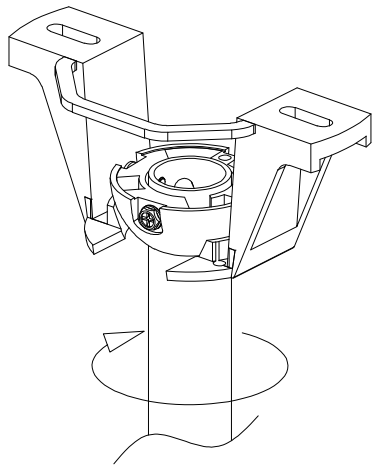

Lift the downrod (B/C) into the mounting bracket (AA). Rotate the downrod until the tab in the mounting bracket is seated in the fixation slot in the downrod ball.

4. Connect the Wires

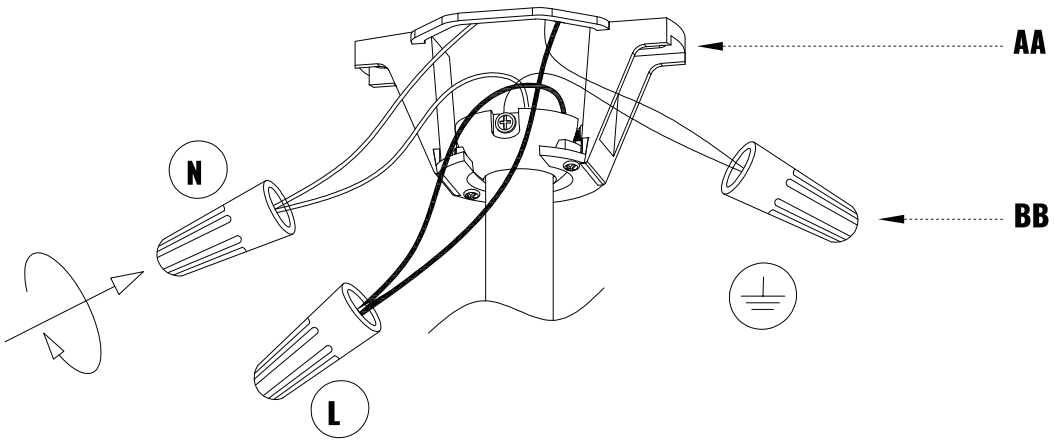

STEP 1: Connect the wires from the fan to the house supply wires with wire nuts (BB), ground wire (green, green/yellow, or bare copper) to ground wire, neutral wire (white) to neutral wire, and hot wire (black) to hot wire. Wrap the connection with electrical tape.
STEP 2: Spread apart the wires so that the hot wires are on one side of the outlet box and the neutral wires are on the other side.

Note:
① This fan only needs one set of input wires (black, white, and ground wire). Both of the fan and lights will be controlled by the remote controller.
② This fan can only be connected to an on/off switch if you have one, not a dimmer switch.

5. Attach the Canopy

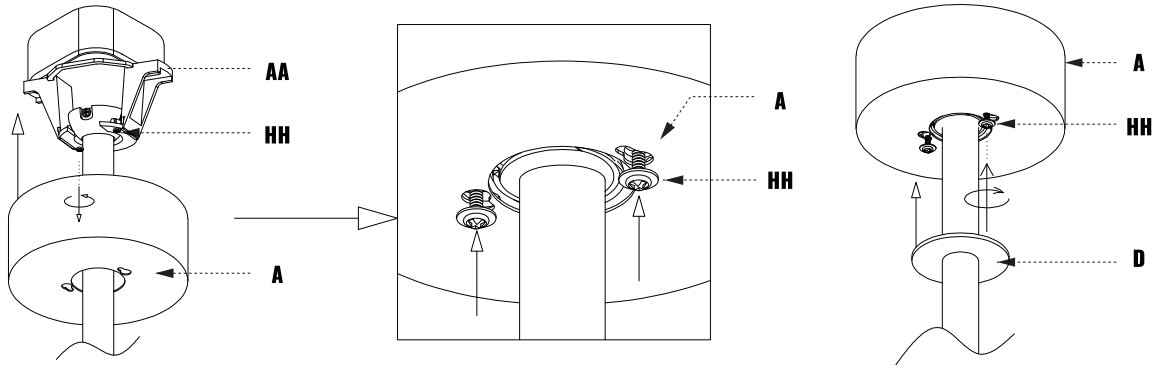

STEP 1: Loosen the canopy screws (HH) from the mounting bracket (AA) but do not take off.
STEP 2: Push canopy (A) up to the ceiling, making canopy screws (HH) go through the screw holes on canopy (A), then rotate canopy (A) to make it lock onto the canopy screws (HH),and tighten the canopy screws (HH) to secure the canopy (A).
STEP 3: Slide the canopy ring (D) up to the canopy (A).

6. Attach the Remote Holder

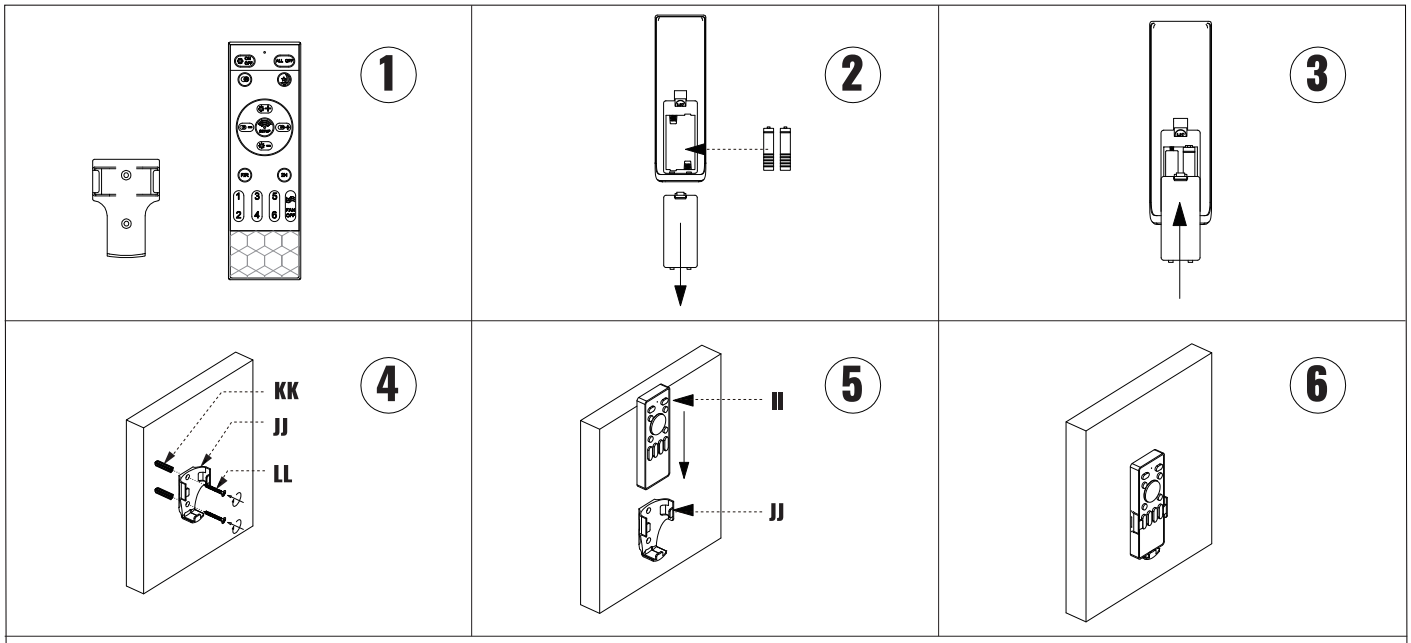

Insert 2 batteries before using: AAA 1.5V battery x 2pcs (not included).

STEP 1: Mark and drill screw holes in the wall, then insert the remote holder anchors (KK).
STEP 2: Use remote holder screws (LL) to fix the remote holder (JJ) onto the wall.

REMOTE CONTROL INSTRUCTIONS

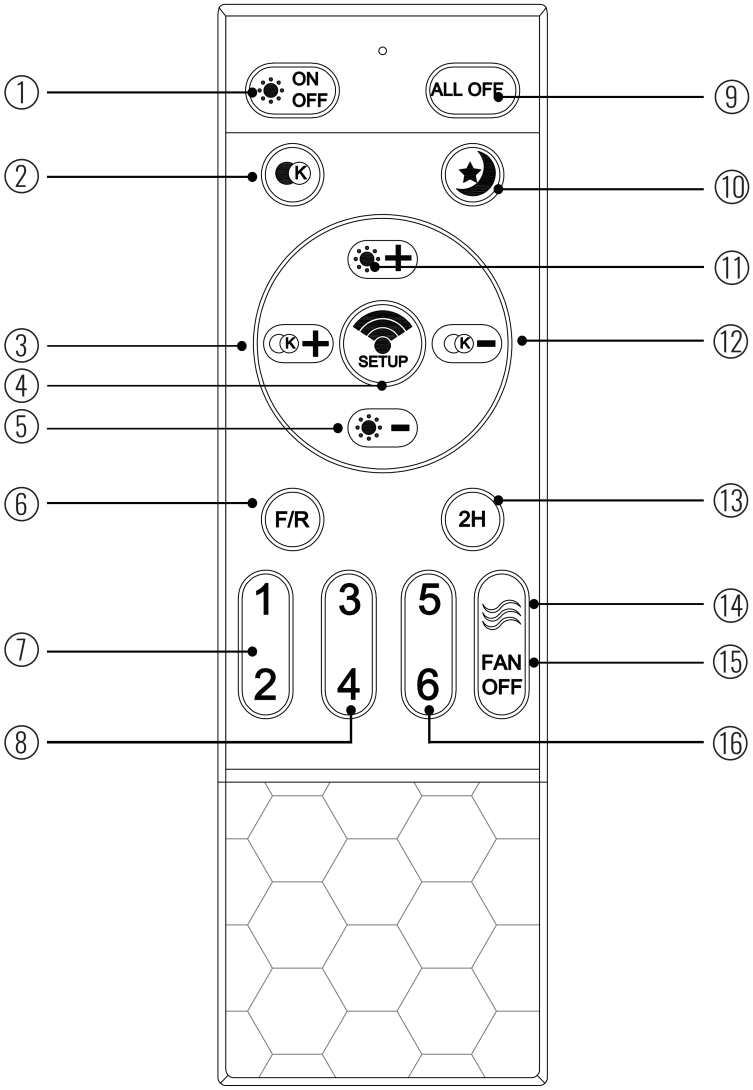

① : Turn on / off the light.

② : Quick switch of the light color: Yellow Light→White Light→Natural Light

③⑫ : Adjust the light color temperature.

④ : **SETUP:** If the remote control loses signal of the fan, turn off the power from wall switch, then turn it on, press this button immediately for around 3 seconds, after the fixture beeps or flashes, then it's done.

⑤⑪ : Adjust the brightness of the light.

⑥ : Alternate the fan's rotation between forward and reverse.

⑦⑧⑯ : 1/2/3/4/5/6 for fan speeds.

⑨ : Turn off the fan and light

⑩ : Night mode, dim the light.

⑬ : 2H for timing the fan.

⑭ : Natural wind, fan speed will change automatically.

⑮ : Turn off the fan.

APP CONTROL INSTRUCTIONS

NOTE: Scan the QR code and install the APP in your phone, or search and install "FanLamp Pro" from Google Play, Apple App and other APP stores.

Make sure your phone is connected to the internet and bluetooth enabled.

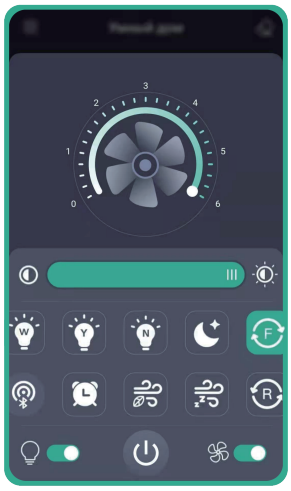

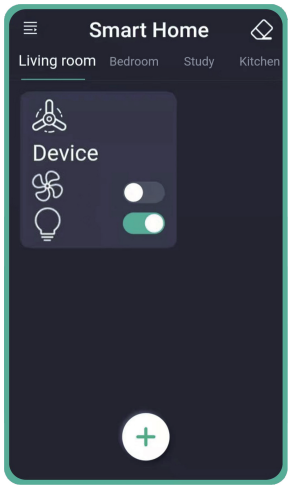

Pairing: Click the pair button within 5 seconds after turning on the fan from the wall switch. Once the fan flashes or beeps, it has been successfully paired with your phone and can now be controlled through the app.

Slide the slider to change the fan speed.

Slide the slider to change the brightness of the light.

Quick switch for "White" light color.

Quick switch for "Yellow" light color.

Quick switch for "Natural" light color.

Night mode: Dim the lights.

Fan moves forward.

Change the direction of the wind (Not applicable on this fan).

Timing the fan.

Natural wind: The fan speed will change automati-cally when you use this function.

Sleeping wind (Not applicable on this fan).

Fan moves reversely.

Turn on/off the light.

Turn on/off the fan.

Unpairing: Click the unpair button within 5 seconds after turning on the fan. Once the fan flashes or beeps, it has been successfully unpaired from your phone.

Scan for Installation Video

APP Control Applicable

THANK YOU FOR CHOOSING AND USING OUR PRODUCT.