KS4121,2,5,8PL
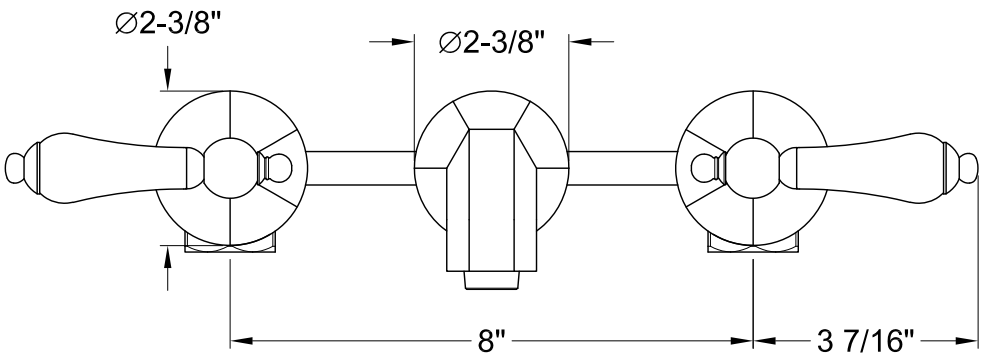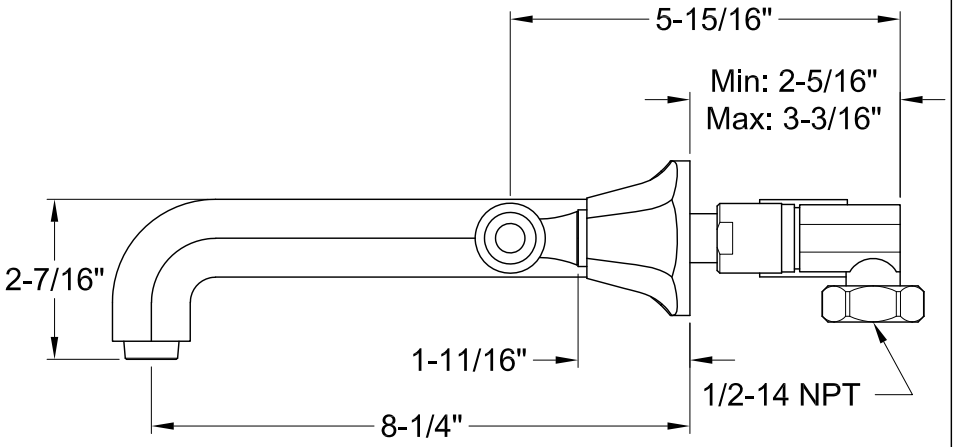
Twin Handles Wall Mount Bathroom Faucet