BT017 Sink&Racket Installation Guide

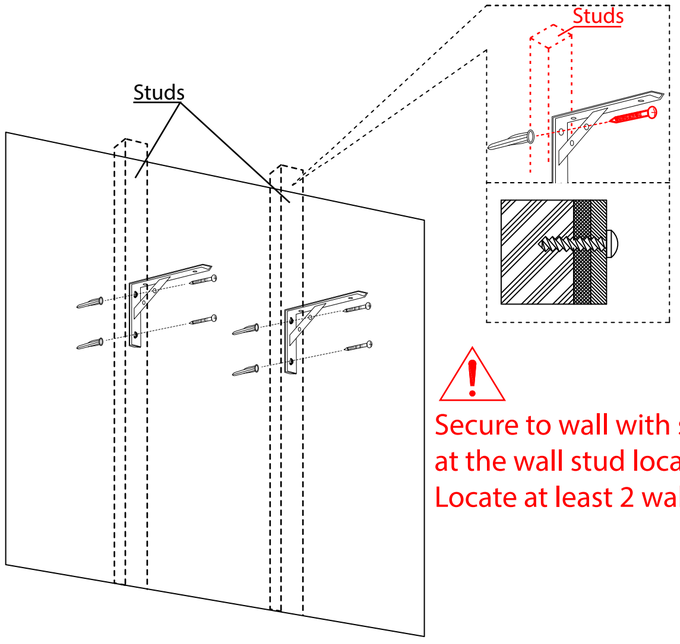

Secure to wall with screws at the wall stud location. Locate at least 2 wall studs.

1

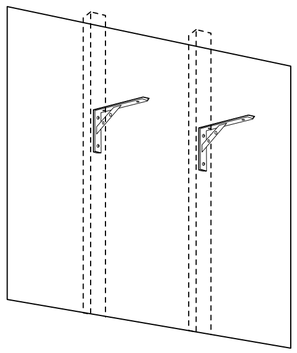

Make sure to apply the silicone sealant to the back of the sink. Pre-drill two screw holes to make sure the sink is installed safer and more stable on the wall.

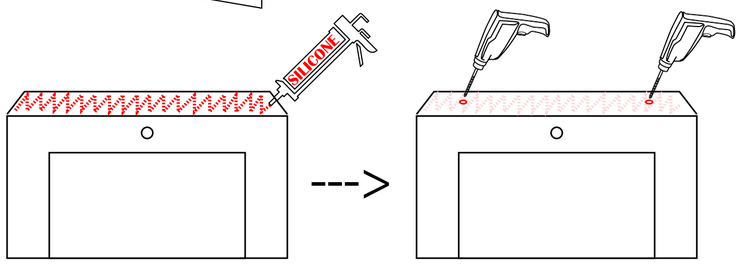

2

Apply the silicone sealant around your new sink and remove excess sealant. Fastern the sink to the wall with dryscrews which can make your stink safer and more stable.

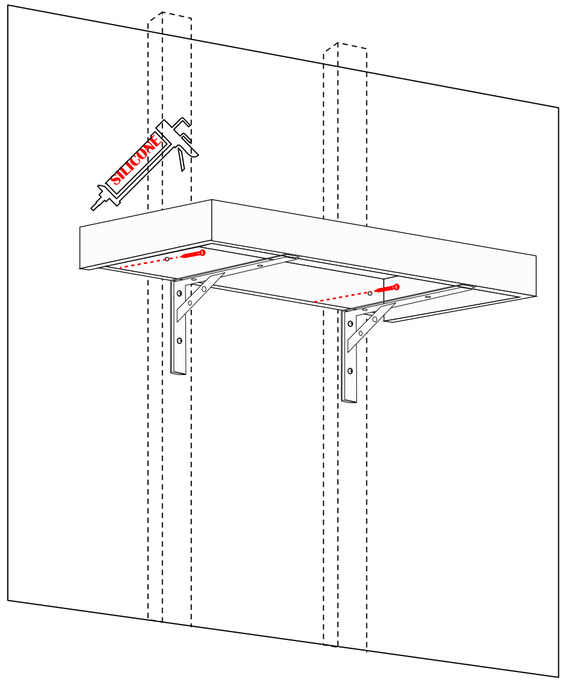

3