INSTALLATION GUIDE

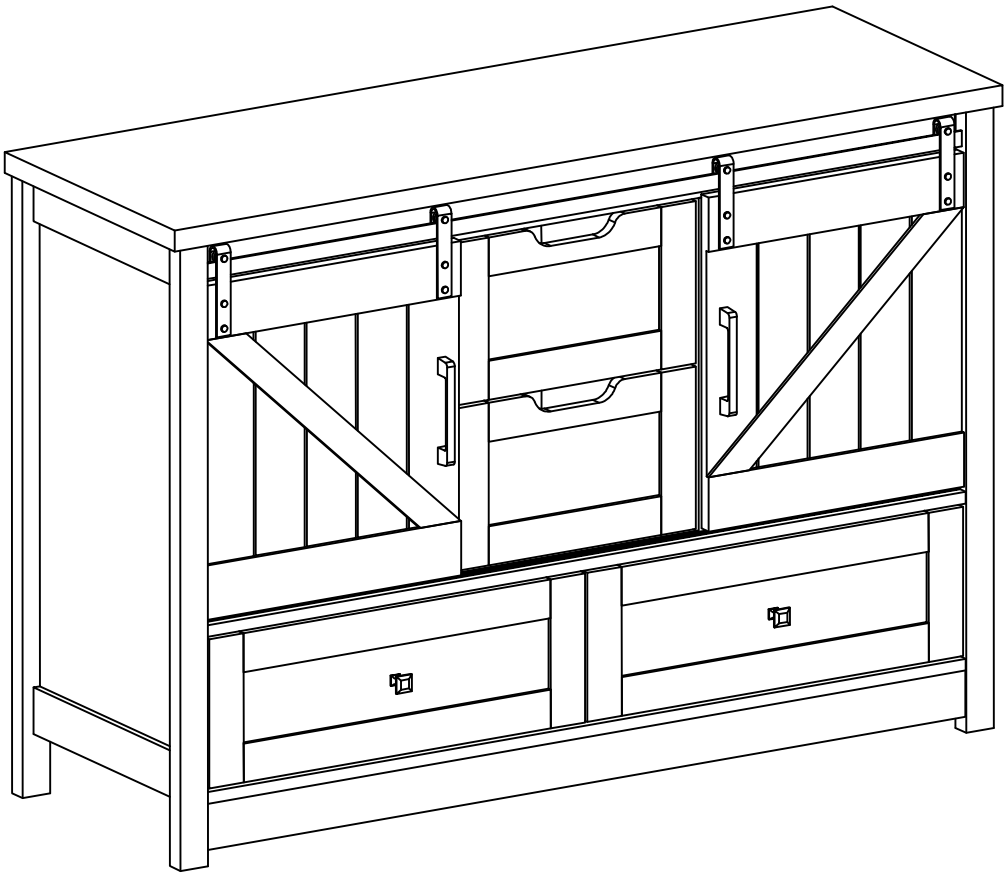

PACKAGE INCLUDE

KEEP THE NUMBER STICKERS ON UNTIL FINISHED ASSEMBLING!

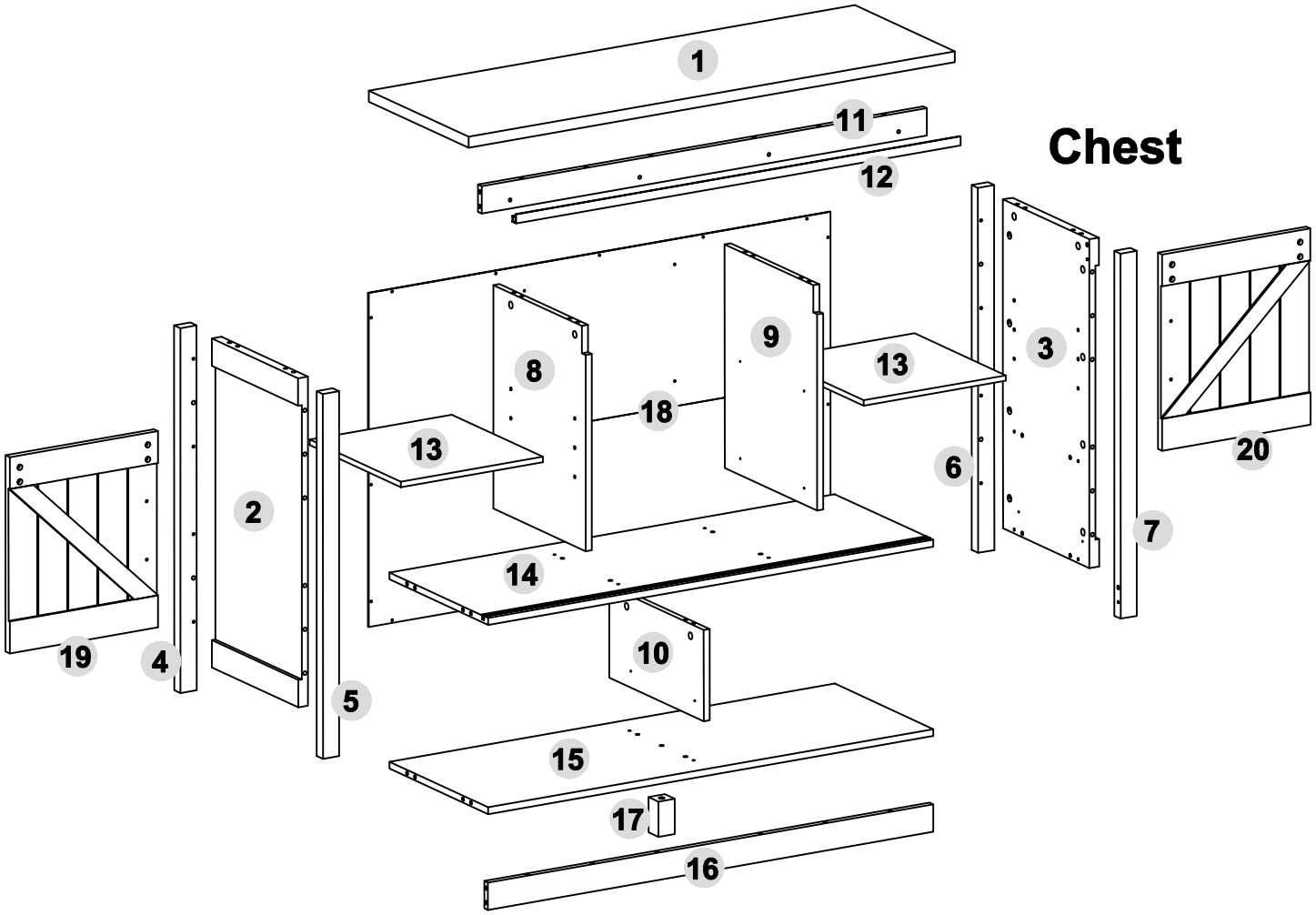

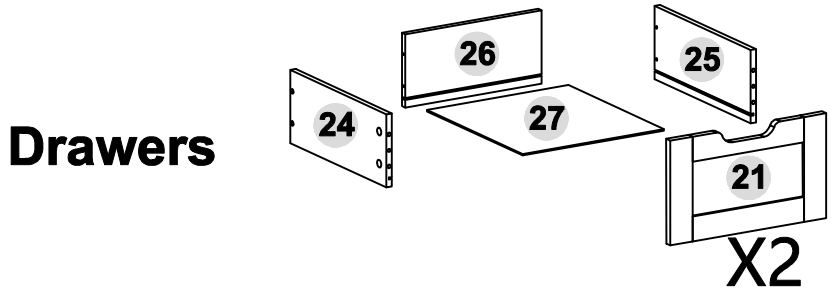

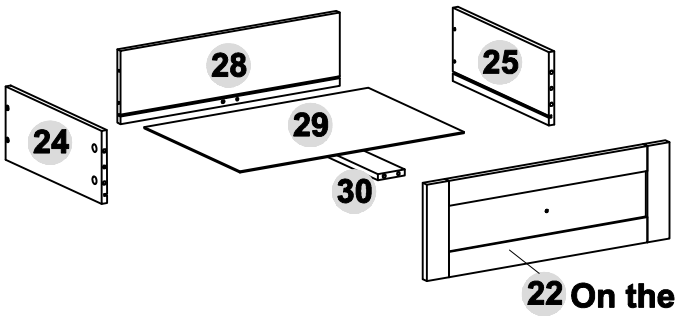

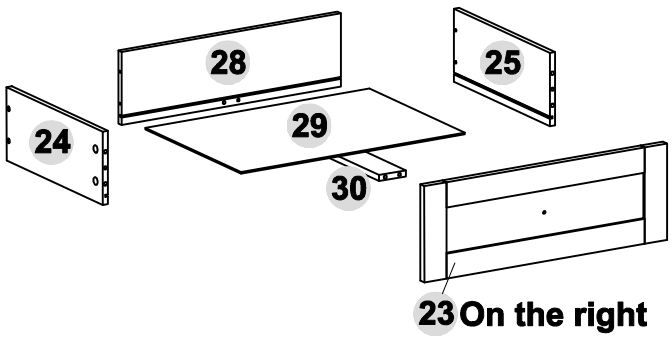

PART IDENTICATION

CODE	DESRIPTION	QTY
1	Top panel	1
2	Left side panel	1
3	Right side panel	1
4	Left hind leg	1
5	Left front leg	1
6	Right hind leg	1
7	Right front leg	1
8	Upper left middle partition panel	1
9	Upper right middle partition panel	1
10	Lower middle partition panel	1
11	Upper front baffle	1
12	Upper slide rail	1
13	Adjustable shelf	2
14	Middle shelf	1
15	Bottom panel	1
16	Bottom trim strip	1
17	Base support	1
18	Back panel	1
19	Left sliding door	1
20	Right sliding door	1
21	Front panel of upper drawer	2
22	Left front panel of lower drawer	1
23	Right front panel of lower drawer	1
24	Drawer left side panel	4
25	Drawer right side panel	4
26	Upper drawer tail plate	2
27	Bottom panel of upper drawer	2
28	Lower drawer tail plate	2
29	Bottom panel of lower drawer	2
30	Bottom drawbar of lower drawer	2

PACKAGE CONTENTS

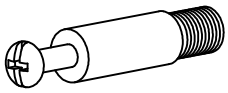	Ø15x9MM 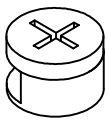	Ø8x30MM 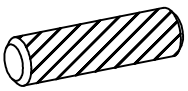	Ø6x30MM 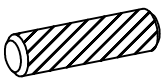
A 66x+1	B 66x+1	C 40x+1	D 12x+1
Ø3.5x35MM 	Ø3.5x12MM 	Ø3x14MM 	14" 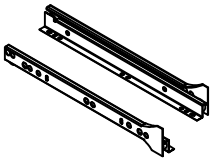
E 16x	F 48x+1	G 22x+1	H 4x
128MM 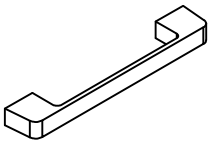		M4x16MM 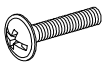	M4x8MM 	Ø4x50MM 
I 2x	J 2x	K 4x	L 2x	M 6x
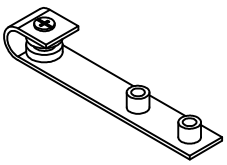	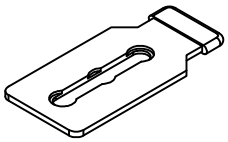	M6x14MM 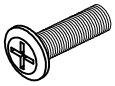	M6x25MM 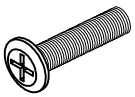	Ø3.5x12MM 
N 4x	O 4x	P 8x	Q 4x	R 8x+1
	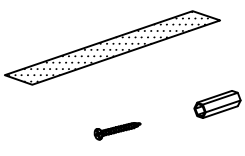	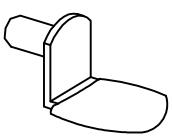	M6x30MM 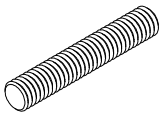	Ø16(M6x16MM) 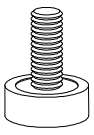
S 8x+1	T 2x	U 8x	V 1x	W 1x

How to use the cam lock system

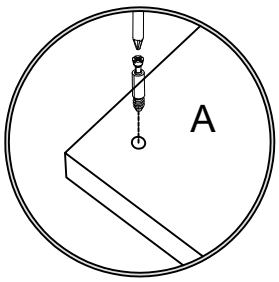

1.Screw cam boit into panel

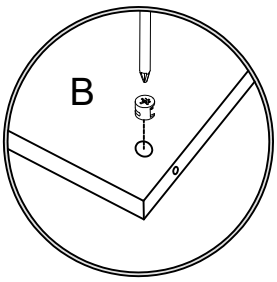

2.Push cam into panel - arrow feature on cam top points to panel edge

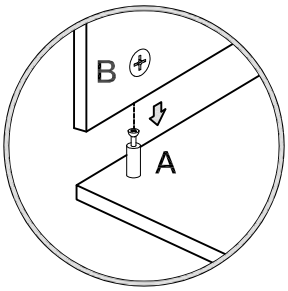

3.Aligu cam bolt(s) with cam(s) and insert all the way into cross-bored hole(s)

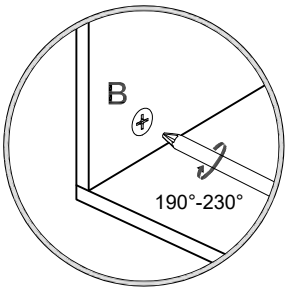

4.Rotate cam(s) clockwise 190°-230° to lock panels together

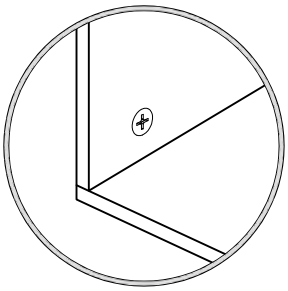

5.Panels should be tight against each other and connection should be rigid

Insert the wood dowel [C] at least half way by tapping lightly with a rubber mallet, IF NECESSARY.

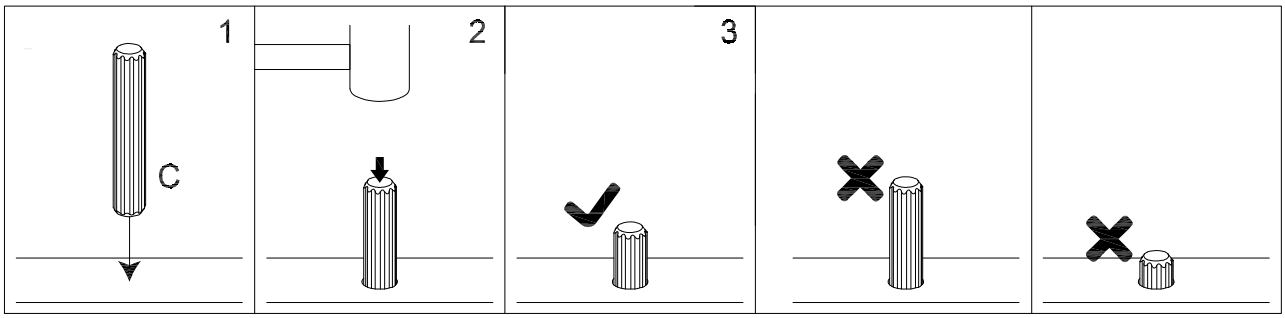

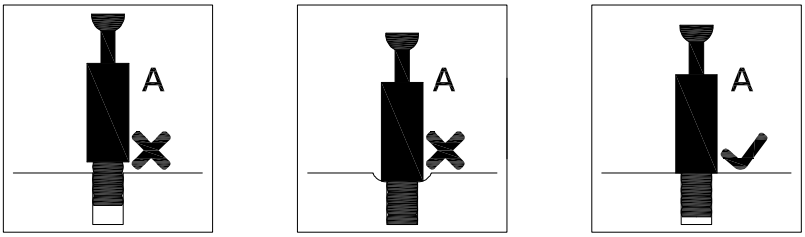

⚠ WARNING

- Unit must be placed on a level surface or leveled with included hardware (when applicable).
- Do not sit or stand on or allow children to climb, sit or stand on the assembled product.
- For safety reasons, it is imperative that this unit be mounted to the wall.
- Do not use without installing the tip restraint.
- Unit can tip over causing severe injury or death.
- Do not exceed the recommended weight limits.
- Evenly distribute the weight on each level and always keep the heavier loads on the bottom.
- Before cutting, drilling or hammering into any wall or floor surface, verify the location of electrical, plumbing and gas lines. Cutting may cause serious injury.

Ready to assemble the dresser

Before installation, observe each structure of the drawer dresser. The drawer dresser consists of two main parts. You will assemble the chest first, and then install two sliding door and the two small drawers and two larger drawers. We should keep all track slides on the dresser body in one direction like the below finished look.

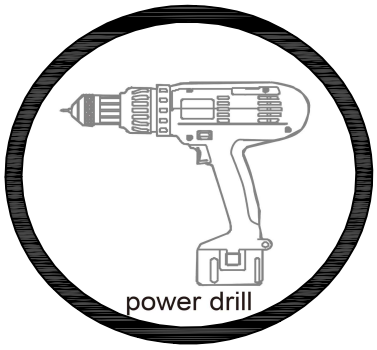

We recommend using a power drill to assemble.

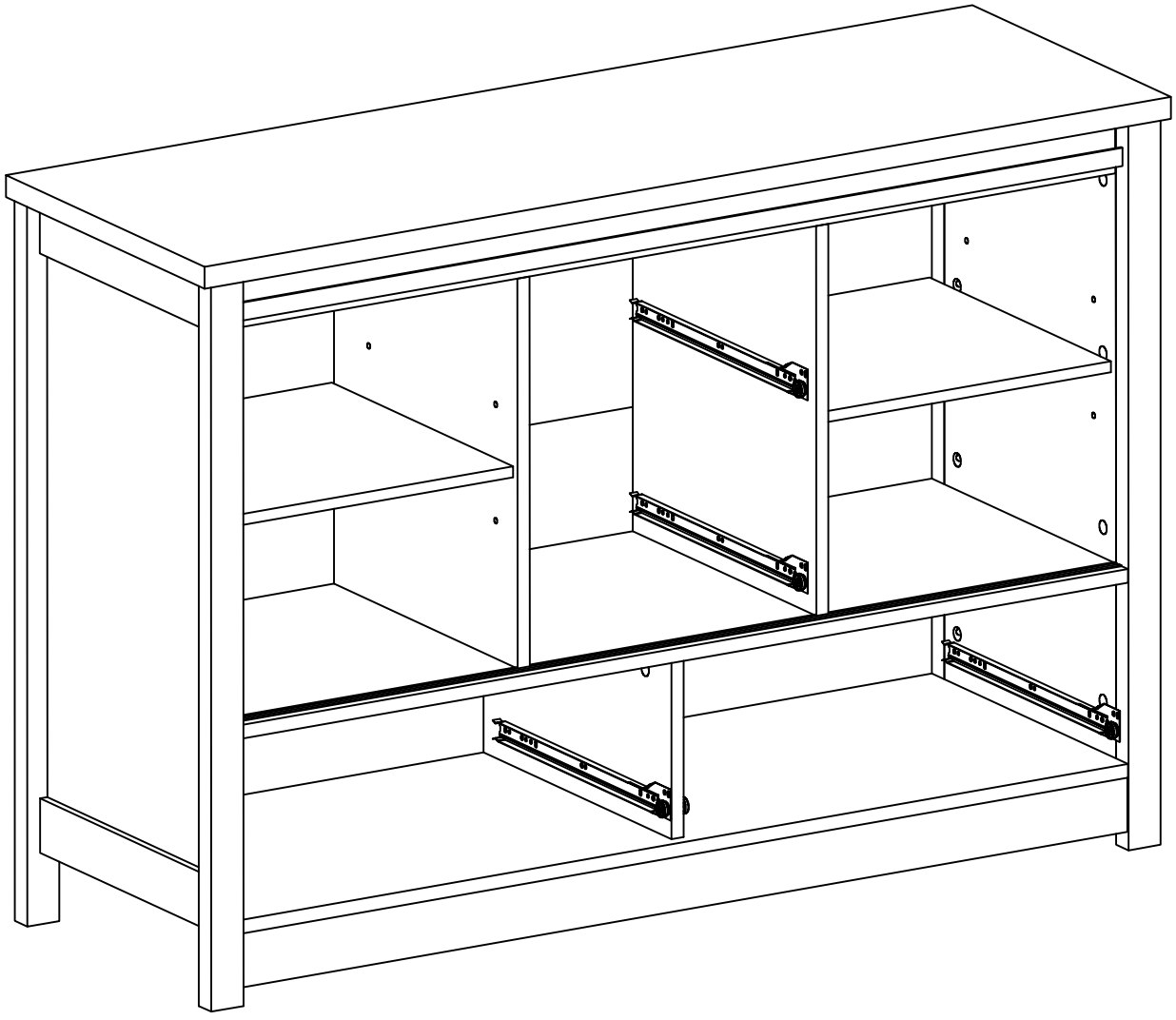

STEP 1

- Attach (A) to (2)&(3)&(4)&(5)&(6)&(7) as below shown

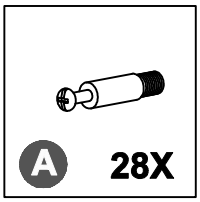

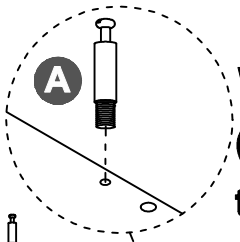

Warm Tips:
(A) should be screw to the small holes.

STEP 2

B 16X	C 8X

- Attach (C) to (2)&(3) as below shown
- Attach (4)&(5) to (2) as below shown
- Attach (6)&(7) to (3) as below shown
- Screw (B) to lock the (2)&(3) as below shown

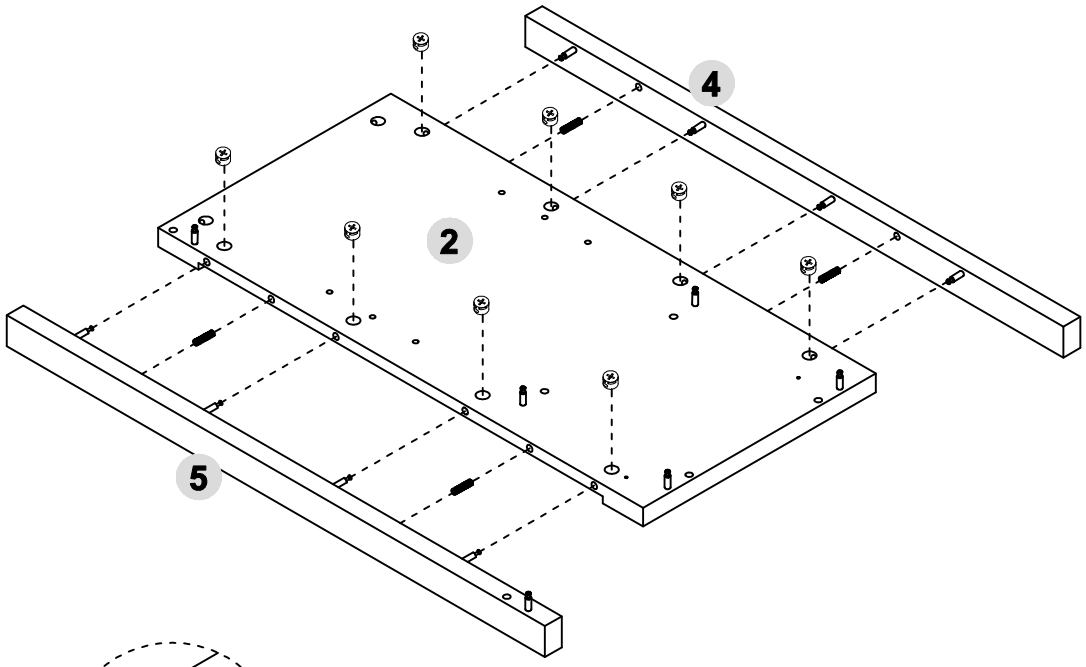

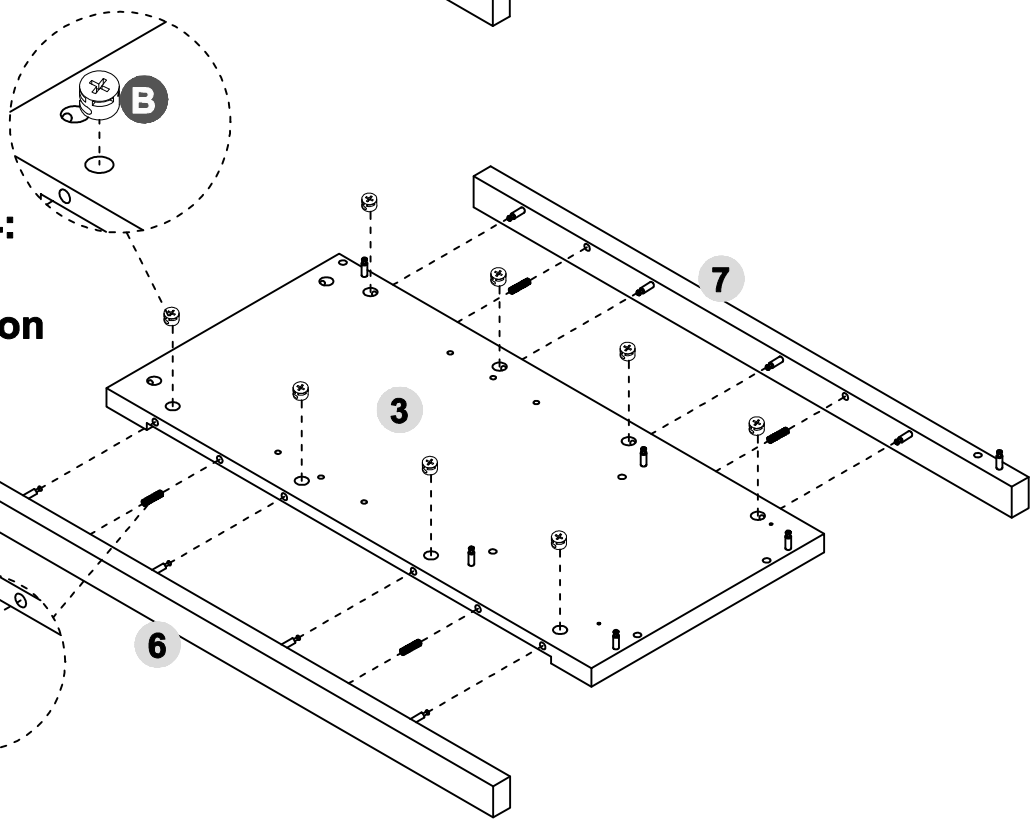

Warm Tips:
Refer to Page 4:
Cam lock
system operation

Warm Tips: **Make sure the 4 large pre-drilled holes are on the upside, (4)&(5) holes should be in the same side.**

STEP 3-1

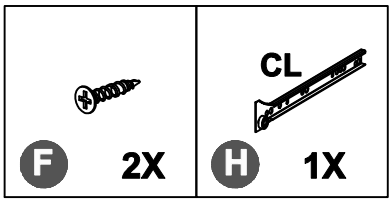

- Install the drawer slides (H) on the left side panel (2).
There is a CL sign on the track. We have 4 X (H), one batch (H) has one CL track. So we need to open 1 batches (H) to get 1 CL tracks.
- Screw (F) to tighten the track slides as belown shown.
Make sure the end with a roller of the track slide heads up to (5).

Make sure the 4 large pre-drilled holes are on the upside.

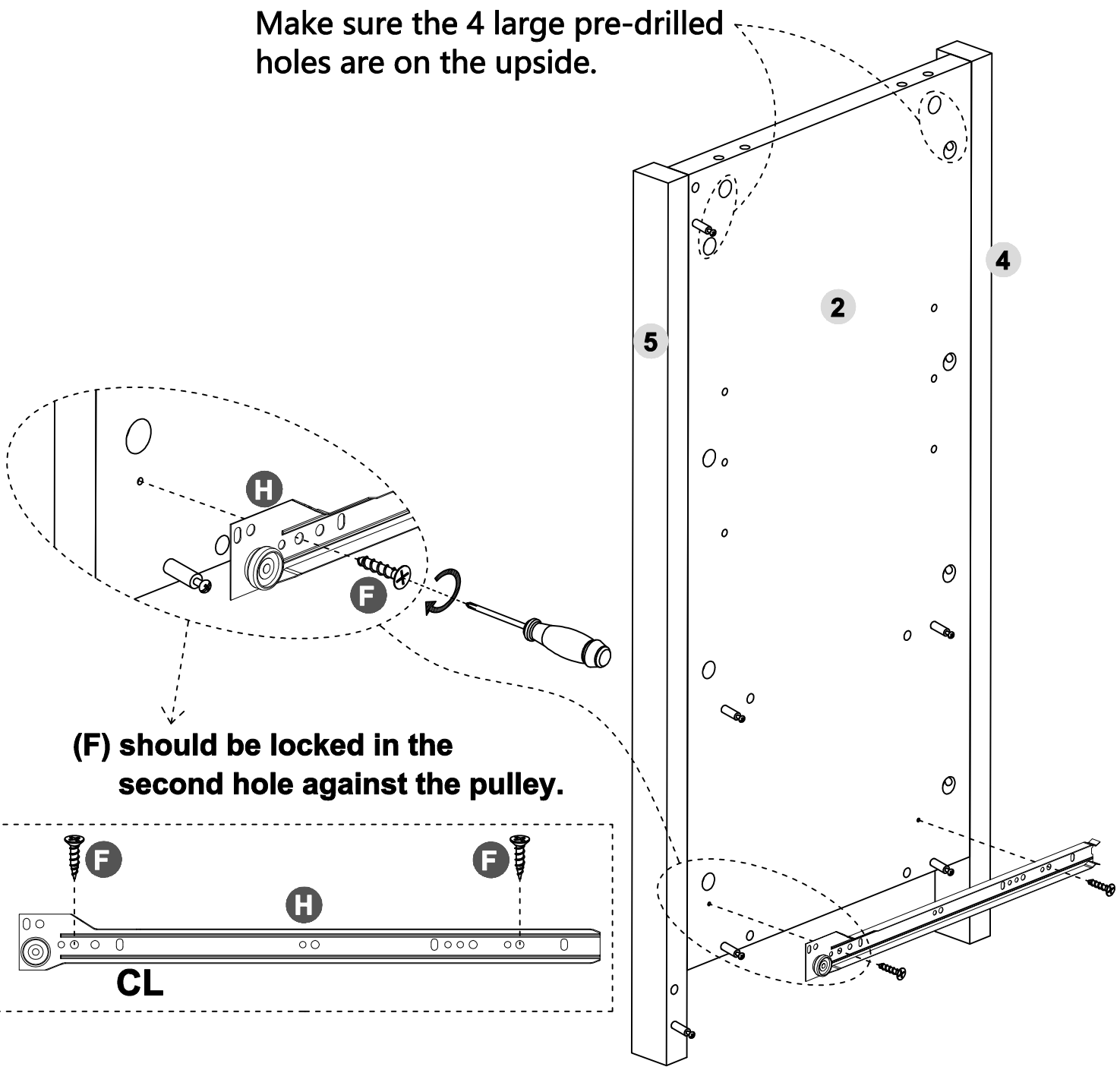

(F) should be locked in the second hole against the pulley.

STEP 3-2

- Screw (F) to tighten the track slides as belown shown.

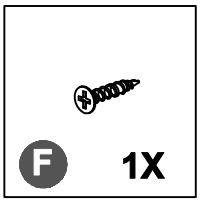

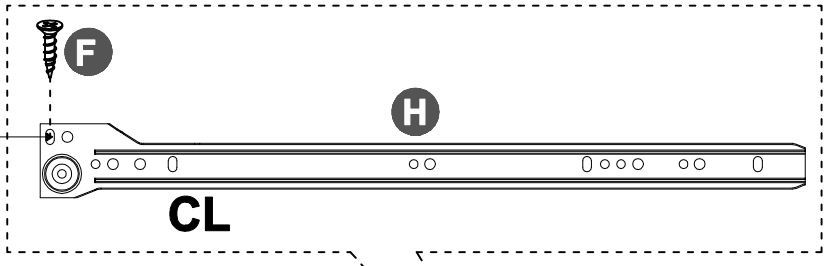

There are no pre-drilled holes corresponds to the UPPER row holes of the tightening. We need to confirm the position of the track slide, then screw the (F) on.

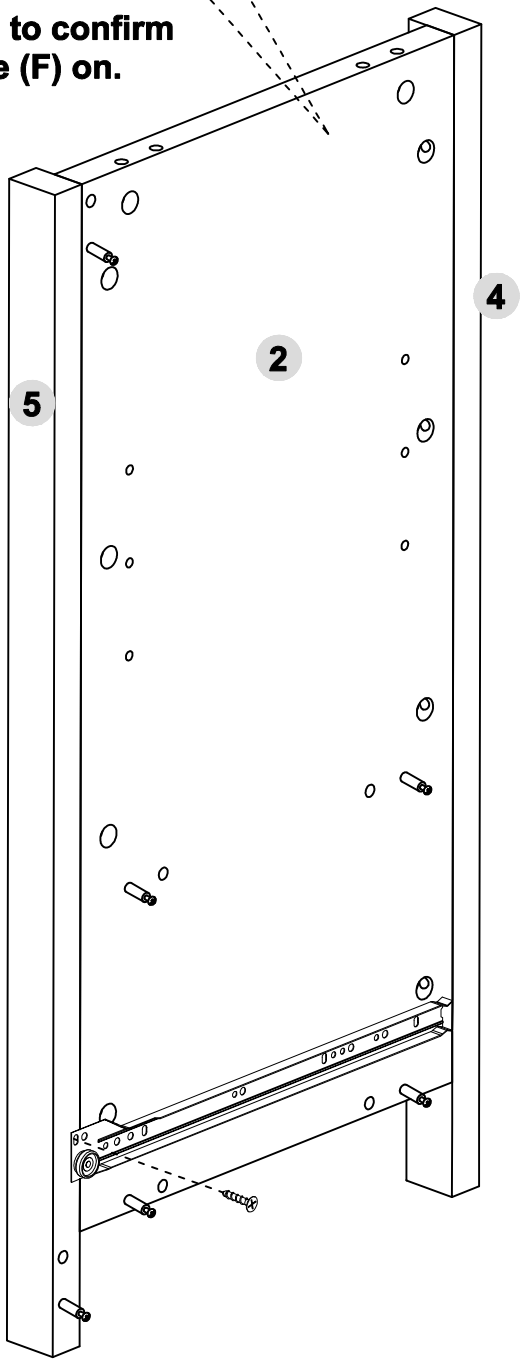

STEP 3-3

- **Please refer the below look and check carefully after you assembled 1X CL track slides.**
- **Make sure you used 3 x (F).**

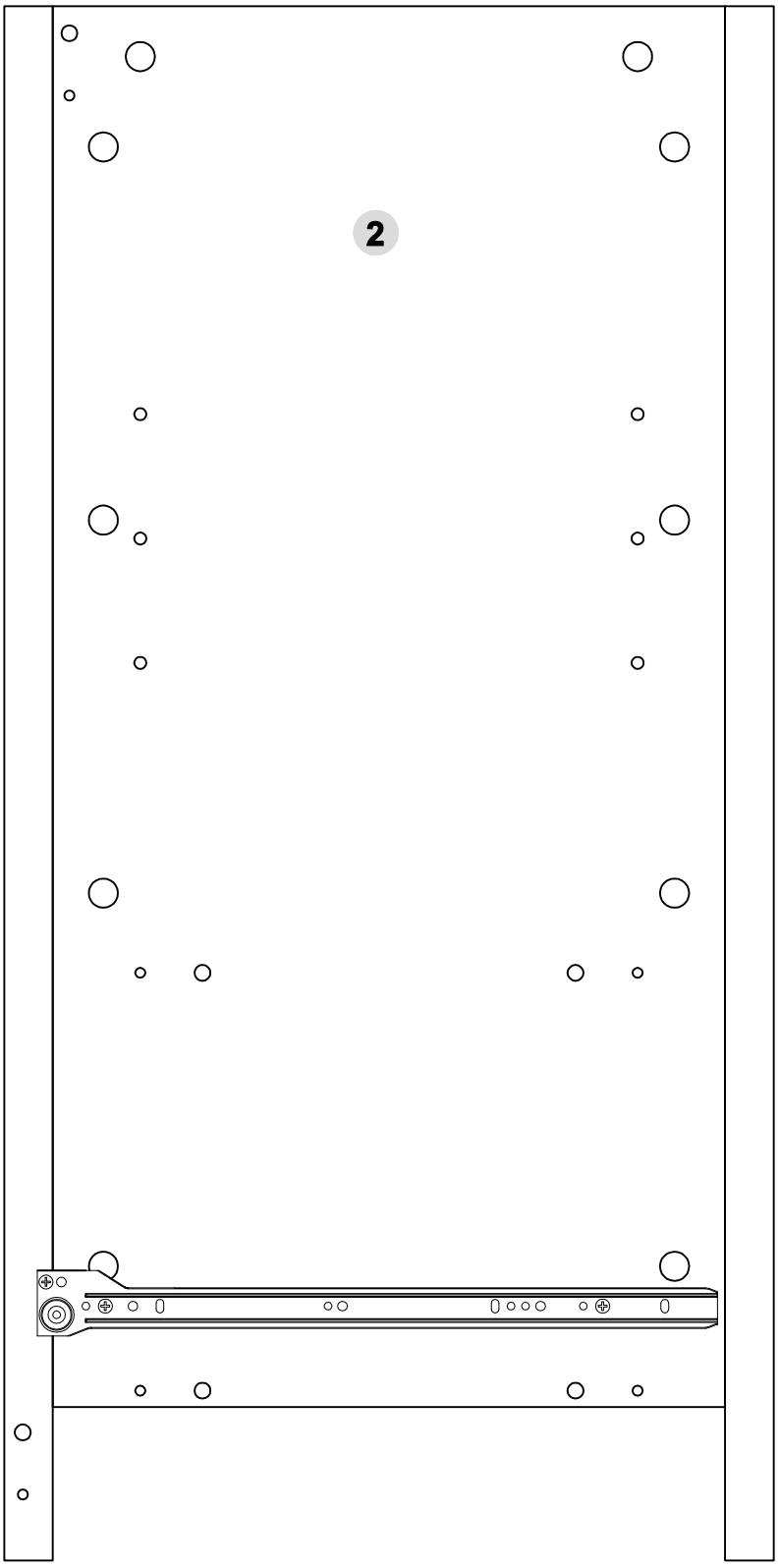

STEP 4-1

F	H
2X	1X

- Install the drawer slides (H) on the Right side panel (3).
There is a CR sign on the track. We have 4 X (H), one batch (H) has one CR track. So we need to open 1 batches (H) to get 1 CR tracks
- Screw (F) to tighten the track slides as belown shown.
Make sure the end with a roller of the track slide heads up to (7).

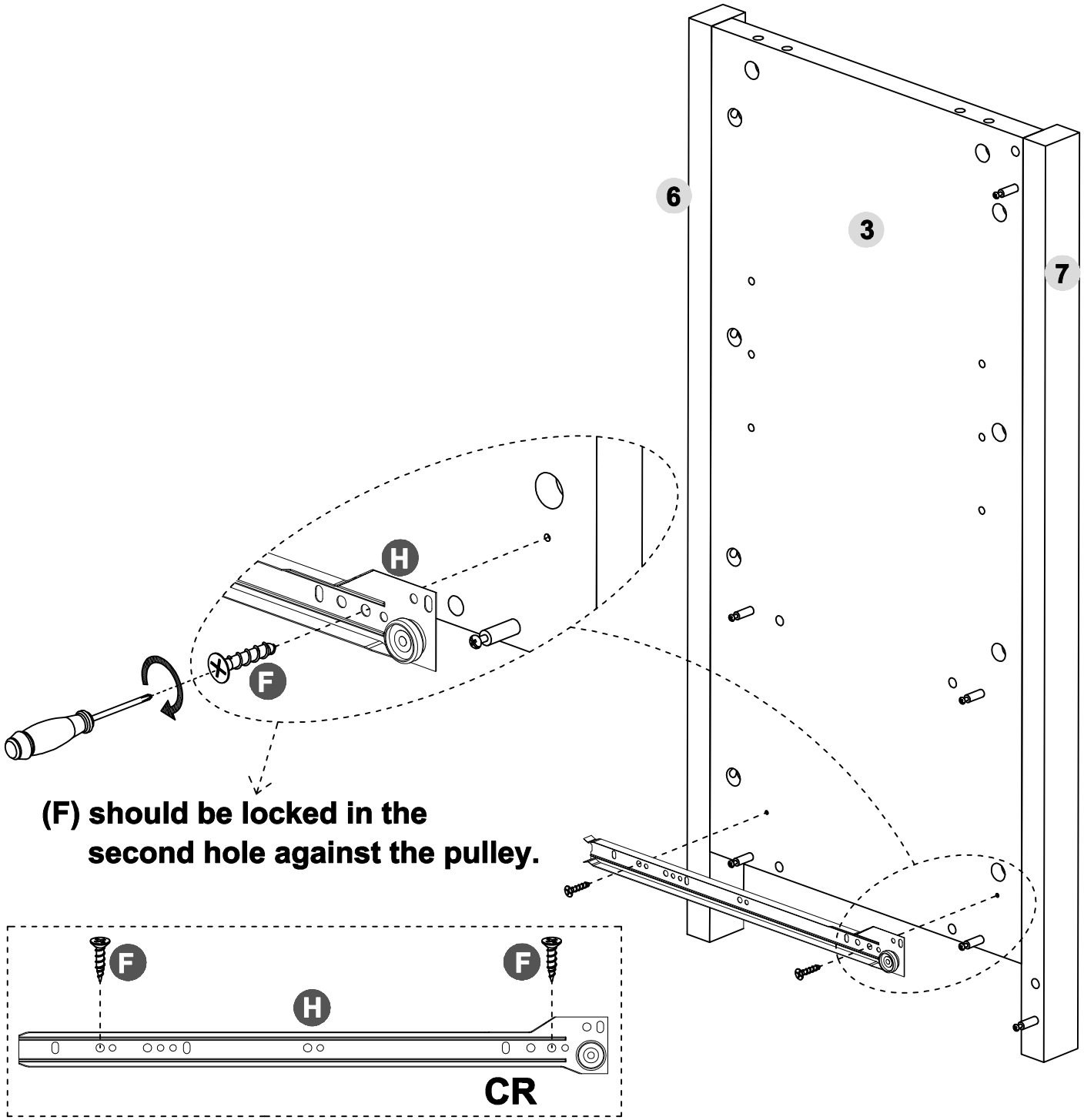

STEP 4-2

- Screw (F) to tighten the track slides as belown shown.

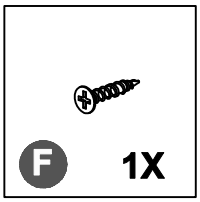

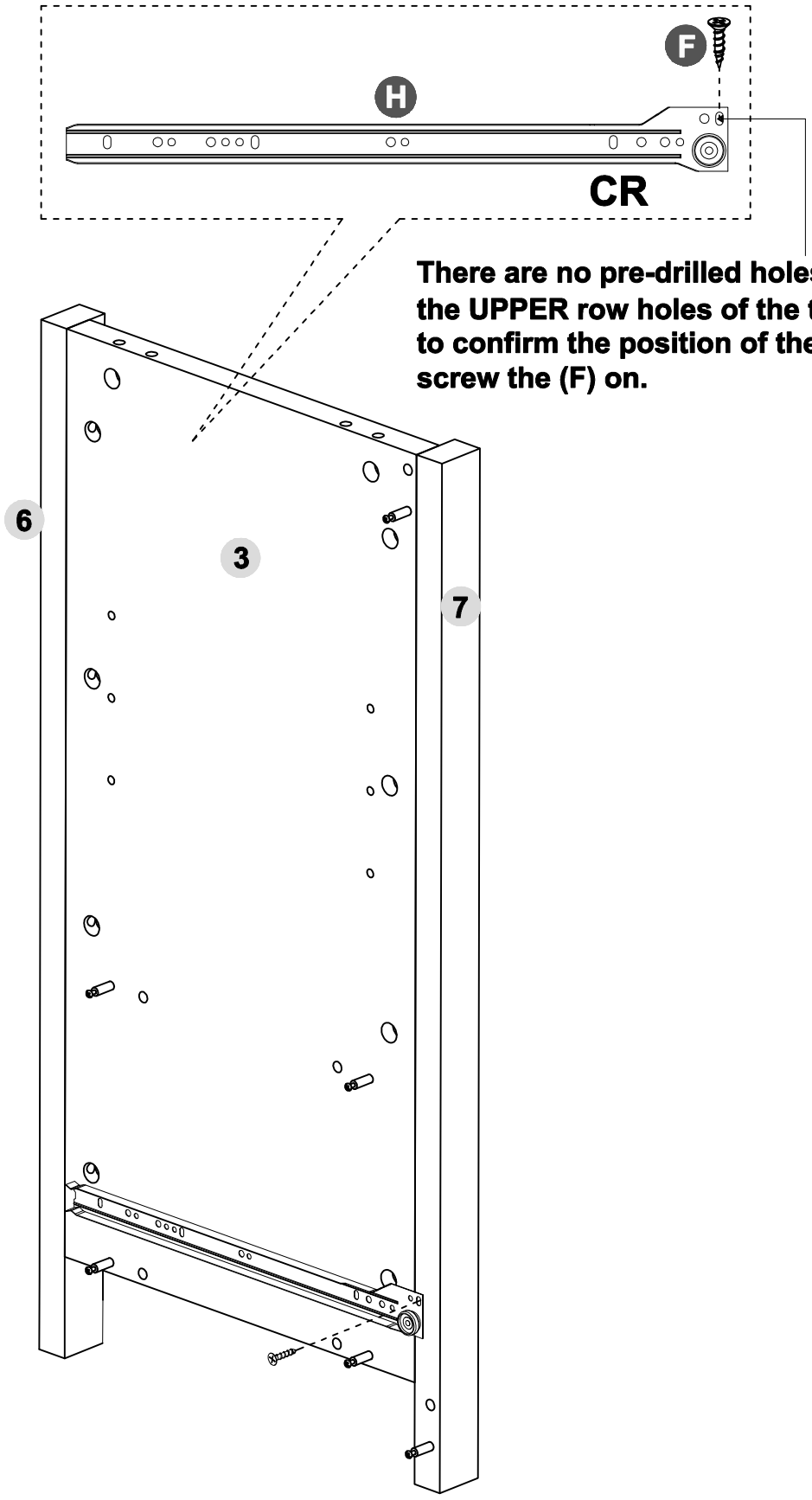

There are no pre-drilled holes corresponds to the UPPER row holes of the tightening. We need to confirm the position of the track slide, then screw the (F) on.

STEP 4-3

- **Please refer the below look and check carefully after you assembled 1X CR track slides.**
- **Make sure you used 3 x (F).**

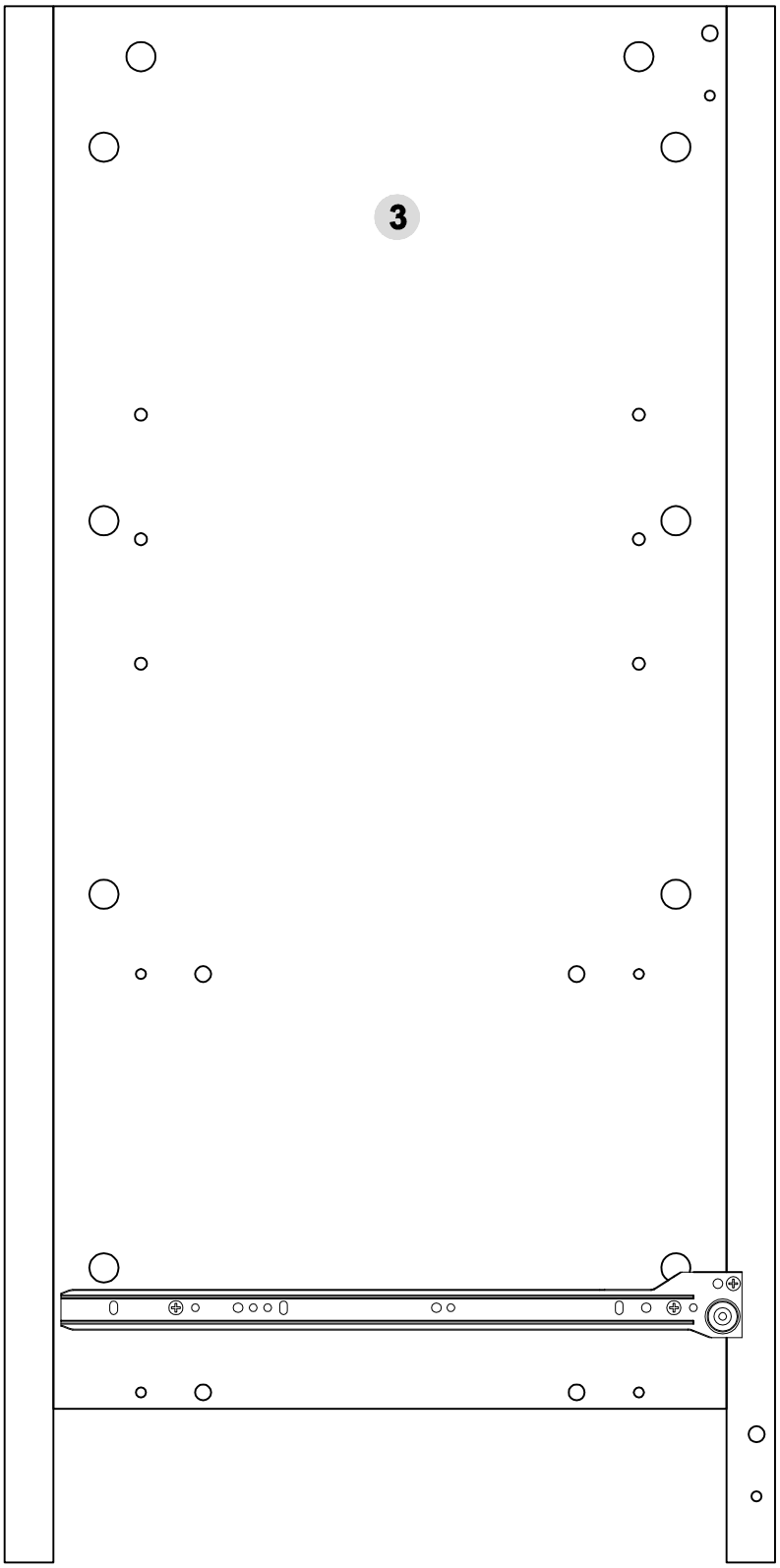

STEP 5-1

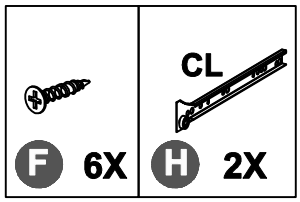

- Install the drawer slides (H) on the right side of Middle panel (8). There is a CL sign on the track. We have 4 X (H), one batch (H) has one CL track. So we need to open 2 batches (H) to get 2 CL tracks.
- Install CL track on the side without 2 big holes of panel (8).
- Screw (F) to tighten the track slides as belown shown.

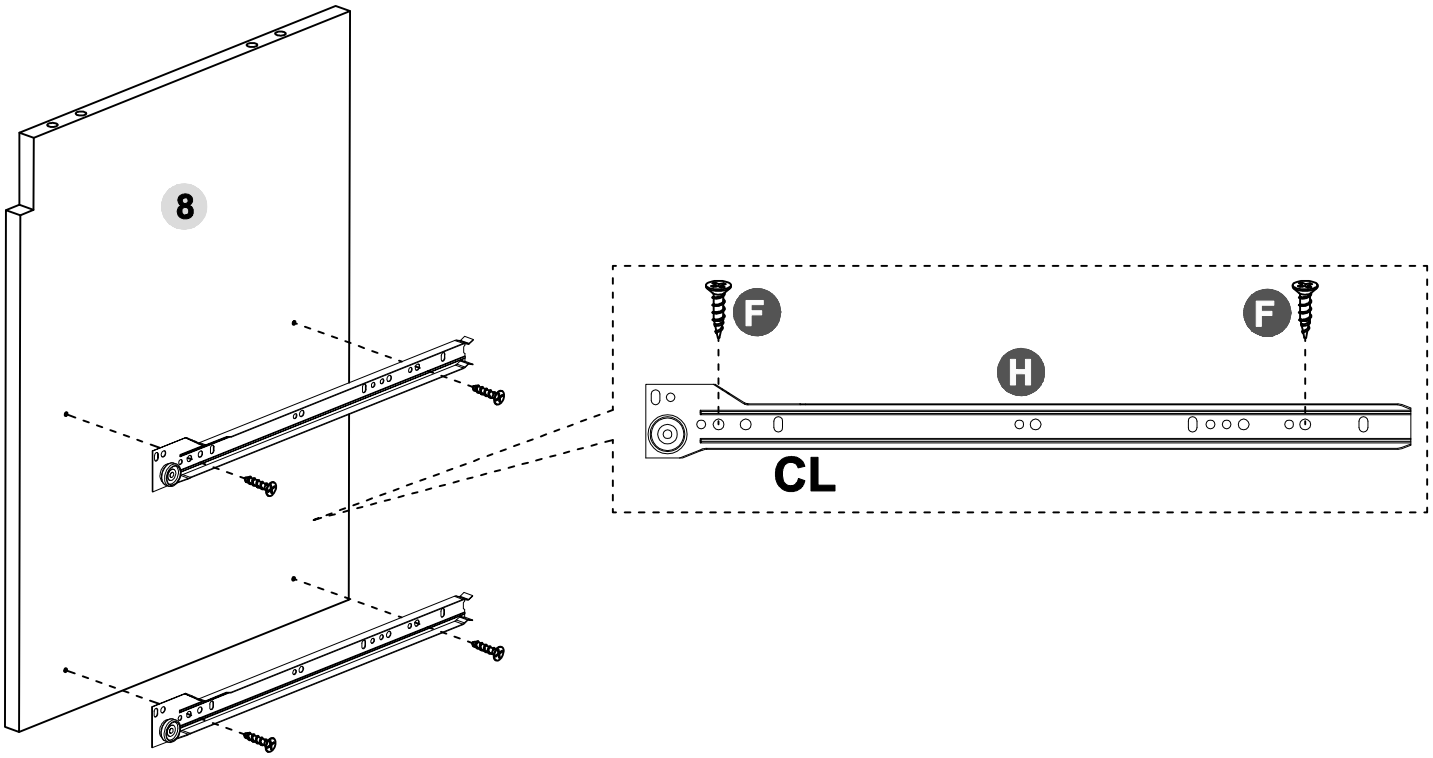

- Screw (F) to tighten the track slides as belown shown.

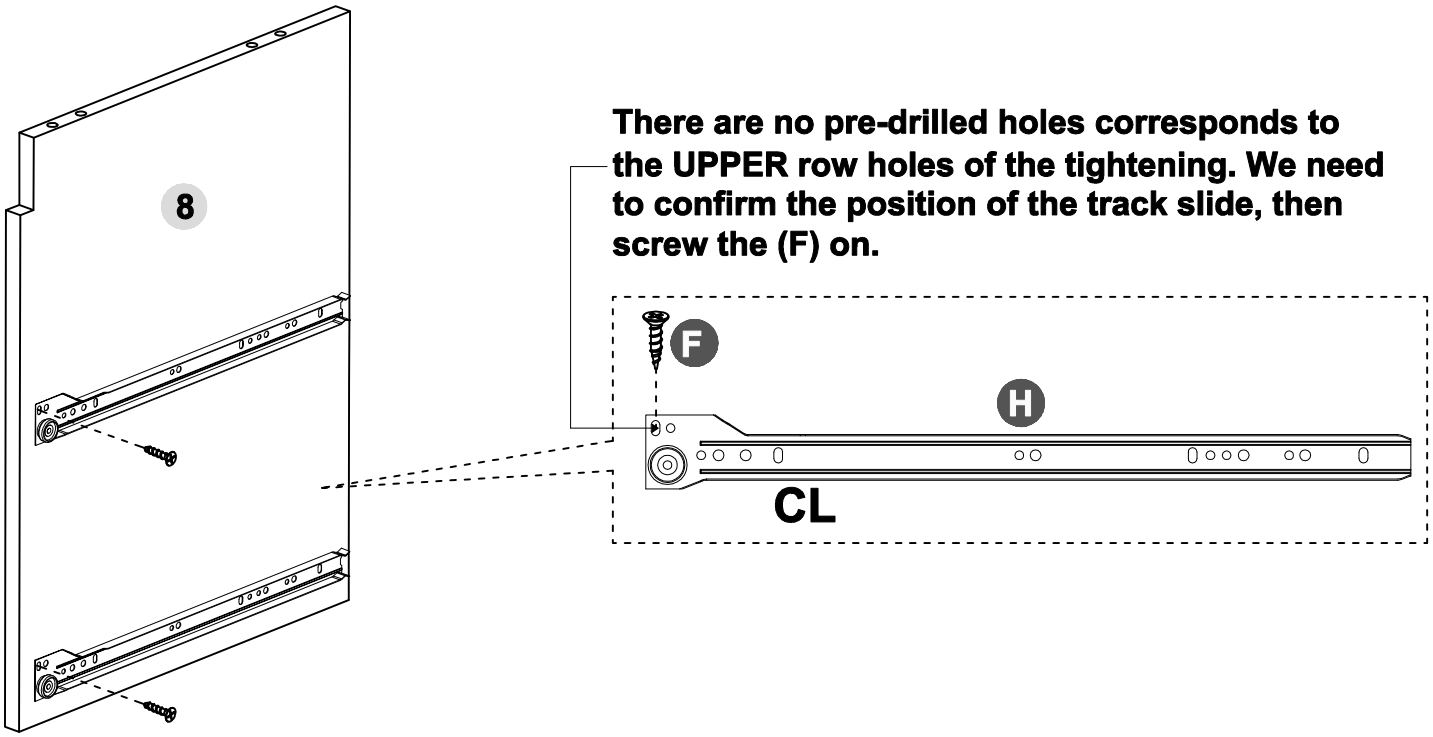

STEP 5-2

- On one side of panel (8), should have 2 same track slides.

CL tracks should be assembled on this side without holes of the panel (8)

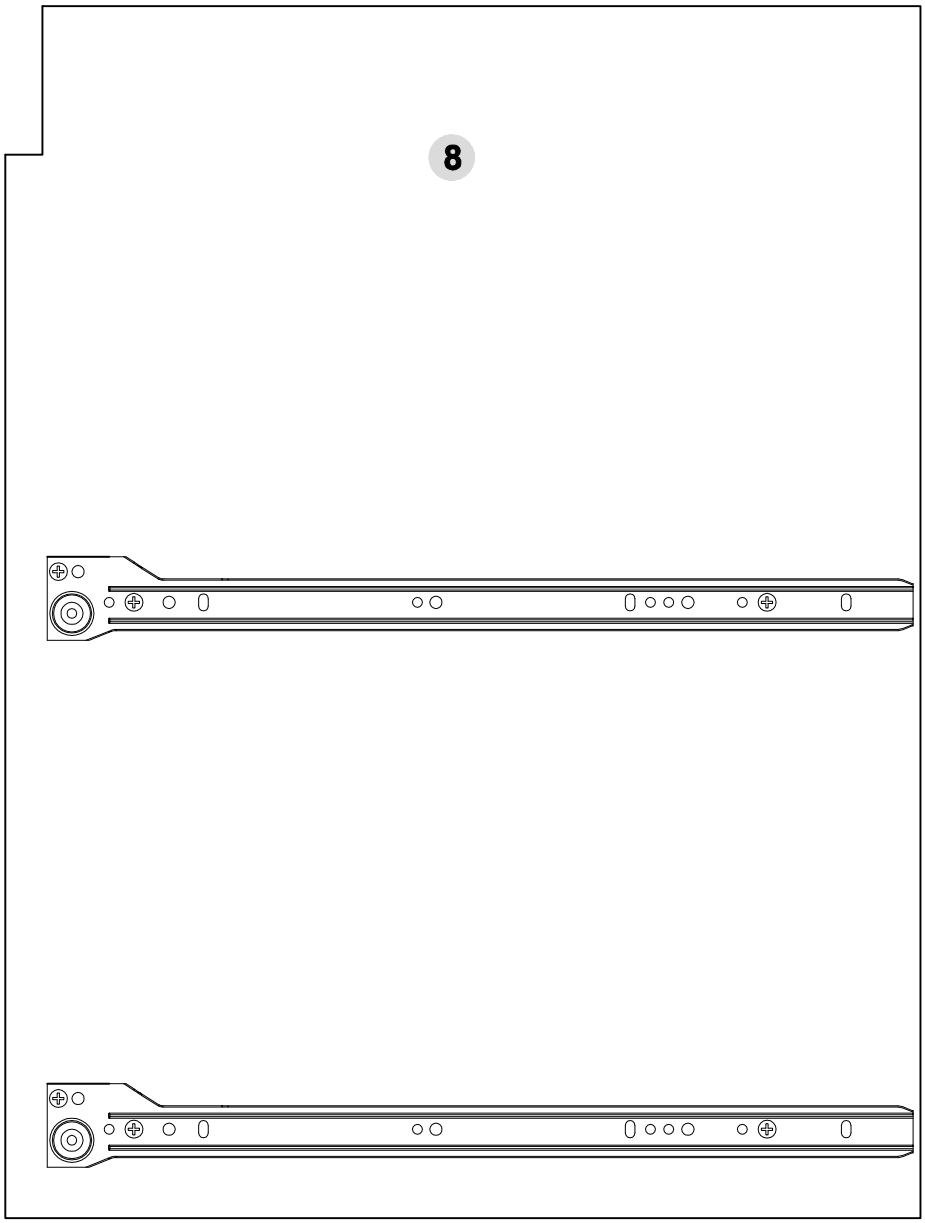

STEP 6-1

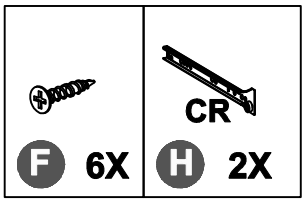

- Install the drawer slides (H) on the left side of Middle panel (9). There is a CR sign on the track. We have 4 X (H), one batch (H) has one CR track. So we need to open 2 batches (H) to get 2 CR tracks.
- Install CR track on the side without 2 big holes of panel (9).
- Screw (F) to tighten the track slides as belown shown.

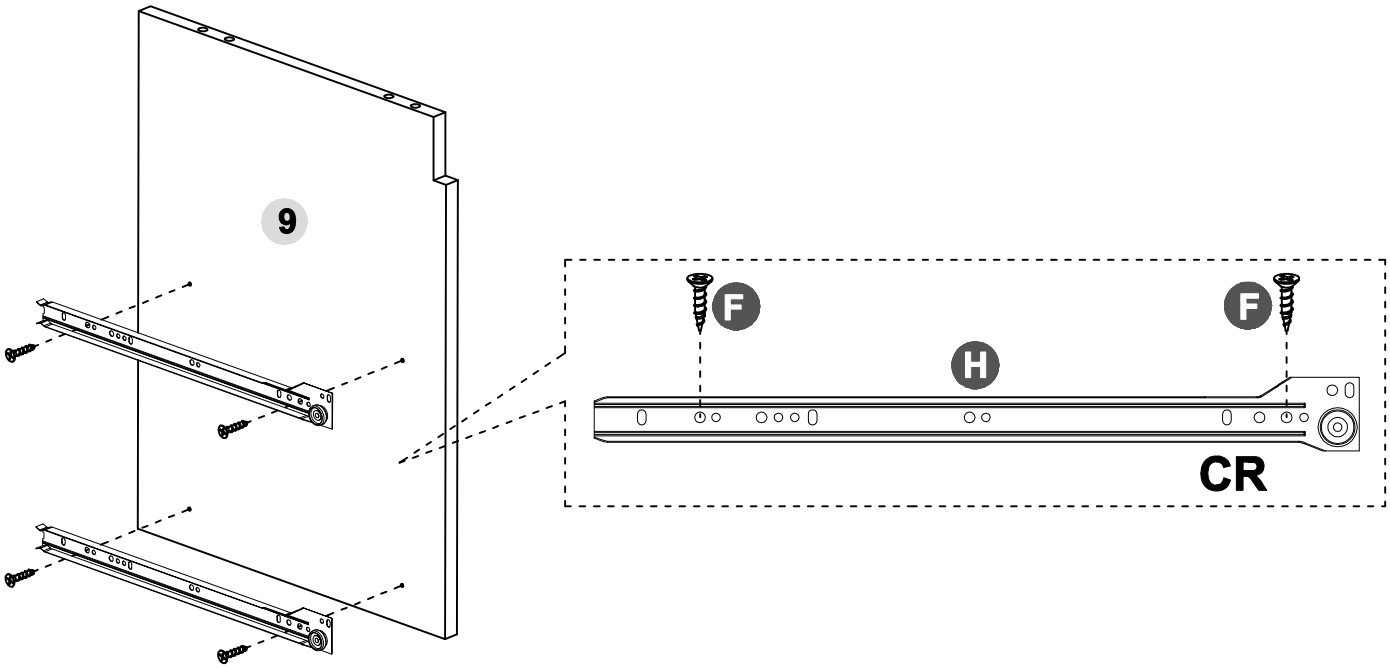

- Screw (F) to tighten the track slides as belown shown.

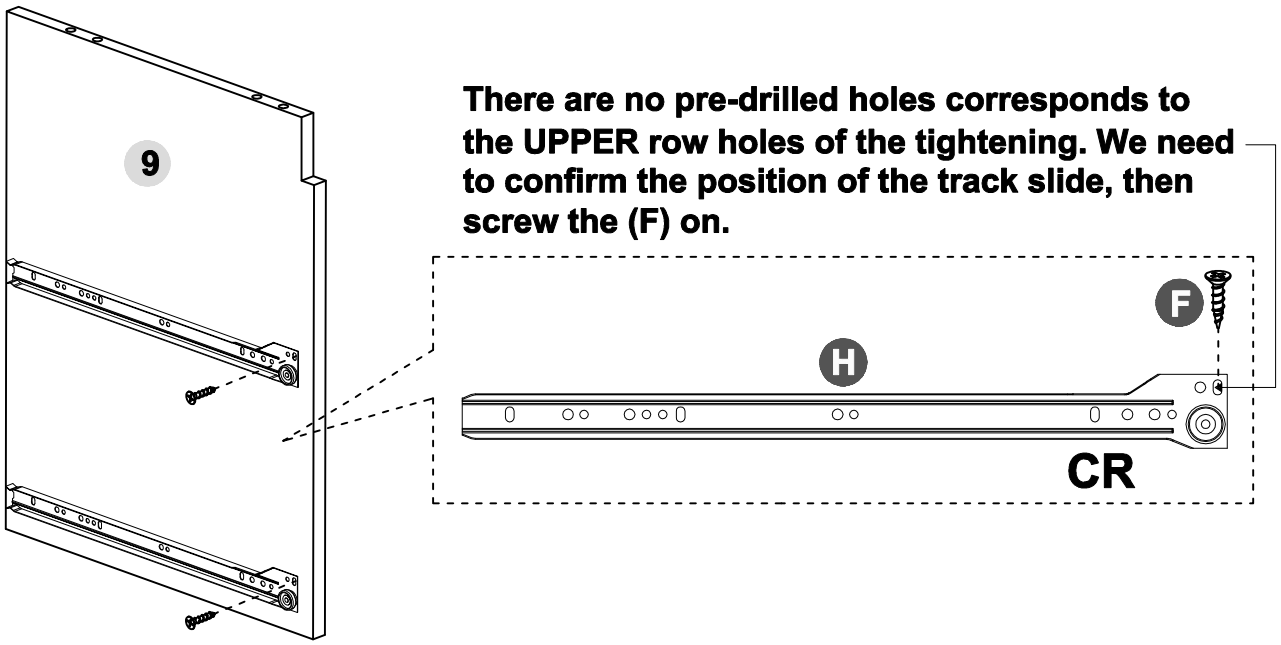

STEP 6-2

- On one side of panel (9), should have 2 same track slides.

CR tracks should be assembled on this side without holes of the panel (9)

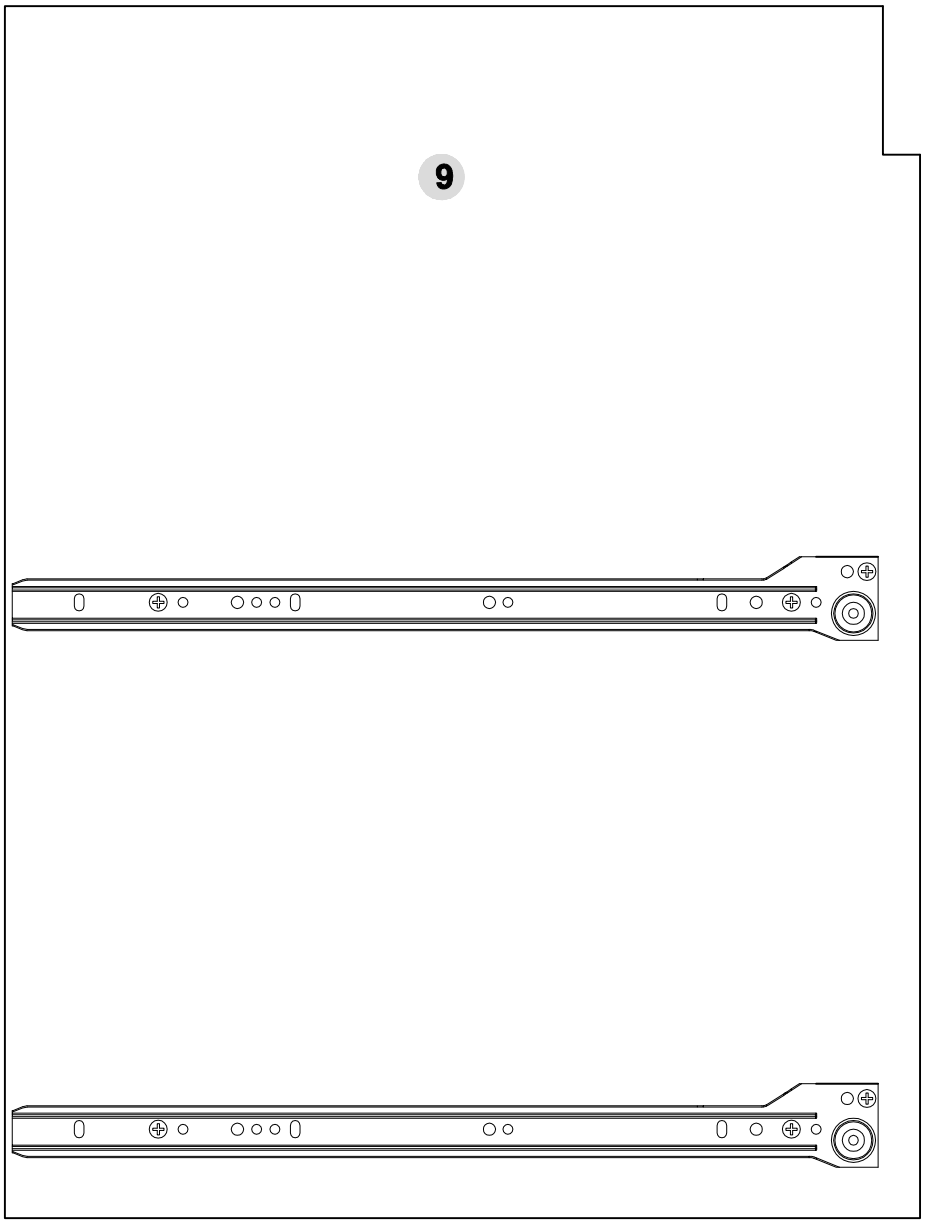

STEP 7-1

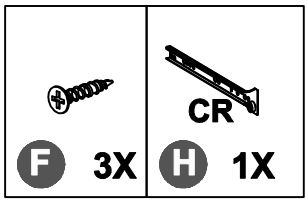

- Install the drawer slides (H) on the left side of Middle panel (10). There is a CR sign on the track. We have 4 X (H), one batch (H) has one CR track. So we need to open 1 batches (H) to get 1 CR tracks.
- Install CR track on the side with 2 big holes of panel (10).
- Screw (F) to tighten the track slides as belown shown.

The side with 2 big holes of the panel (10) should be assembled the CR track slide.

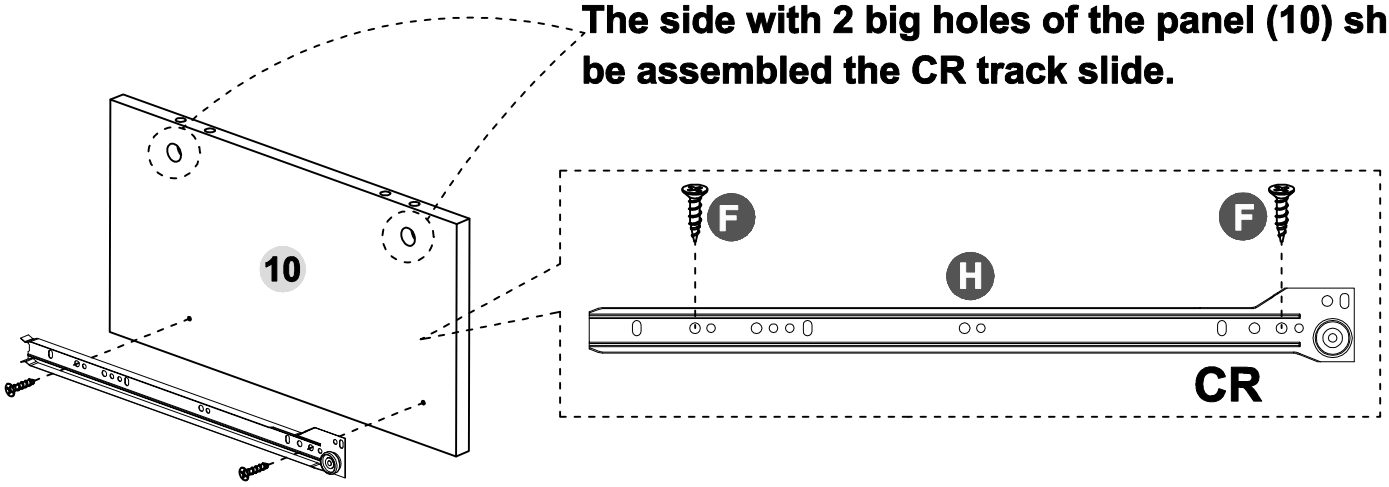

- Screw (F) to tighten the track slides as belown shown.

There are no pre-drilled holes corresponds to the UPPER row holes of the tightening. We need to confirm the position of the track slide, then screw the (F) on.

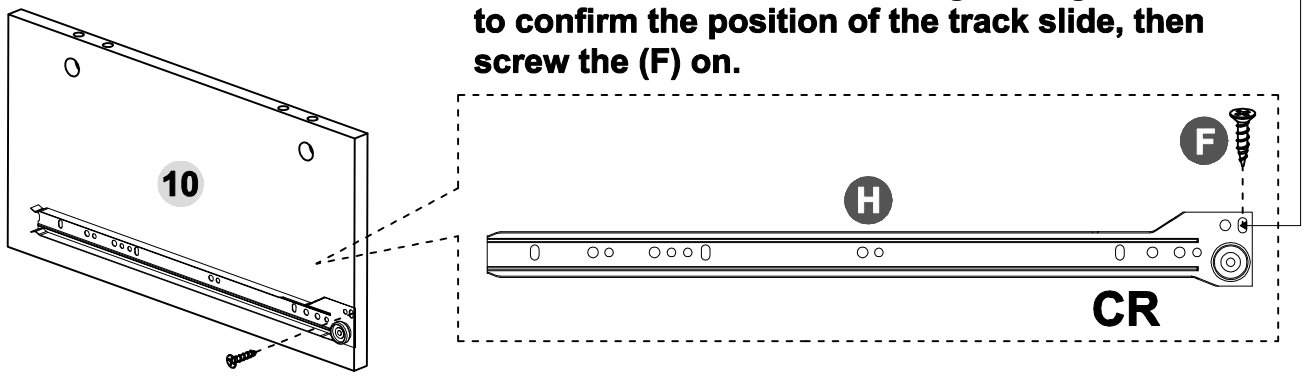

STEP 7-2

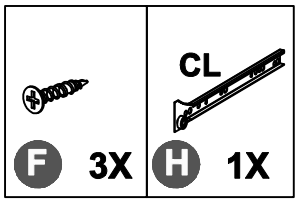

- Install the drawer slides (H) on the right side of Middle panel (10). There is a CL sign on the track. We have 4 X (H), one batch (H) has one CL track. So we need to open 1 batches (H) to get 1 CL tracks.
- Install CL track on the side without 2 big holes of panel (10).
- Screw (F) to tighten the track slides as belown shown.

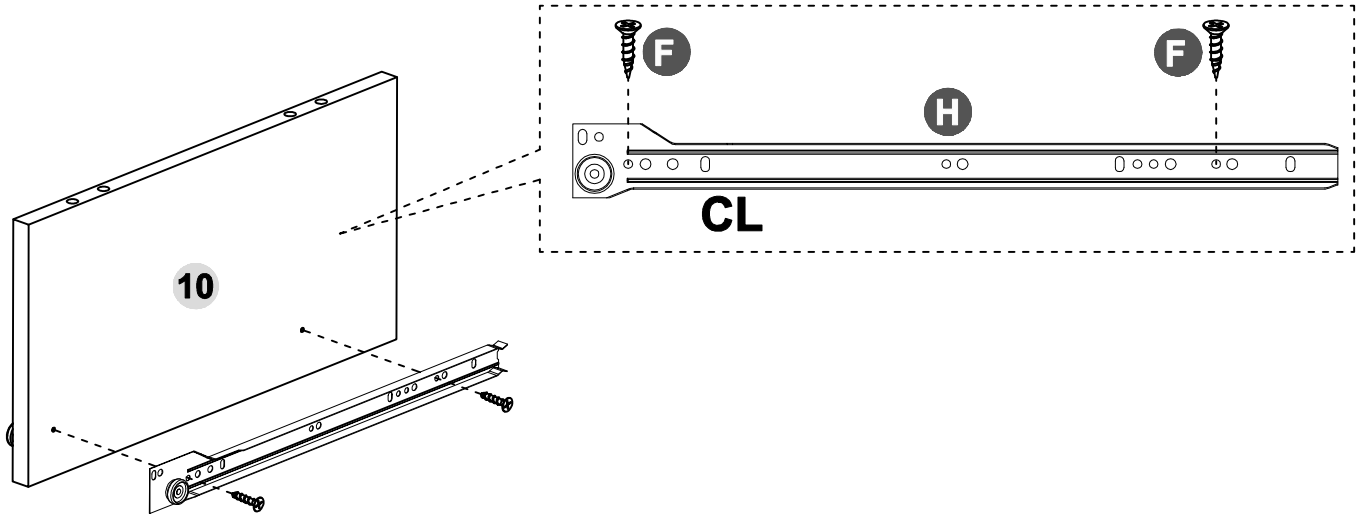

- Screw (F) to tighten the track slides as belown shown.

There are no pre-drilled holes corresponds to the UPPER row holes of the tightening. We need to confirm the position of the track slide, then screw the (F) on.

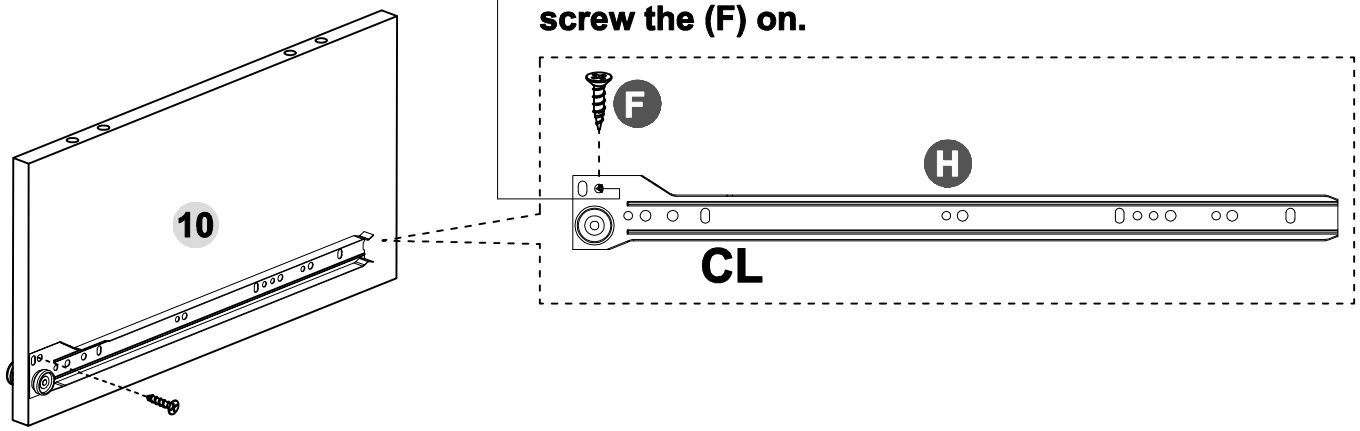

STEP 7-3

- Repeat the last step to assemble the CL and CR tracks on another panel (10).
- On one panel (10), make sure the end with roller of the 2 track slides are in one direction

CL track should be assembled on this side without holes of the panel (10)

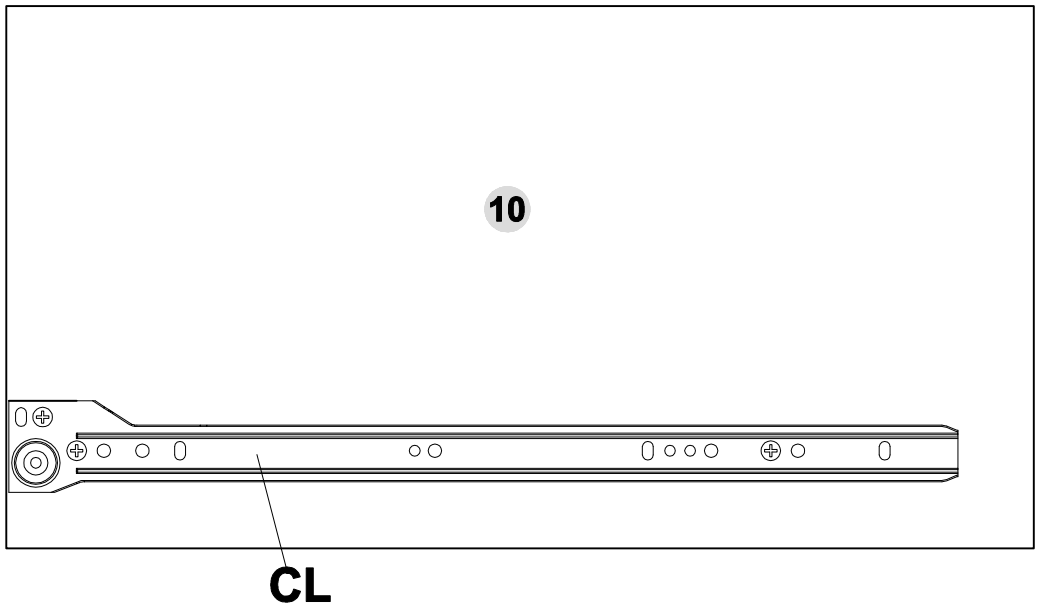

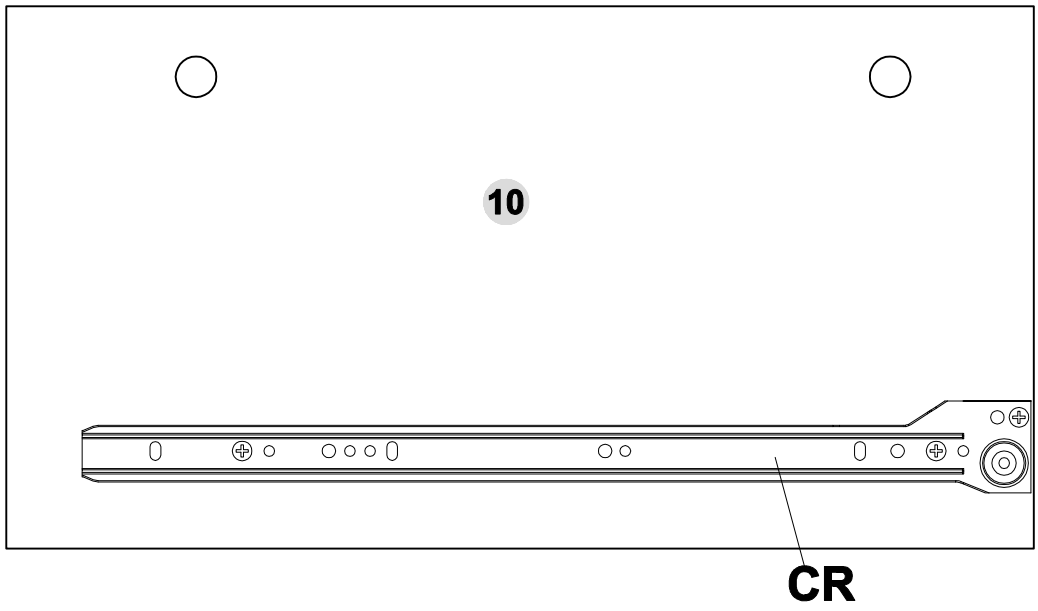

CR track should be assembled on this side with 2 holes of the panel (10)

STEP 8

- Screw (A) to (14) as below shown
- Screw (C) to (8)&(9) as below shown
- Screw (M) to lock (14) to the (8)&(9) as below shown

A 2X	C 4X	M 4X

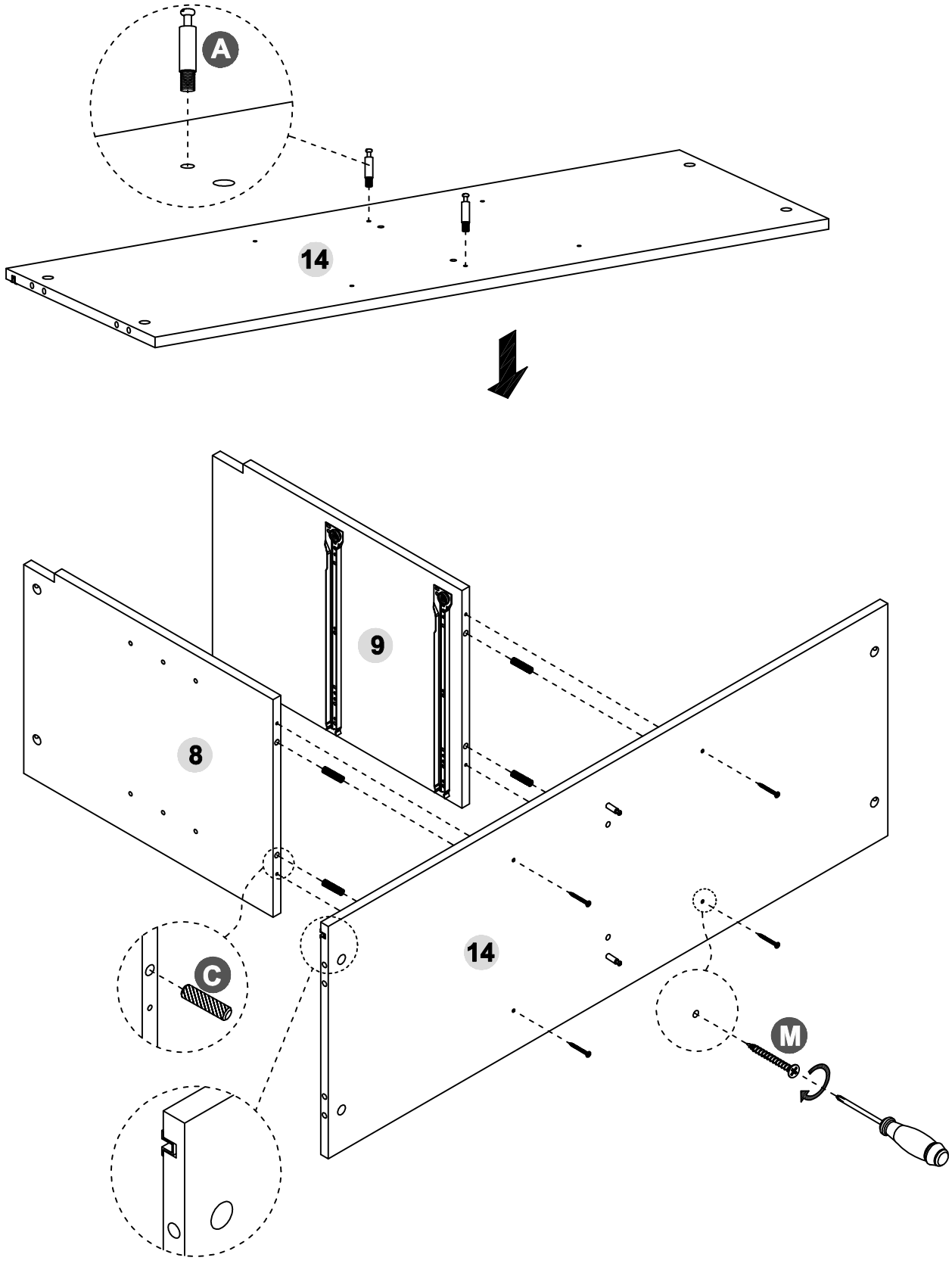

STEP 9

- Screw (Q) to lock (11) to the (12) as below shown
- Screw (A)&(C) to (15) as below shown
- Screw (B) to (16)&(15) as below shown

A 4X	B 4X	C 2X

Q 4X

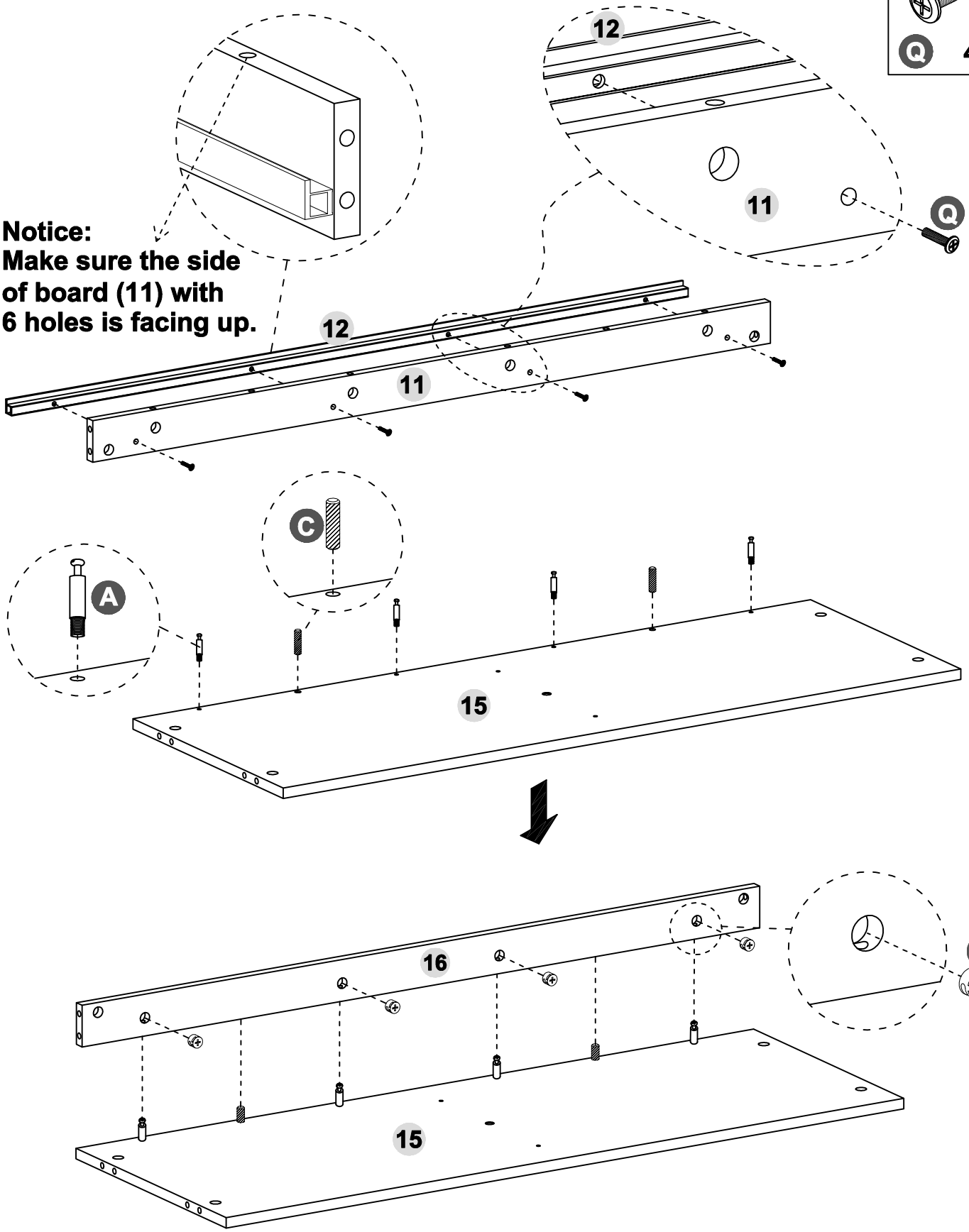

STEP 10

- Screw (C) to (10) as below shown
- Screw (B) to (10)&(14) as below shown
- Screw (M) to lock (15) to the (10) as below shown

 B 2X	 C 4X	 M 2X

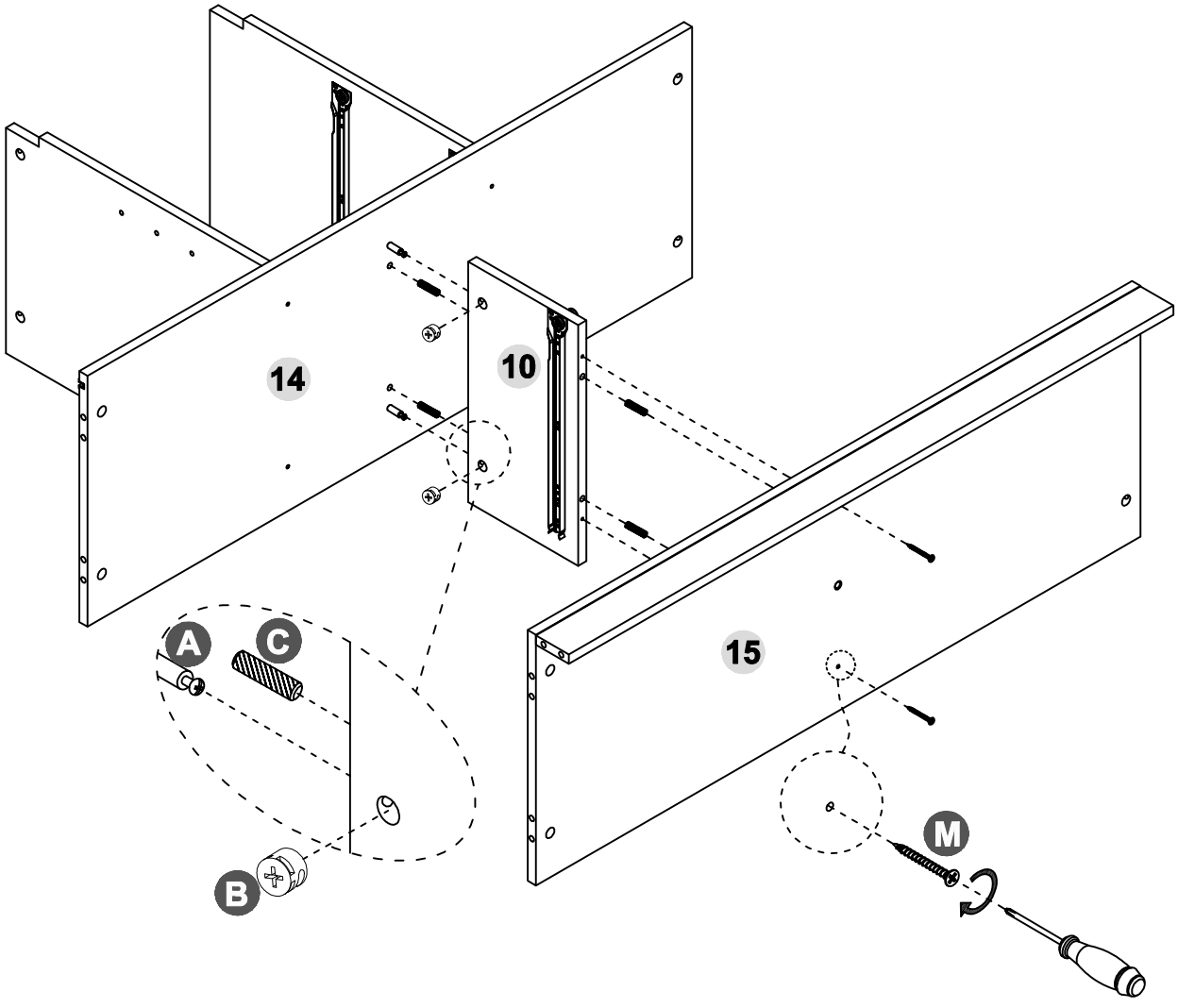

STEP 11

- Screw (C) to (11)&(14)&(15)&(16) as below shown
- Screw (B) to (2)&(11) (14) (15) (16) as below shown

 B 6X	 C 6X

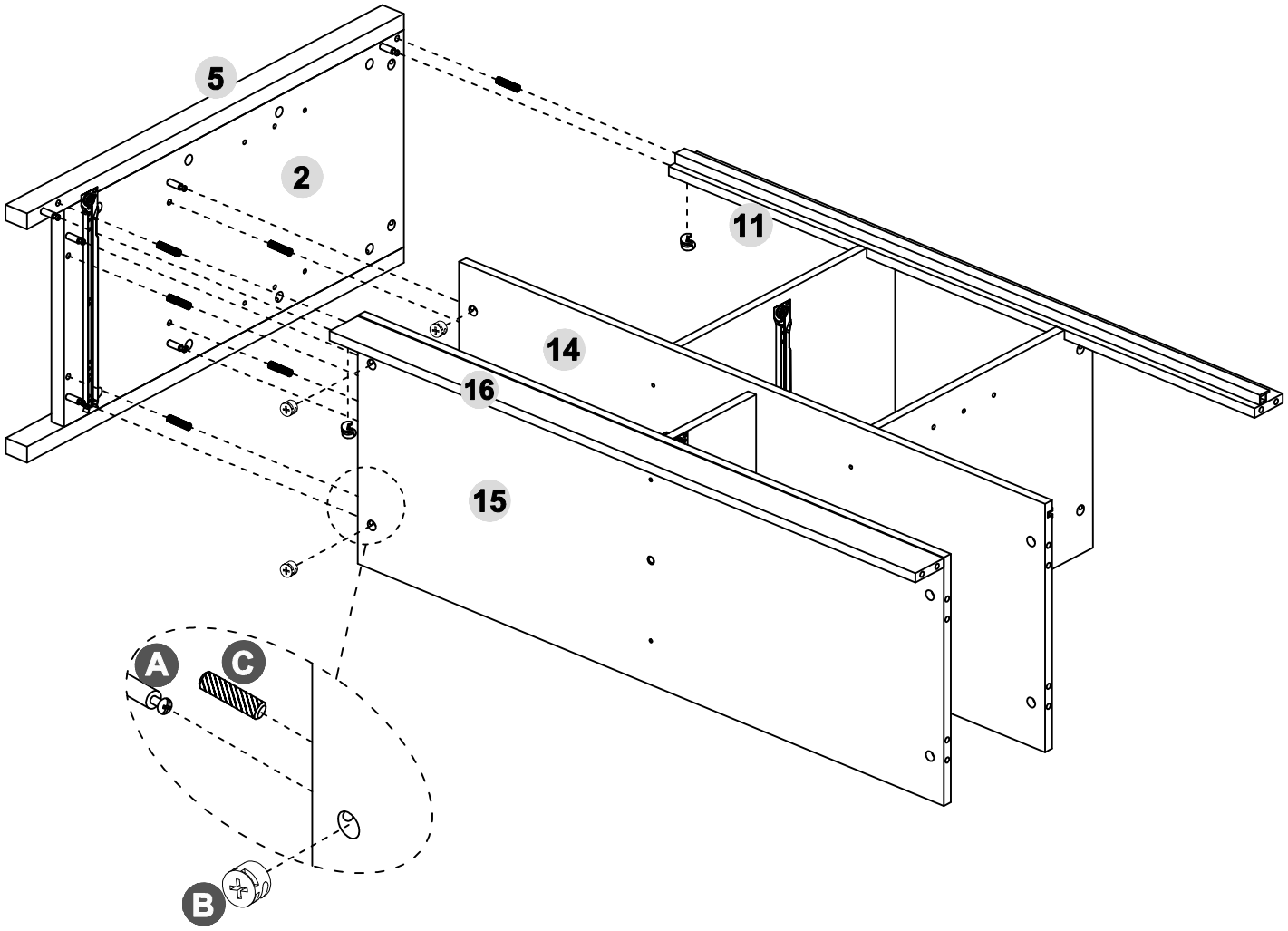

STEP 12

- Screw (C) to (11)&(14)&(15)&(16) as below shown
- Screw (B) to (3)&(11) (14) (15) (16) as below shown

 B 6X	 C 6X

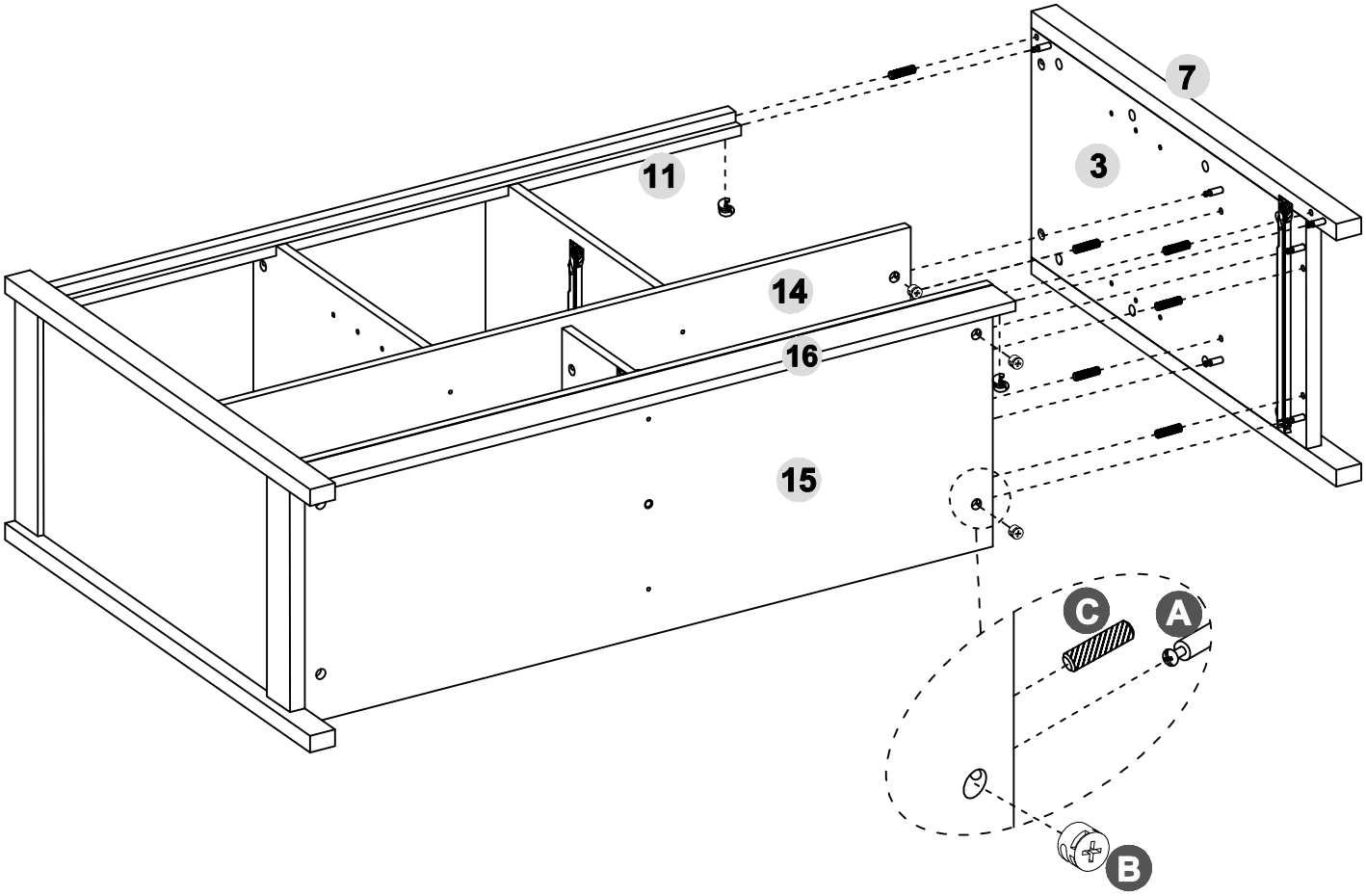

STEP 13

- Screw (V) to lock (17) to the (15) as below shown
- Screw (W) to (17) as below shown

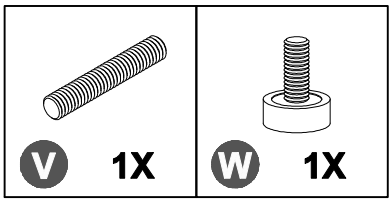

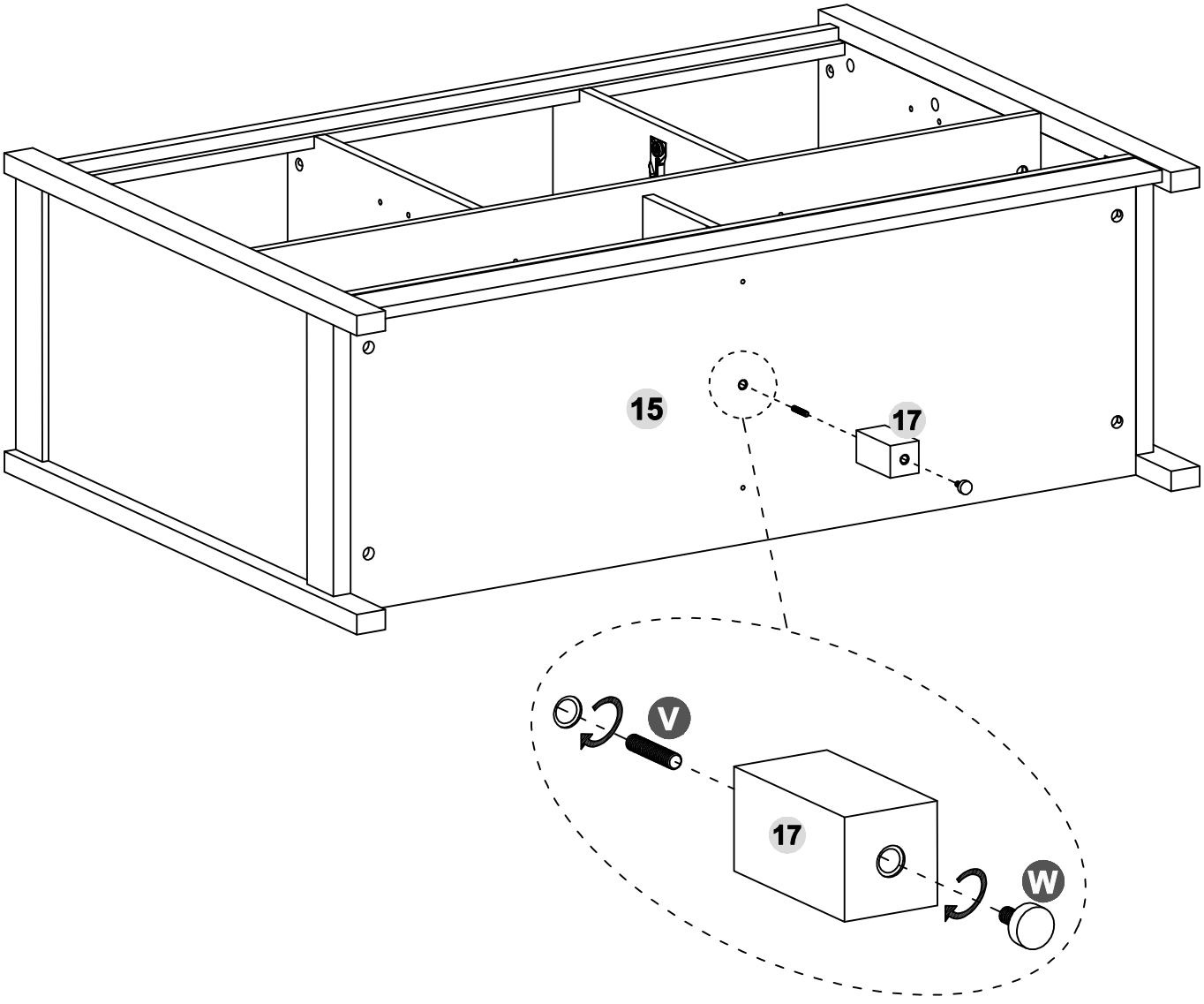

STEP 14

- Screw (A) to (1) as below shown
- Screw (C) to (2)&(3)&(8)&(9)&(11) as below shown
- Flip (1) , attach (1) to (2)&(3)&(8)&(9)&(11) as below shown
- Screw (B) to lock the (2)&(3)&(8)&(9)&(11) as below shown

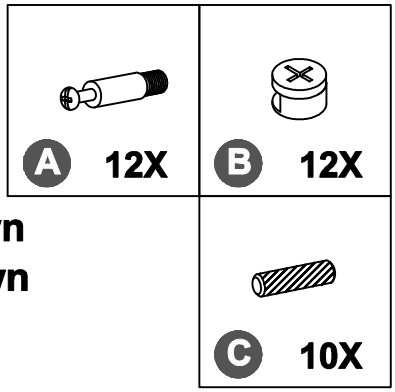

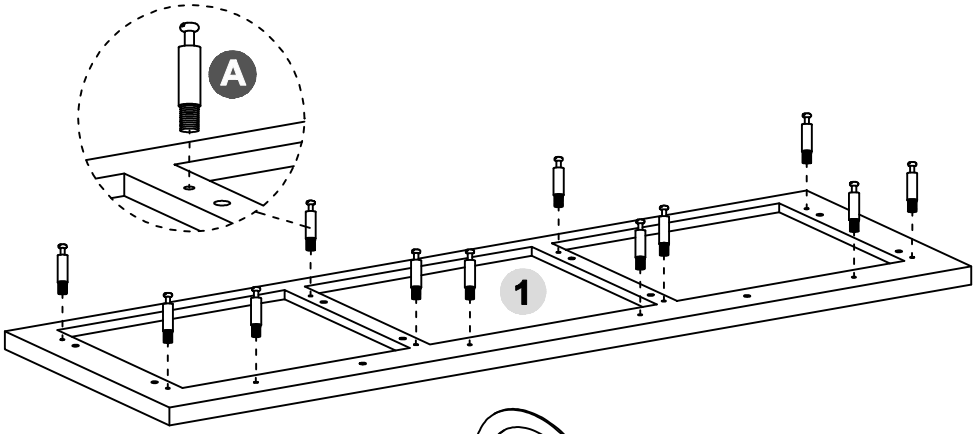

180°

The side with pre-drilled holes is the back of the panel (1).

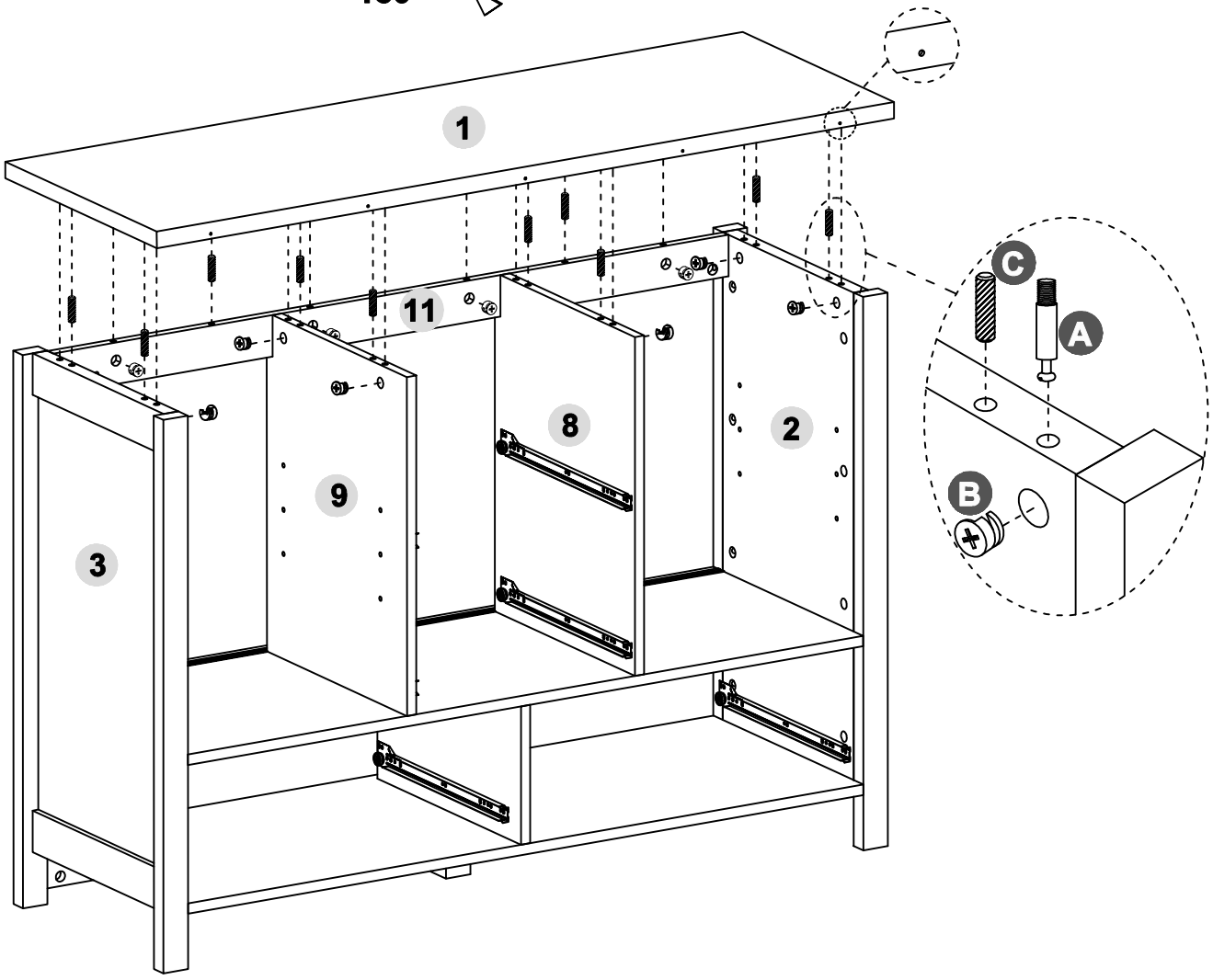

STEP 15

- Screw (G) to Back panel (18) as below shown
- Stick (T) to (1)&(18), use (G) locked

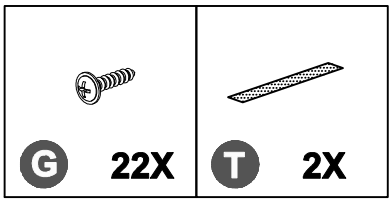

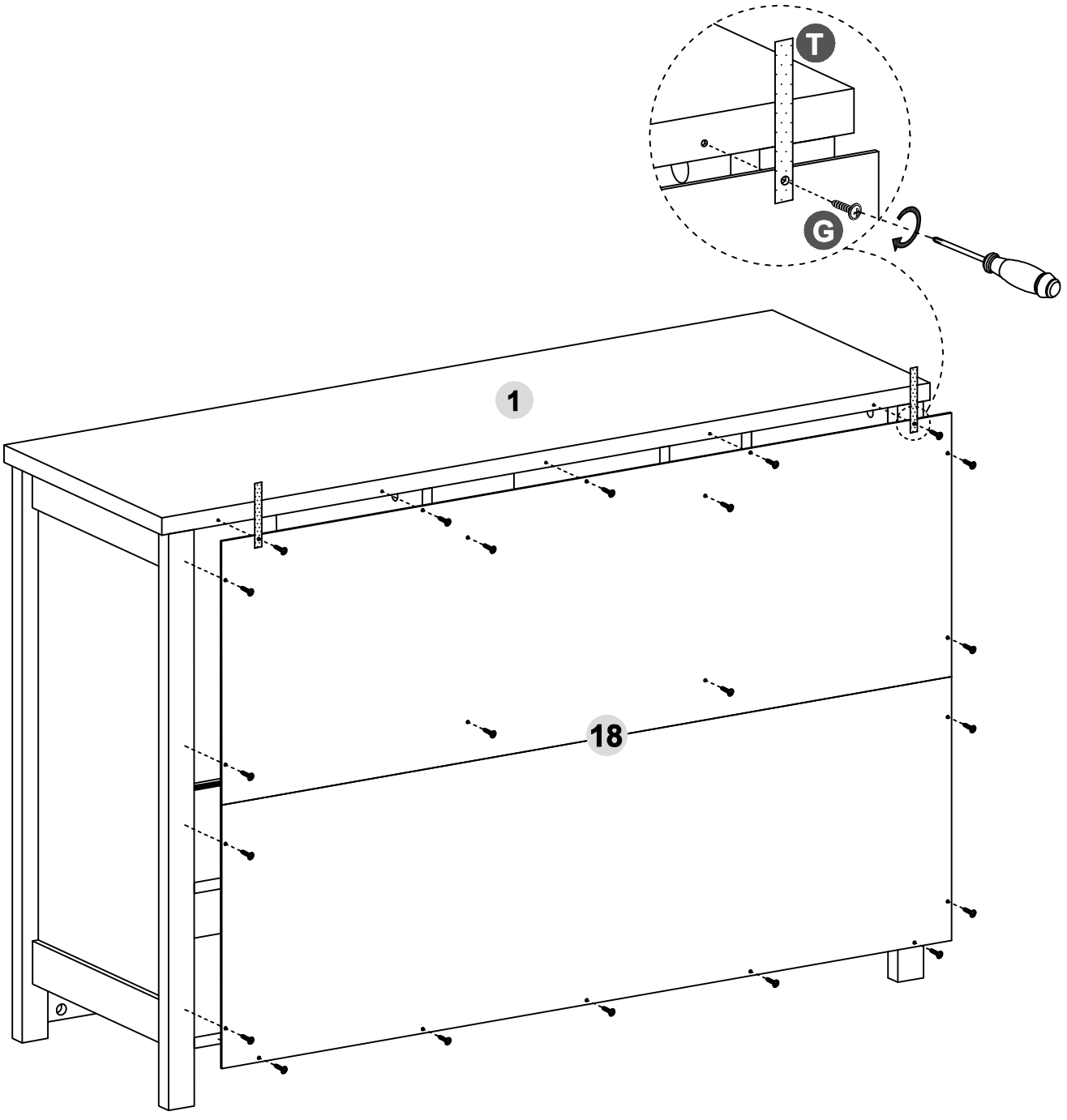

Warm Tips: For installing the back panel easier, we should lay down the dresser body, let the front face the ground and the back should be up, then ready to assemble the back panel (18). We suggest use a power drill to install the back panel.

STEP 16

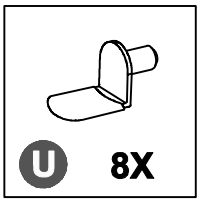

- Insert (U) to (2)&(3)&(8)&(9) as below shown
- Put the adjustable shelves (13) above assembled (U).

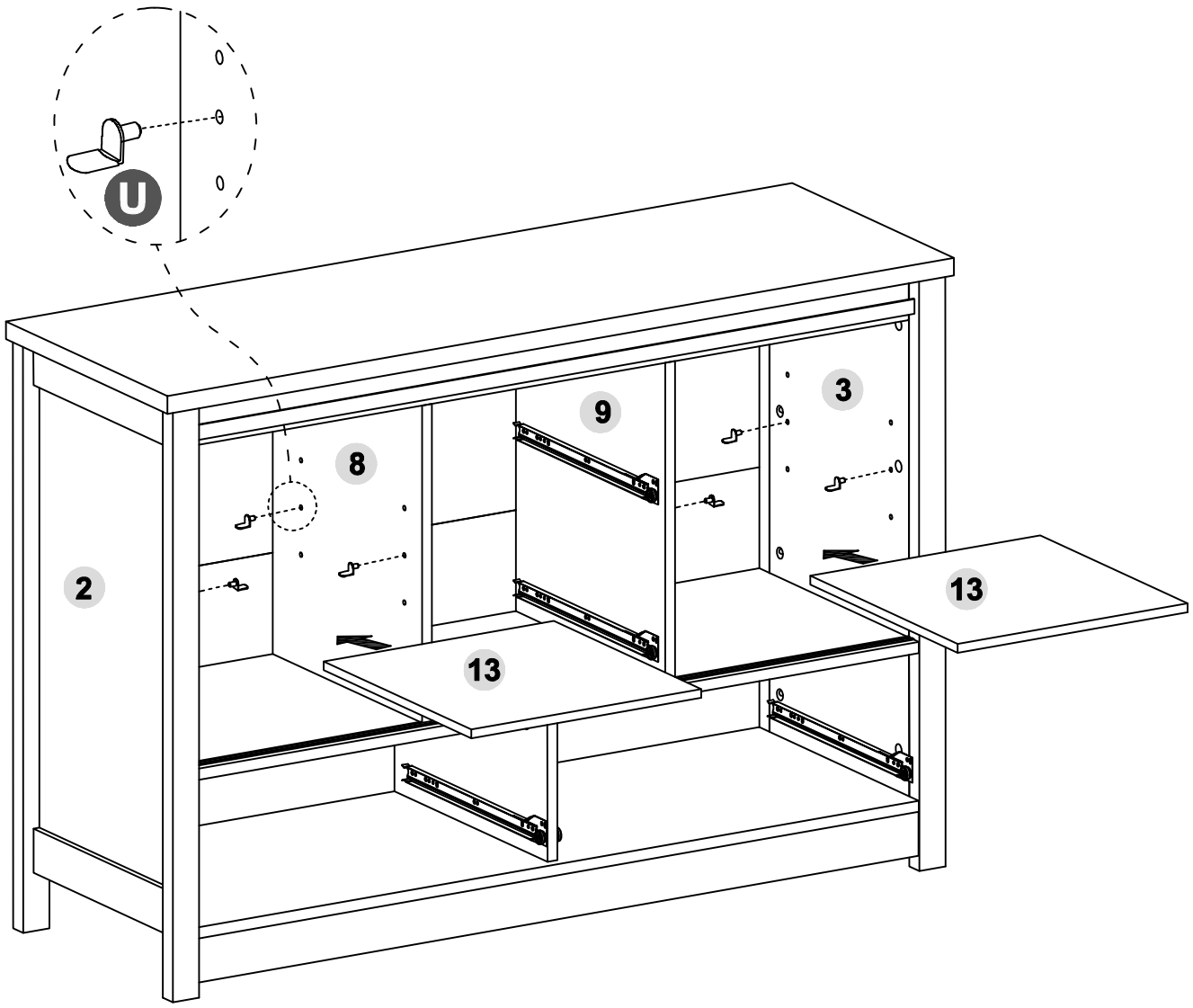

STEP 17

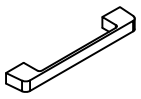 I 2X	 K 4X	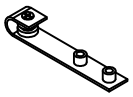 N 4X	 O 4X	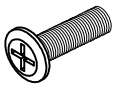 P 8X	 R 8X

- Start to install the sliding doors
- Screw (P) to lock (N), and Screw (R) to lock (O), and Screw (K) to lock (I) to the (19)&(20) as below shown

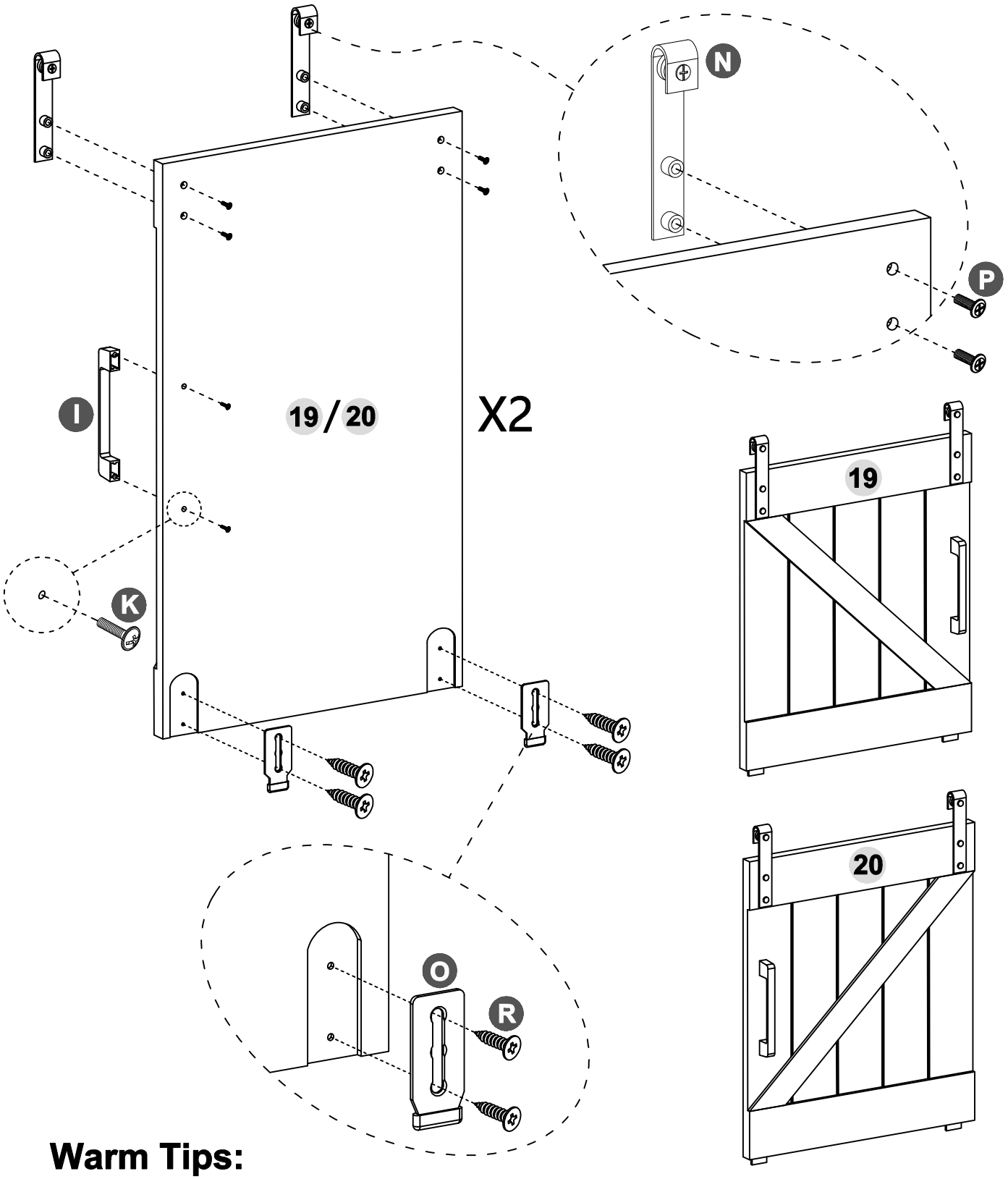

Warm Tips:

The screws are installed from the back of the board (19)&(20)

STEP 18

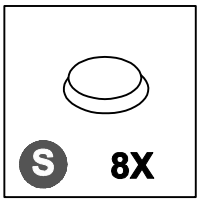

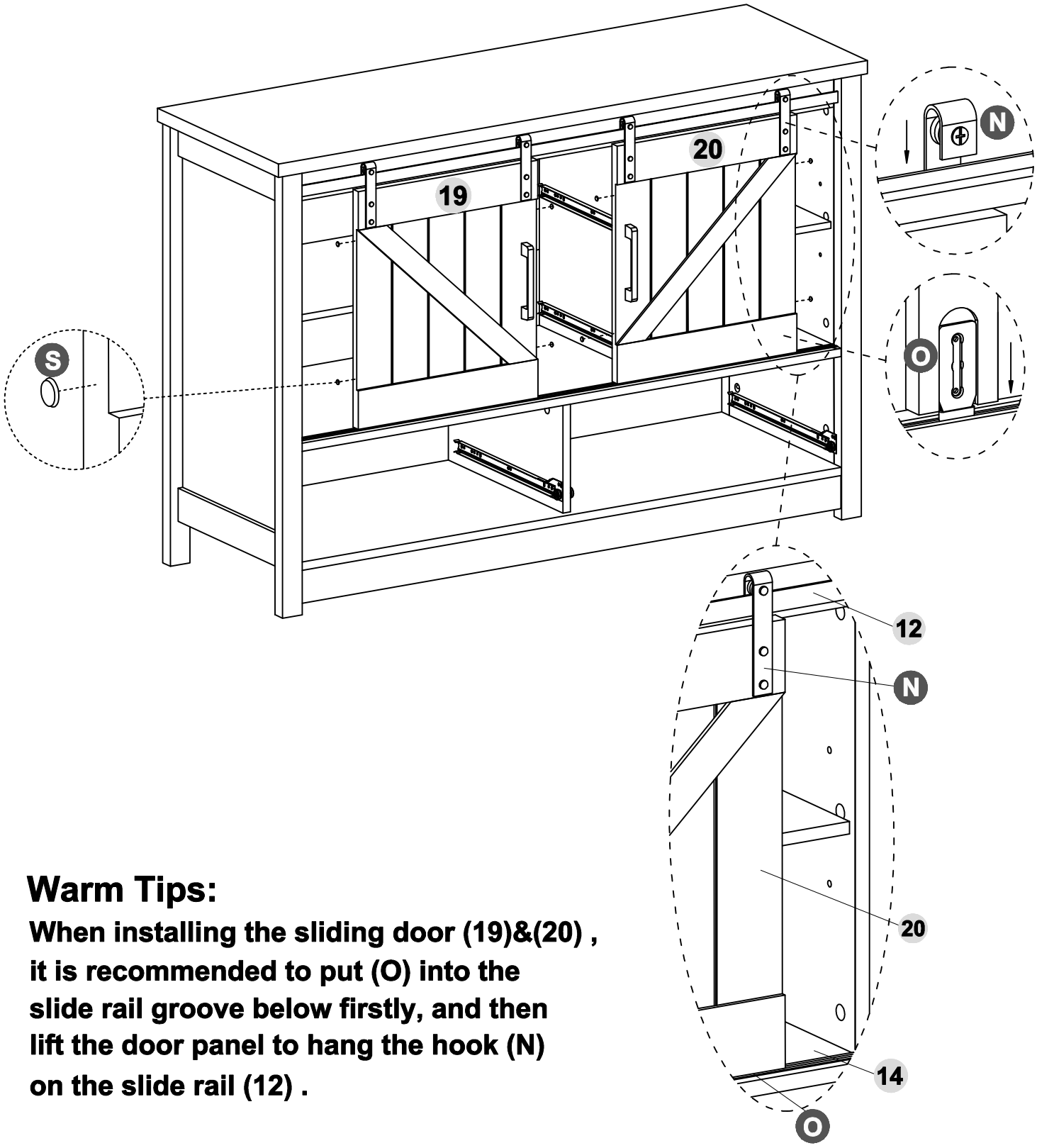

Warm Tips:

When installing the sliding door (19)&(20) , it is recommended to put (O) into the slide rail groove below firstly, and then lift the door panel to hang the hook (N) on the slide rail (12) .

STEP 19

- Screw (A)&(D) to (21) as below shown
- Attach (24)&(25) to (21) as below shown
- Screw (B) to lock the (24)&(25) as below shown

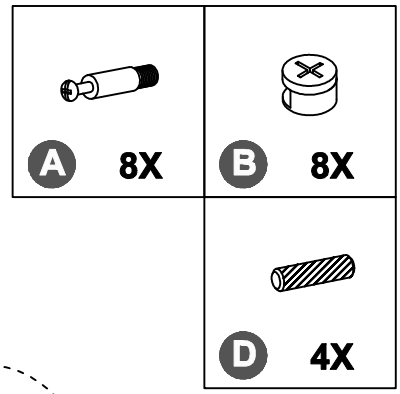

Step 1 :

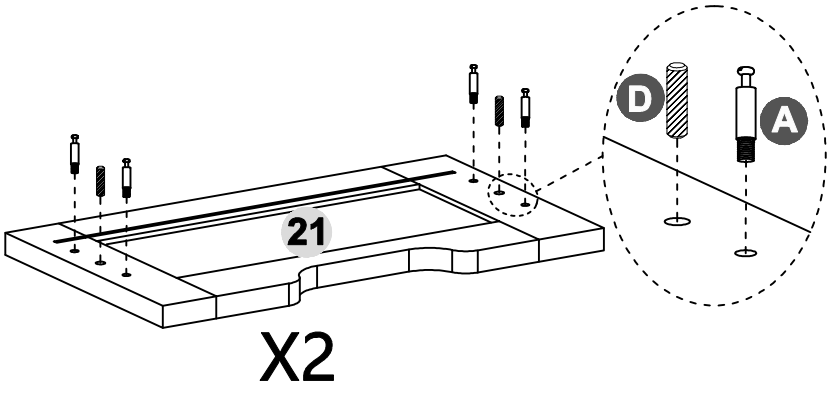

X2

The long groove is used to install the bottom plate, make sure to take note of installing the grooves of these boards on the same side.

Step 2 :

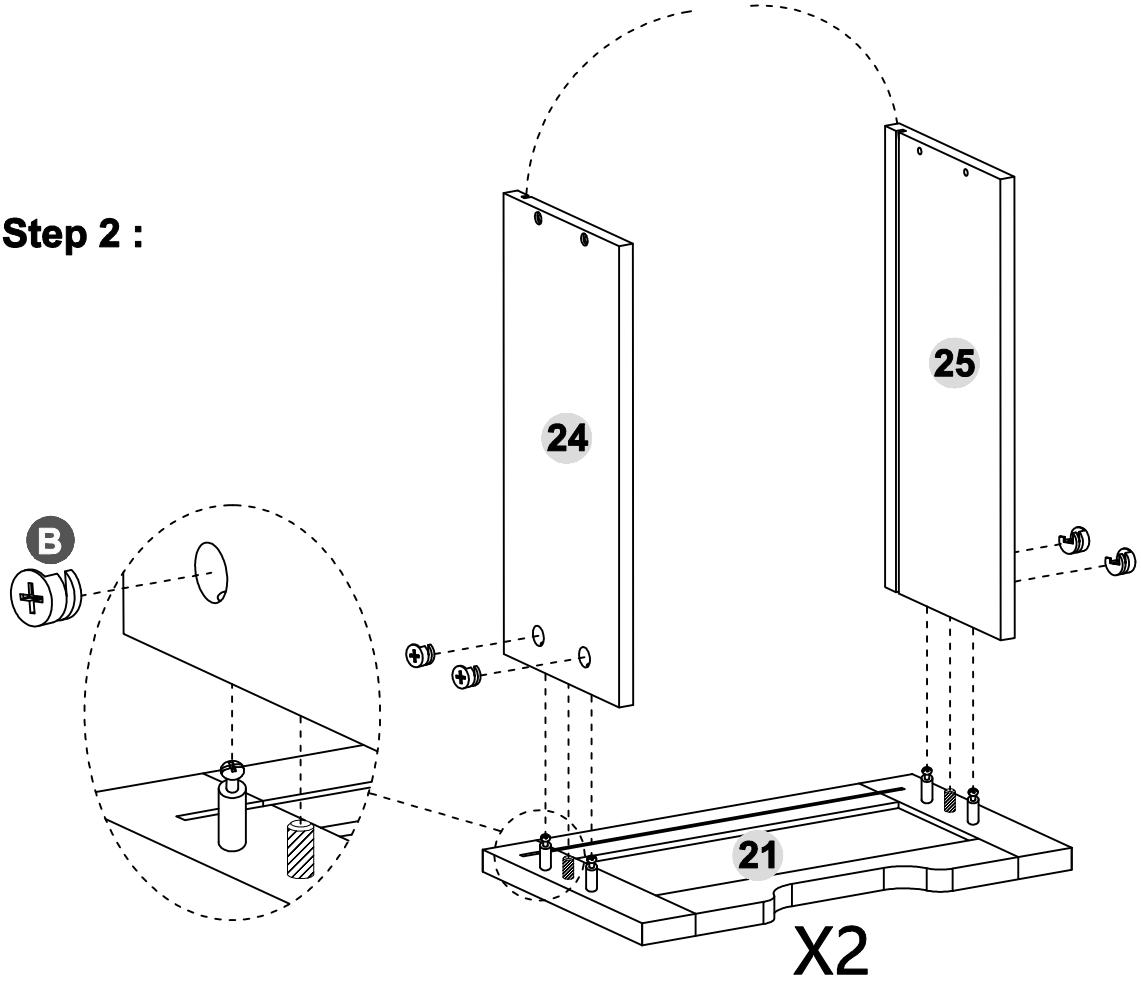

X2

STEP 20

- Attach (26)&(27) to (24)&(25) as below shown
- Screw (E) to attach (24)&(25) to (26) as below shown

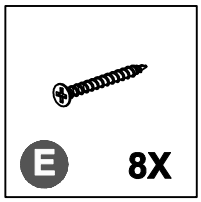

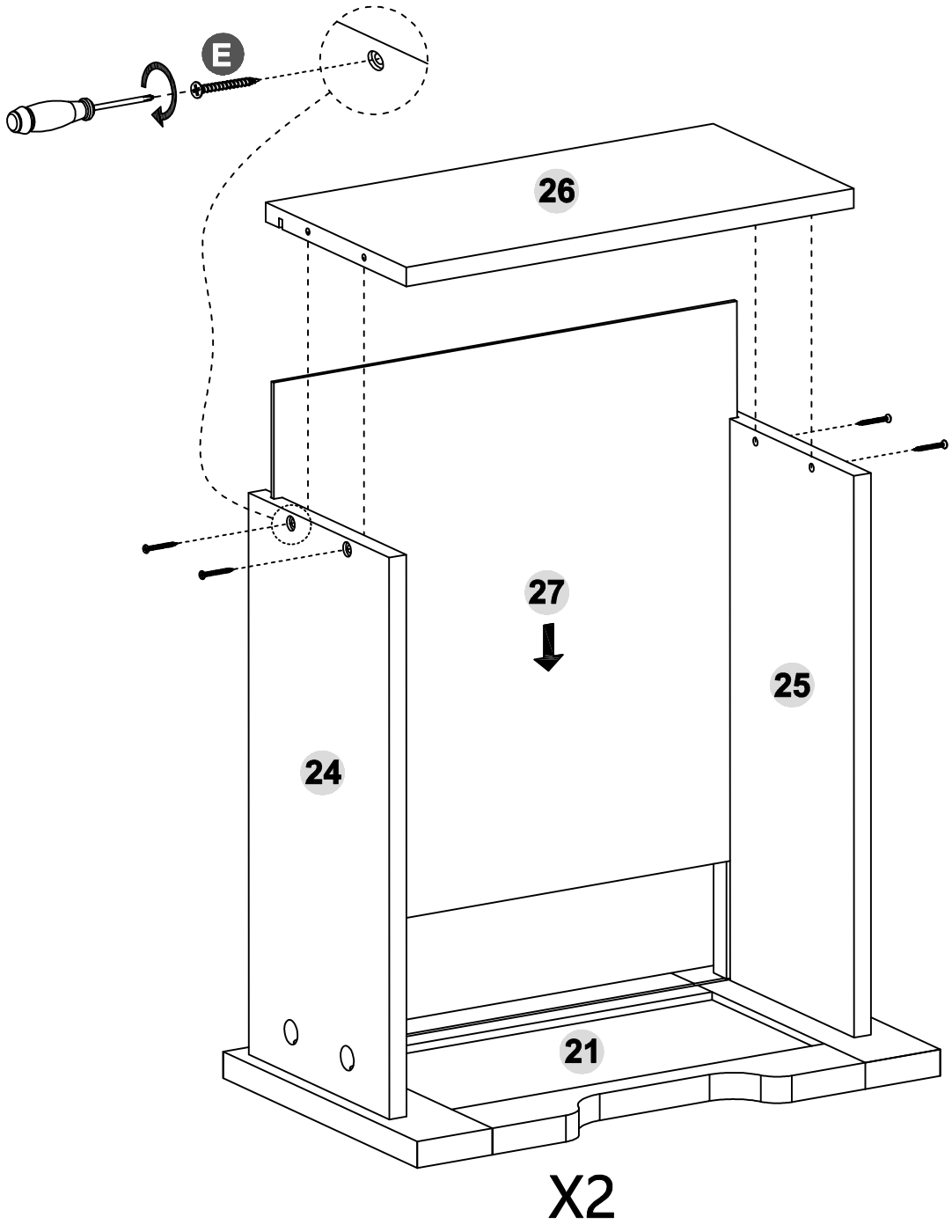

STEP 21

- Screw (A)&(D) to (22)&(23) as below shown
- Attach (24)&(25)&(30) to (22)&(23) as below shown
- Screw (B) to lock the (24)&(25)&(30) as below shown

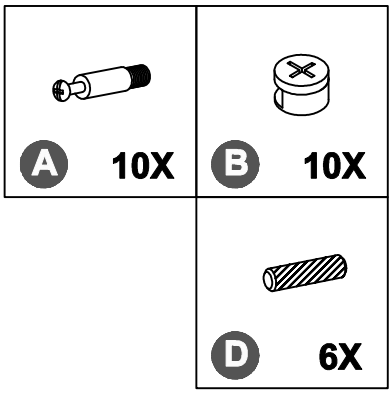

Step 1 :

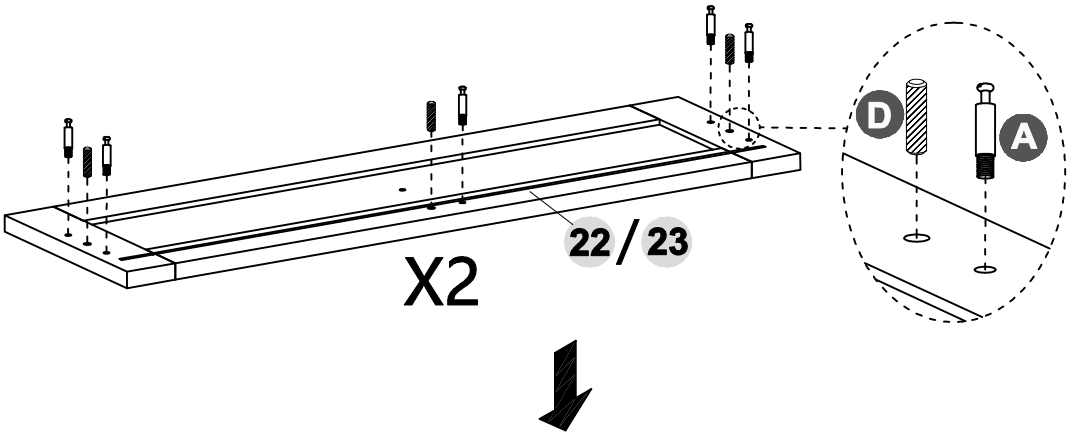

The long groove is used to install the bottom plate, make sure to take note of installing the grooves of these boards on the same side.

Step 2 :

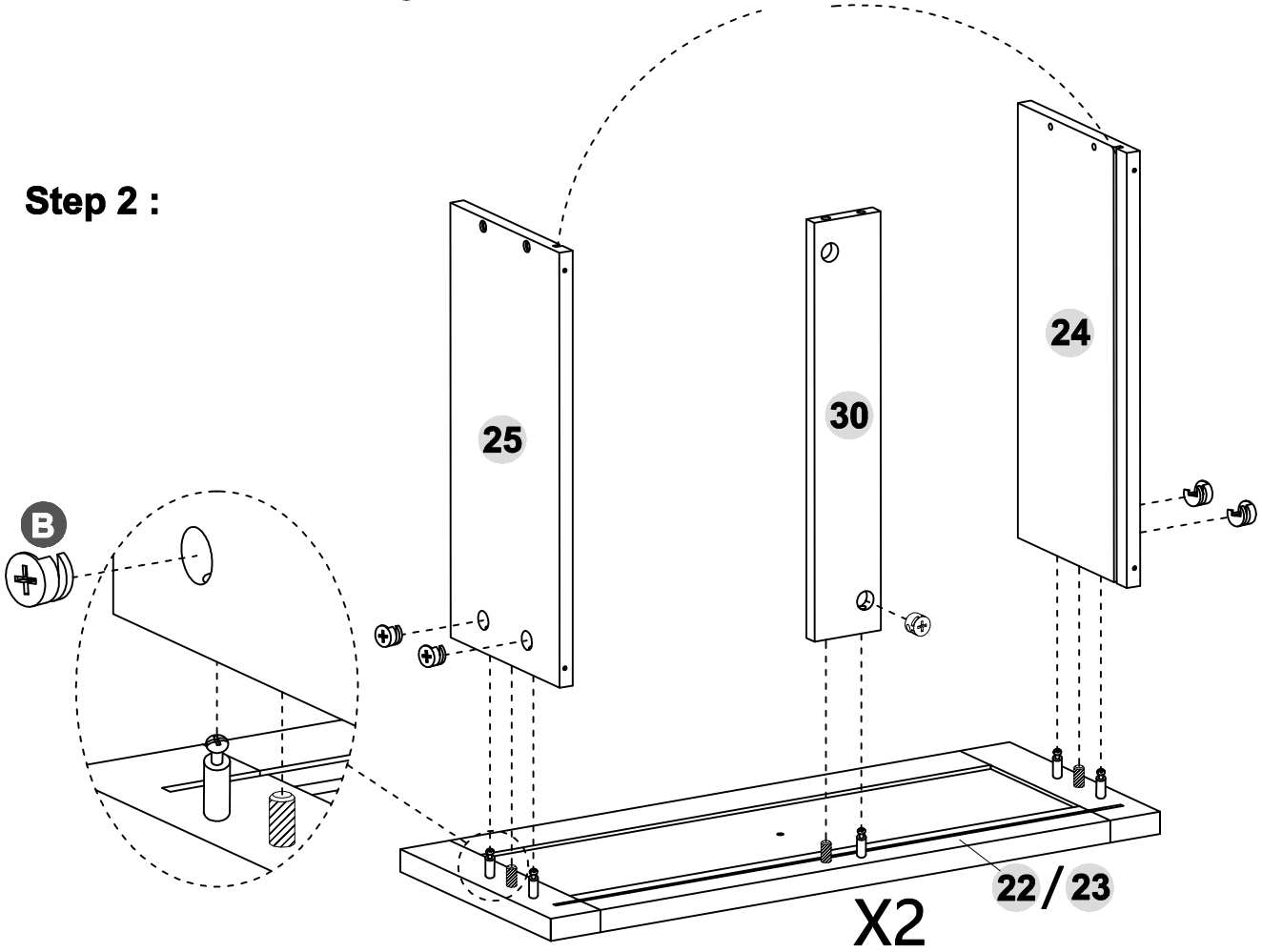

STEP 22

A	B	D	E
2X	2X	2X	8X

- Screw (A) to (28) as below shown
- Screw (D) to (30) as below shown
- Attach (28)&(29) to (24)&(25) as below shown
- Screw (E) to attach (24)&(25) to (28) as below shown
- Screw (B) to attach (30) to (28) as below shown

Step 1 :

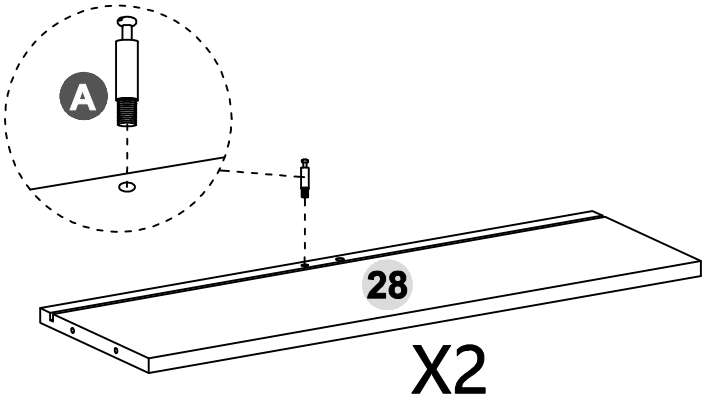

Step 2 :

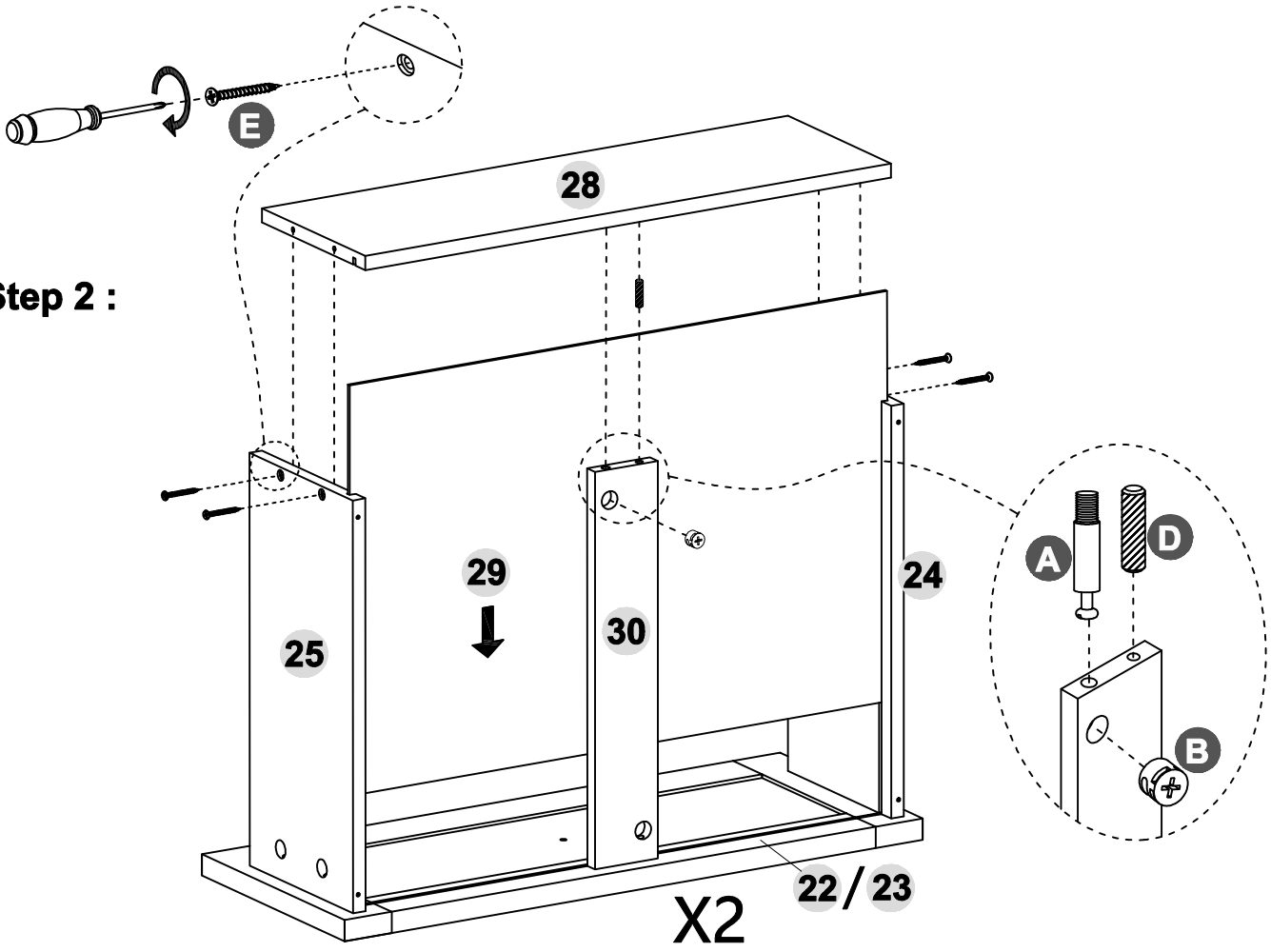

STEP 23

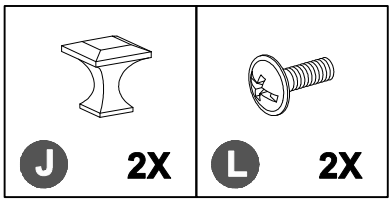

- Screw (L)&(J) to (22)&(23) as below shown

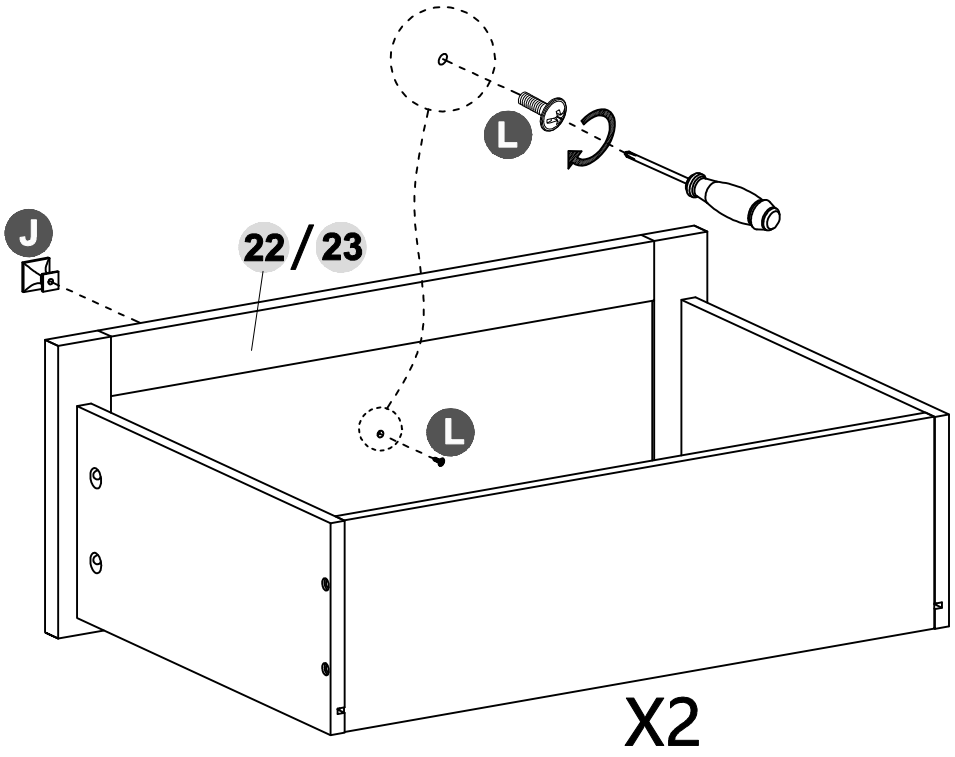

STEP 24

- Install the drawer slides (H) on the drawer side panels (24)&(25) as below shown

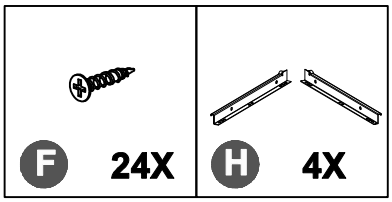

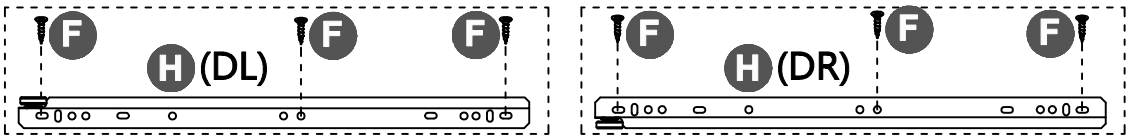

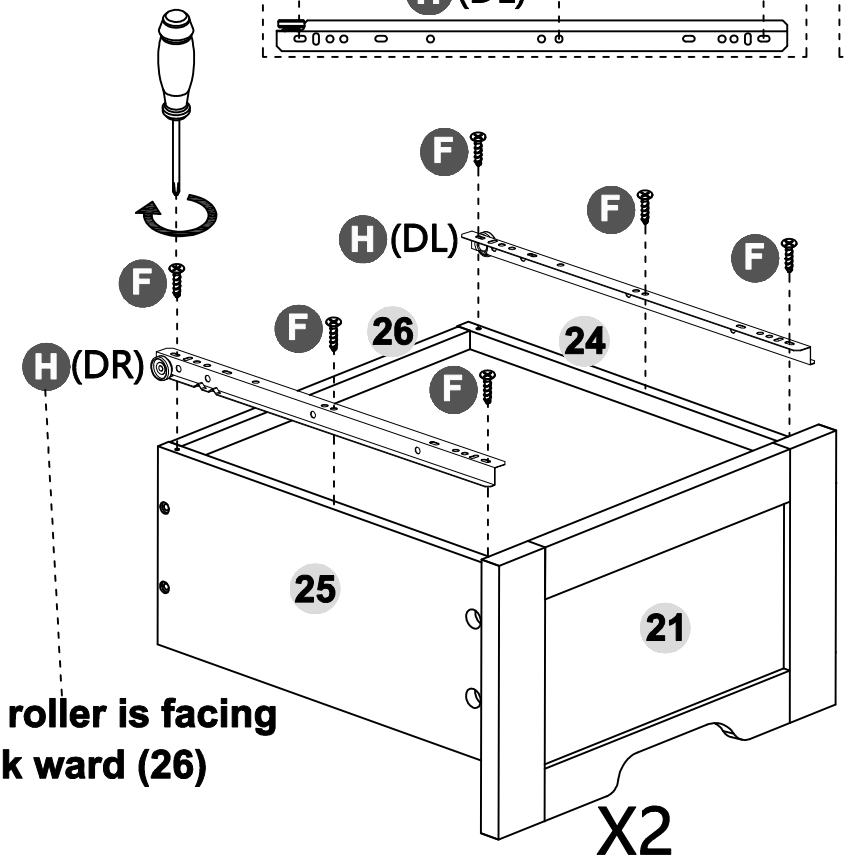

The roller is facing back ward (26)

X2

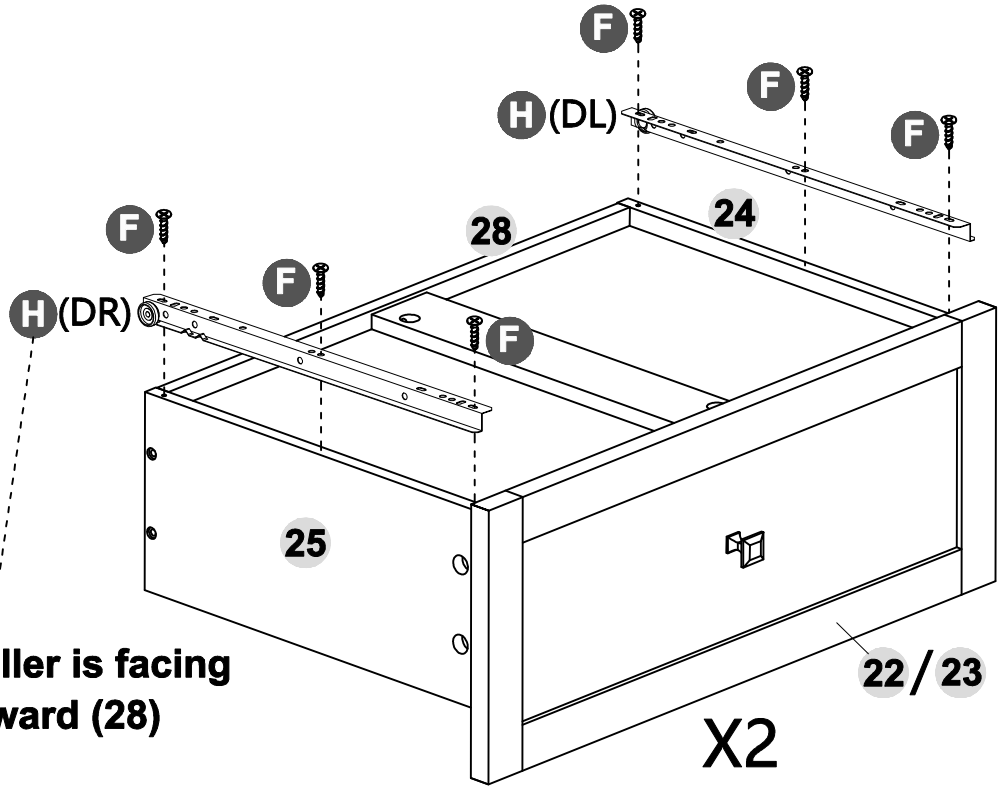

The roller is facing back ward (28)

X2

Repeat the previous step to install the remaining drawers

STEP 25

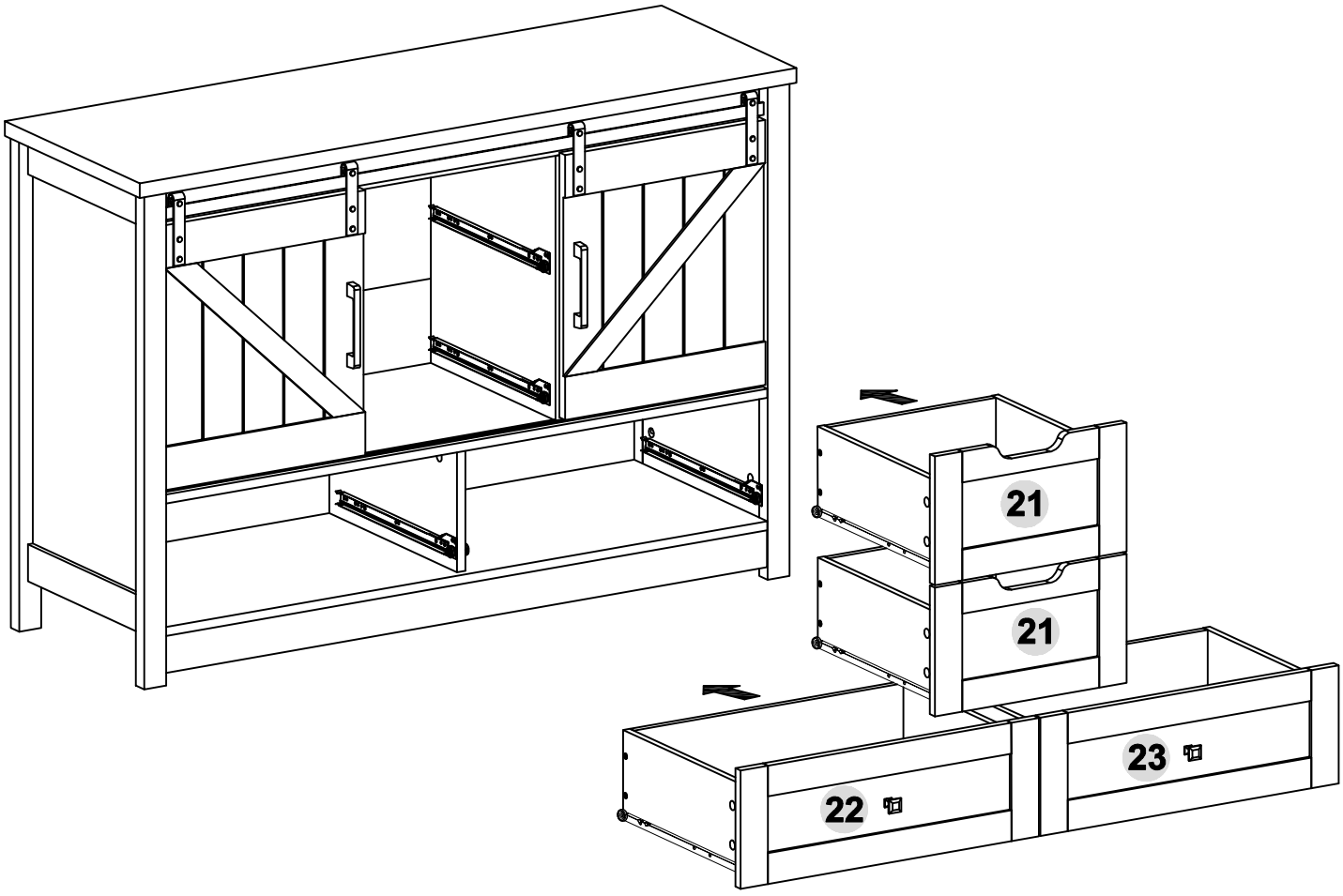

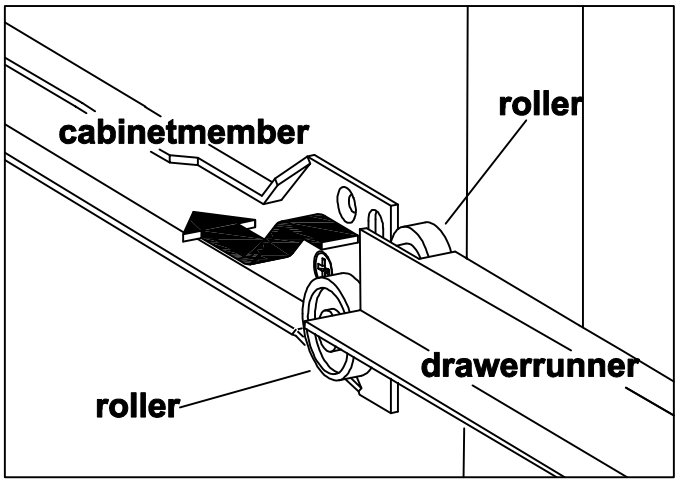

When you put the drawer, please note that the drawer wheels on top of the wheels of the slide, then check whether the drawer is smooth when pulled out. Otherwise, the drawer will not be aligned with other drawers.

STEP 26

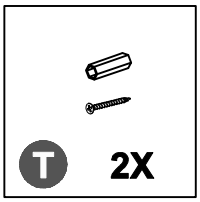

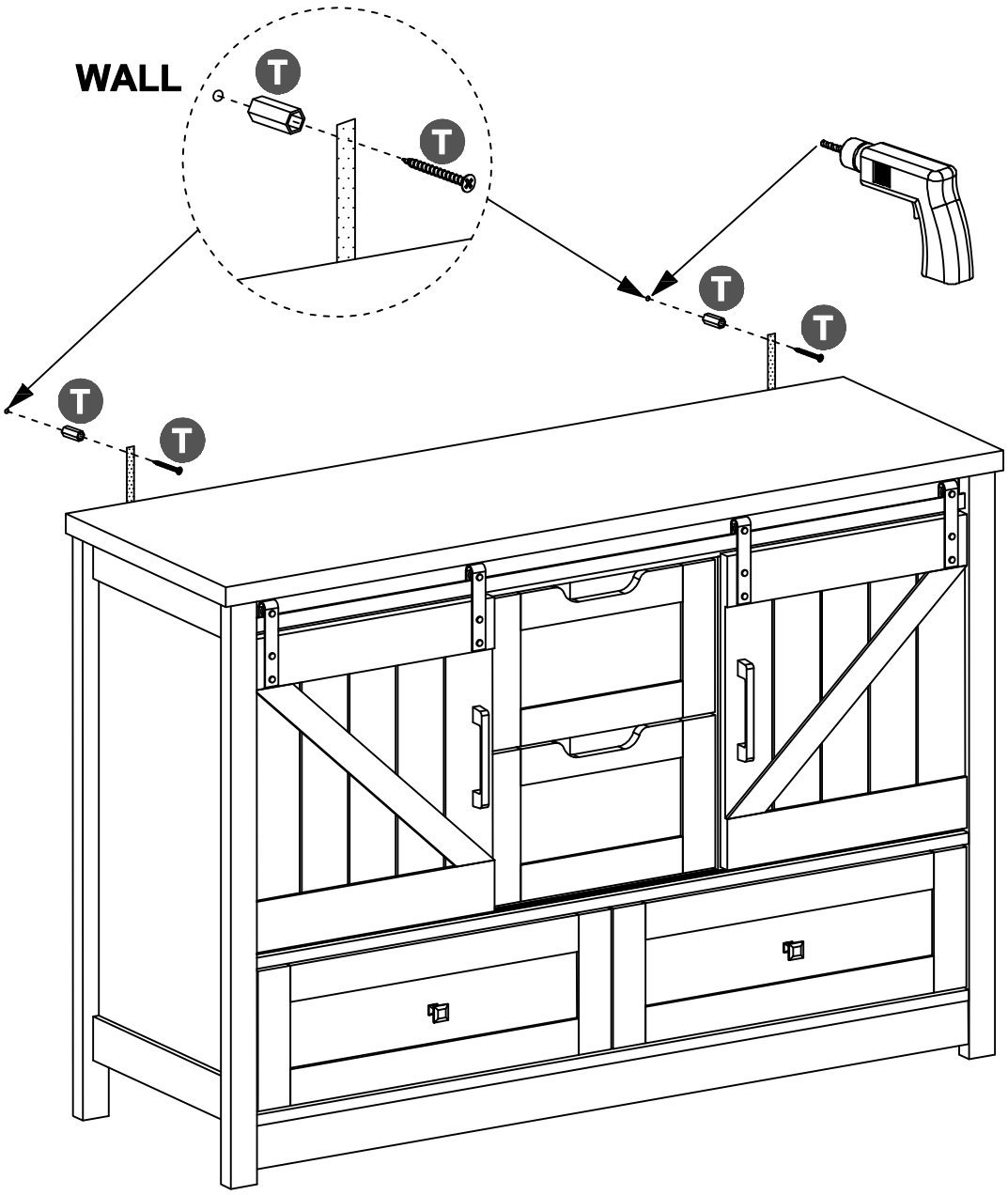

Tools required (not included): screwdriver, stud finder, tape measure, pencil, power drill and 3/16" drill bit.

Now, follow the guide printed on the plastic bag containing the tipping restraint hardware to attach the tip-over restraints to the unit and the wall.

NOTE: The tipping restraint hardware included is for wooden stud wall construction. it must be attached to a wall stud. depending upon your wall construction, different anchor hardware maybe required. please contact your local hardware store for assistance. young children can be seriously injured by tipping furniture. you must install the tipping restraint hardware with the unit to prevent the unit from tipping, causing any accidents or damage. the tipping restraints are intended only as a deterrent, they are not a substitute for proper adult supervision. the tipping restraints are not earthquake restraints. if you wish to add the extra security of earthquake restraints, they must be purchased and installed separately.

STEP 27

Finally, you got a 4-drawer dresser!

