Murphy Bed

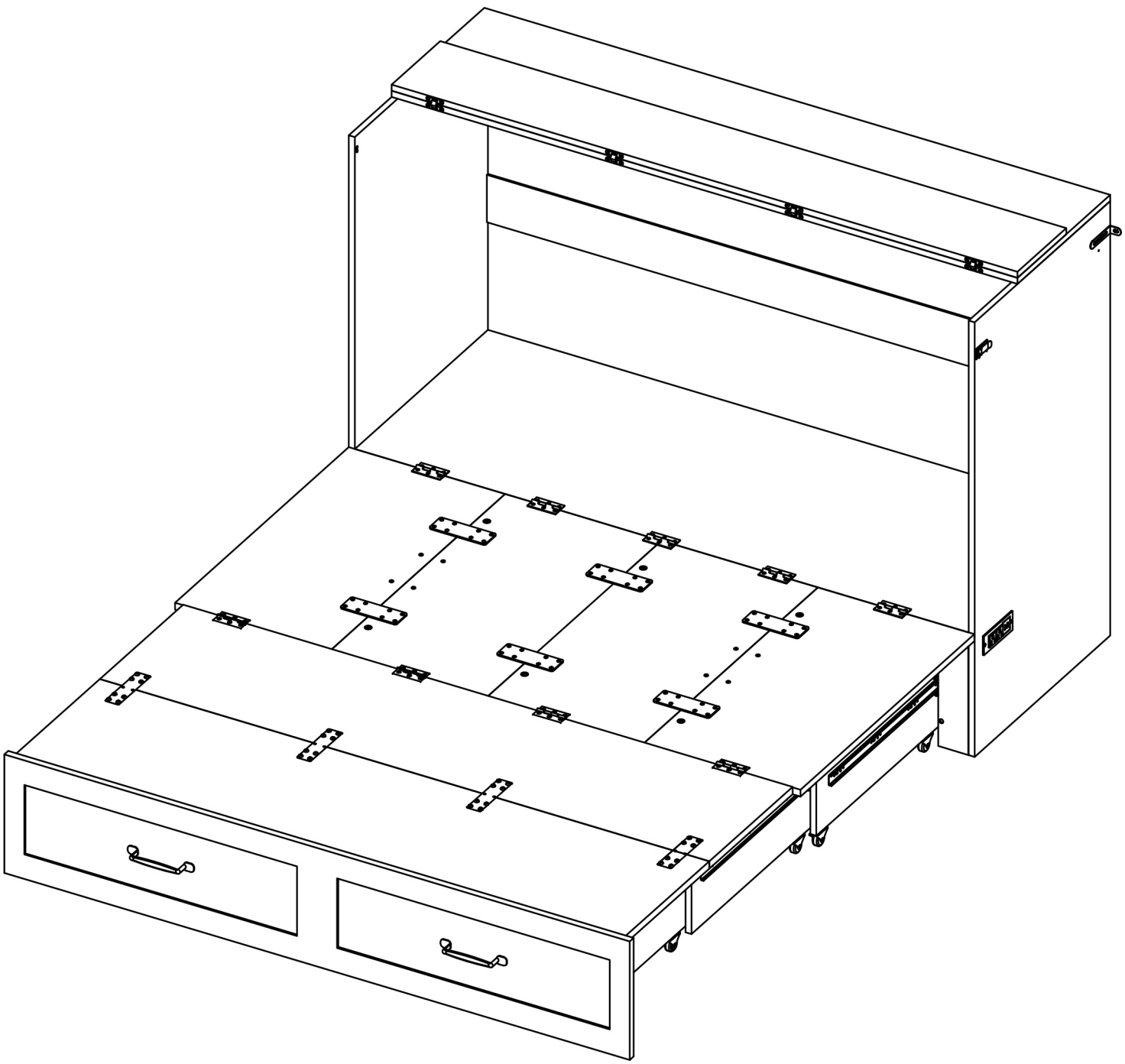

MF-Q01A/MF-Q01B/MF-Q01C
MF-Q02A/MF-Q02B/MF-Q02C

Note

The product is packed into separate parcels. Please make sure all parcels are received before assembly. To assemble, follow this instruction manual.

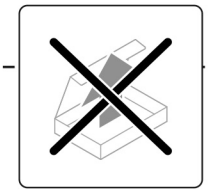

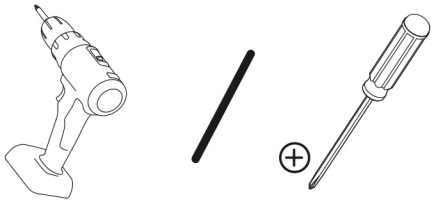

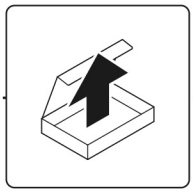

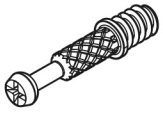

A x 54

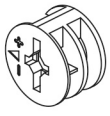

B x 54

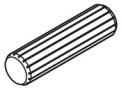

C x 10

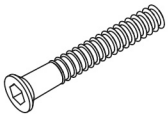

M6 x 38mm

D x 26



ST3.5 x 14mm

E x 96

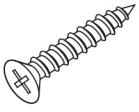

ST3 x 20mm

F x 16



ST3 x 14mm

G x 32



ST5 x 14mm

H x 96



I x 4

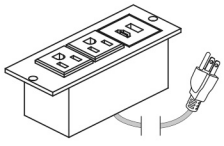

J x 1

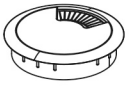

K x 1

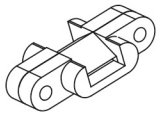

L x 4



M x 54



N x 14

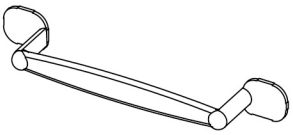

O x 6



P x 23

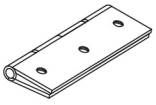

Q x 9

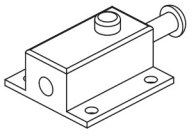

R x 2

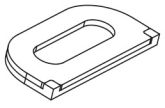

S x 2

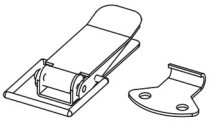

T x 2



U x 2

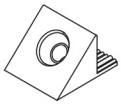

V x 12

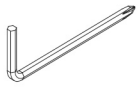

5/32'' (4mm)

W x 1

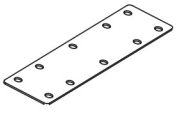

X x 12

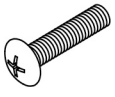

Y x 12

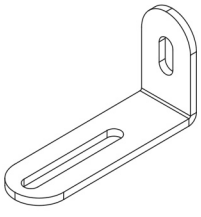

a x 2

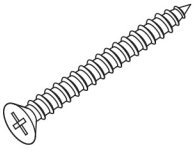

ST5 x 50mm

b x 2

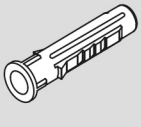

Ø8 x 36mm

c x 2

⚠ CAUTION!

These wall anchors are for concrete ONLY. DO NOT use them in drywall or wood studs.

Number labels may be attached to the surfaces or edges of the panels.

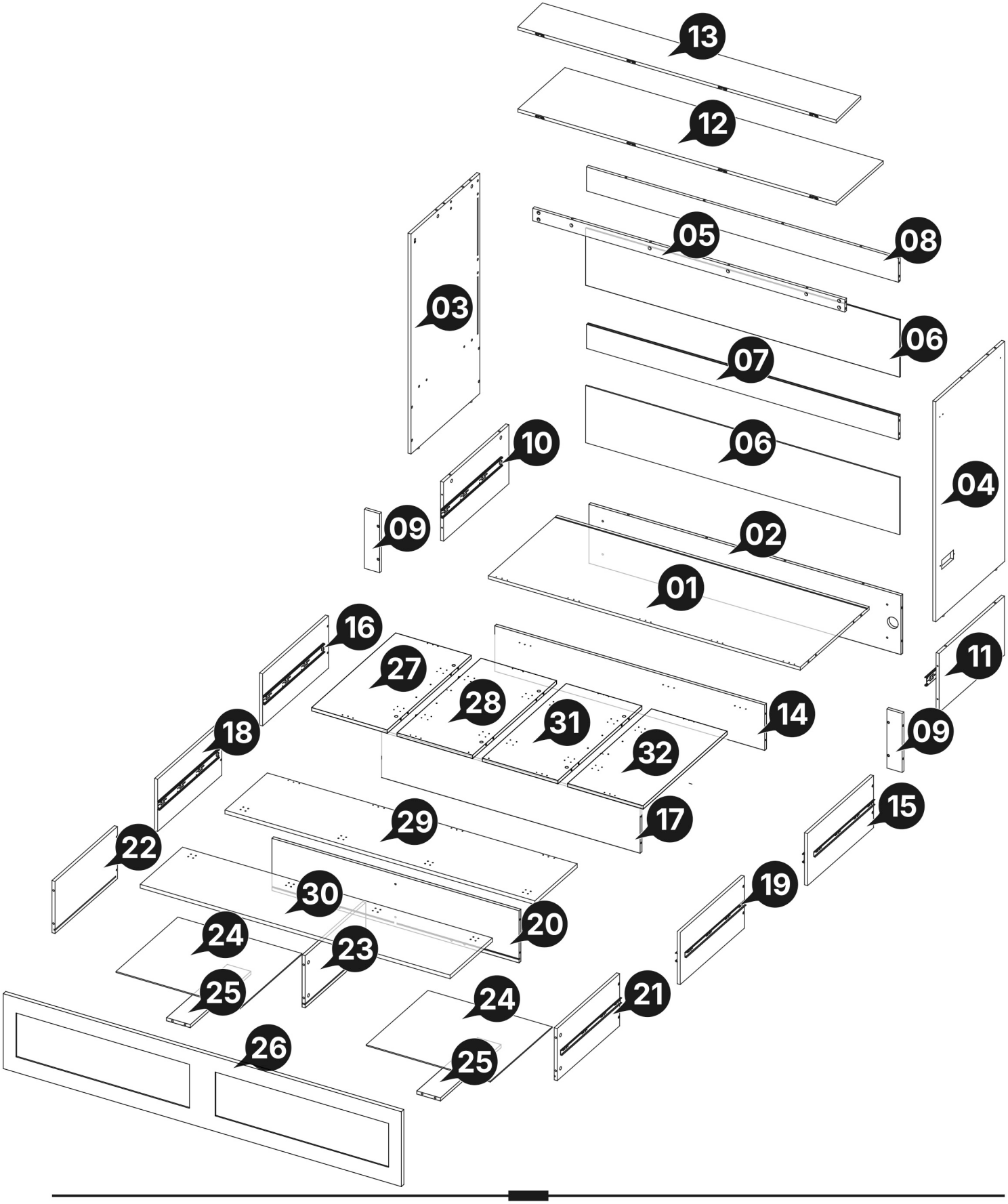

1 Assembling the Cabinet

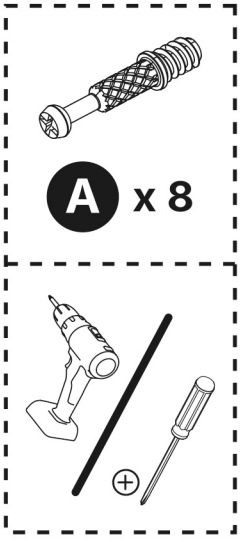

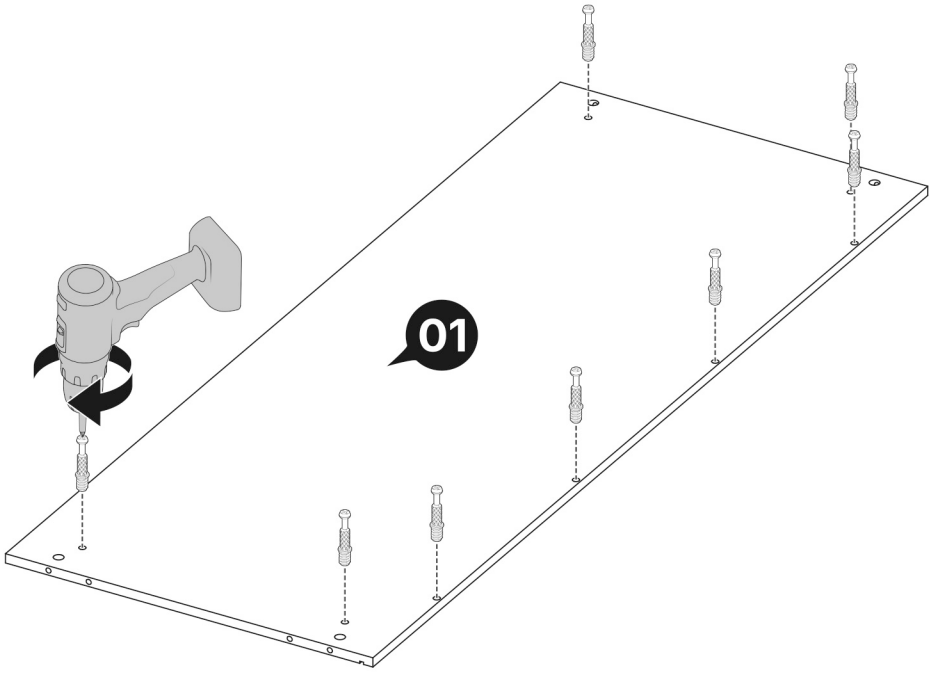

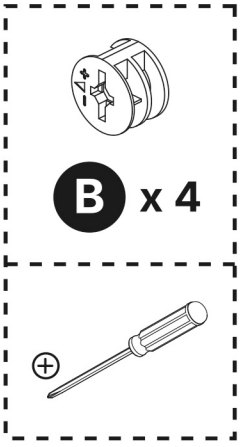

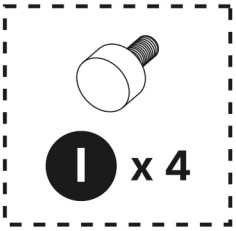

I x 4

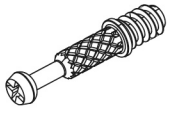

A x 24

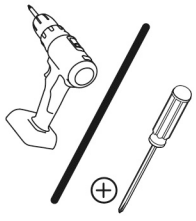

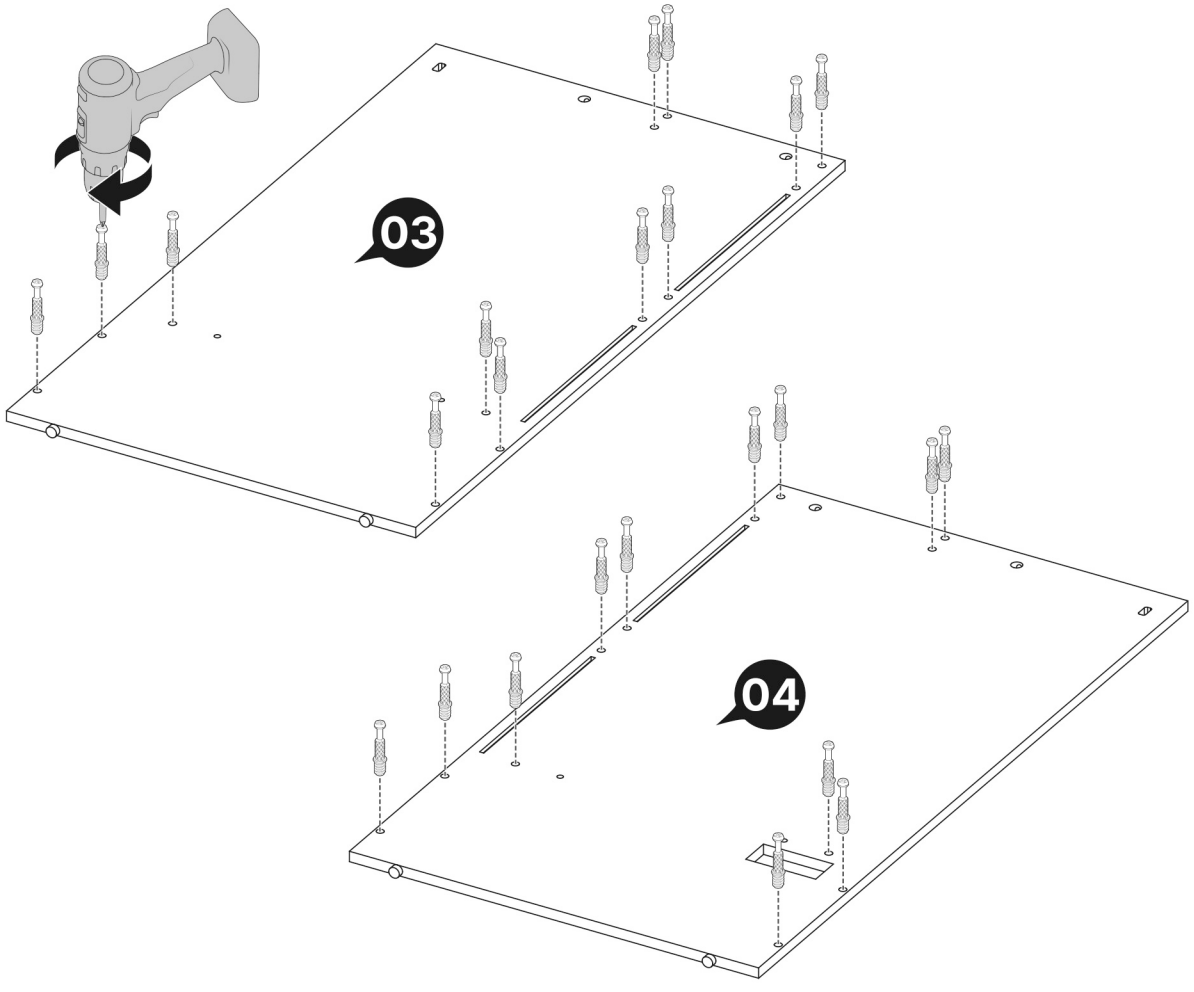

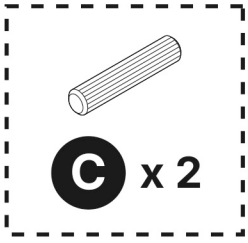
C x 2

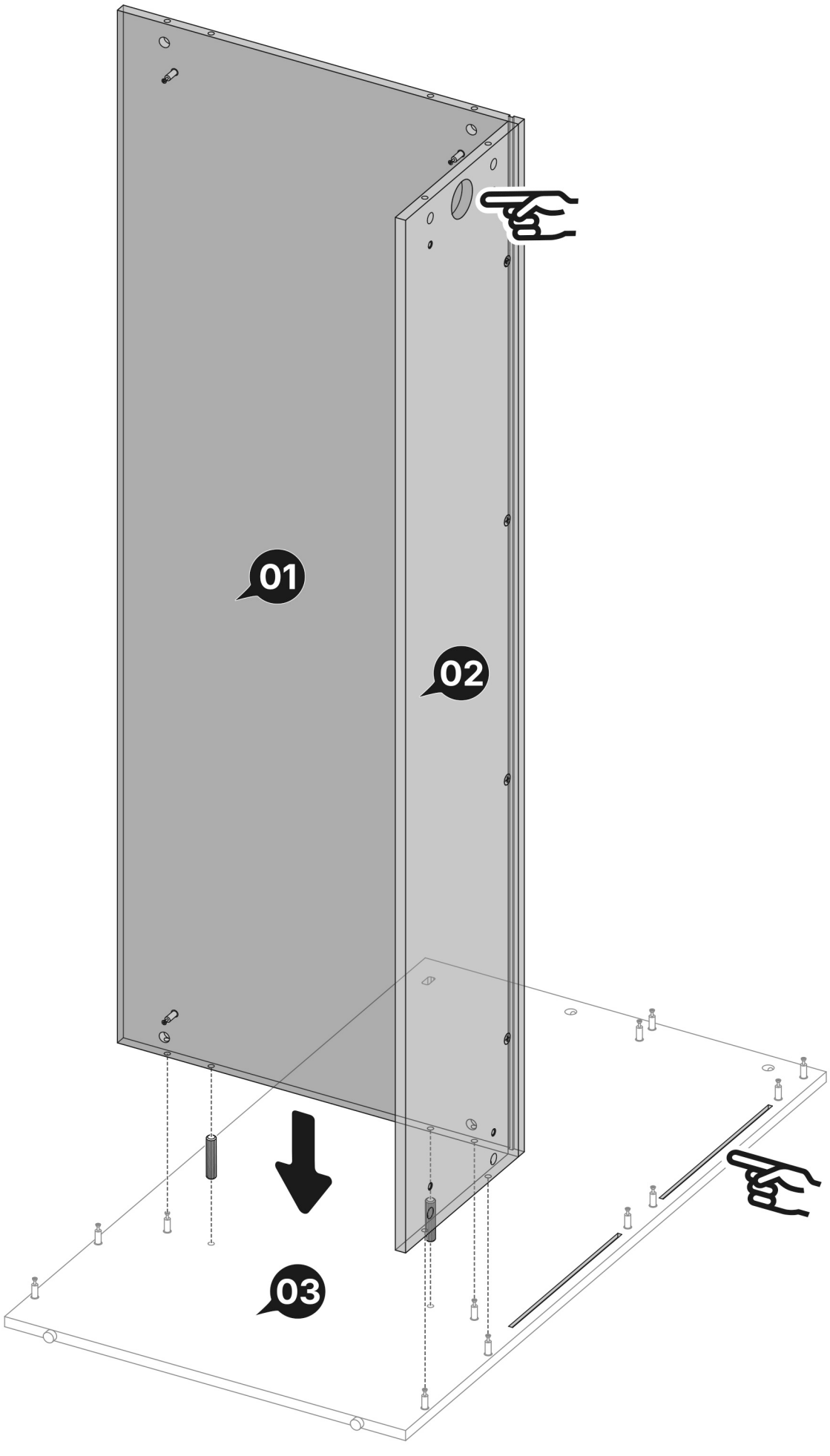
01
02
03

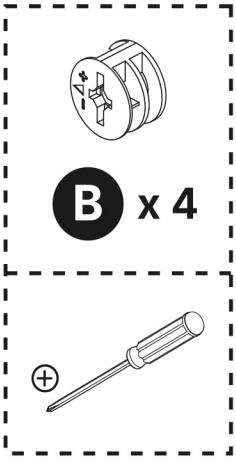
B x 4

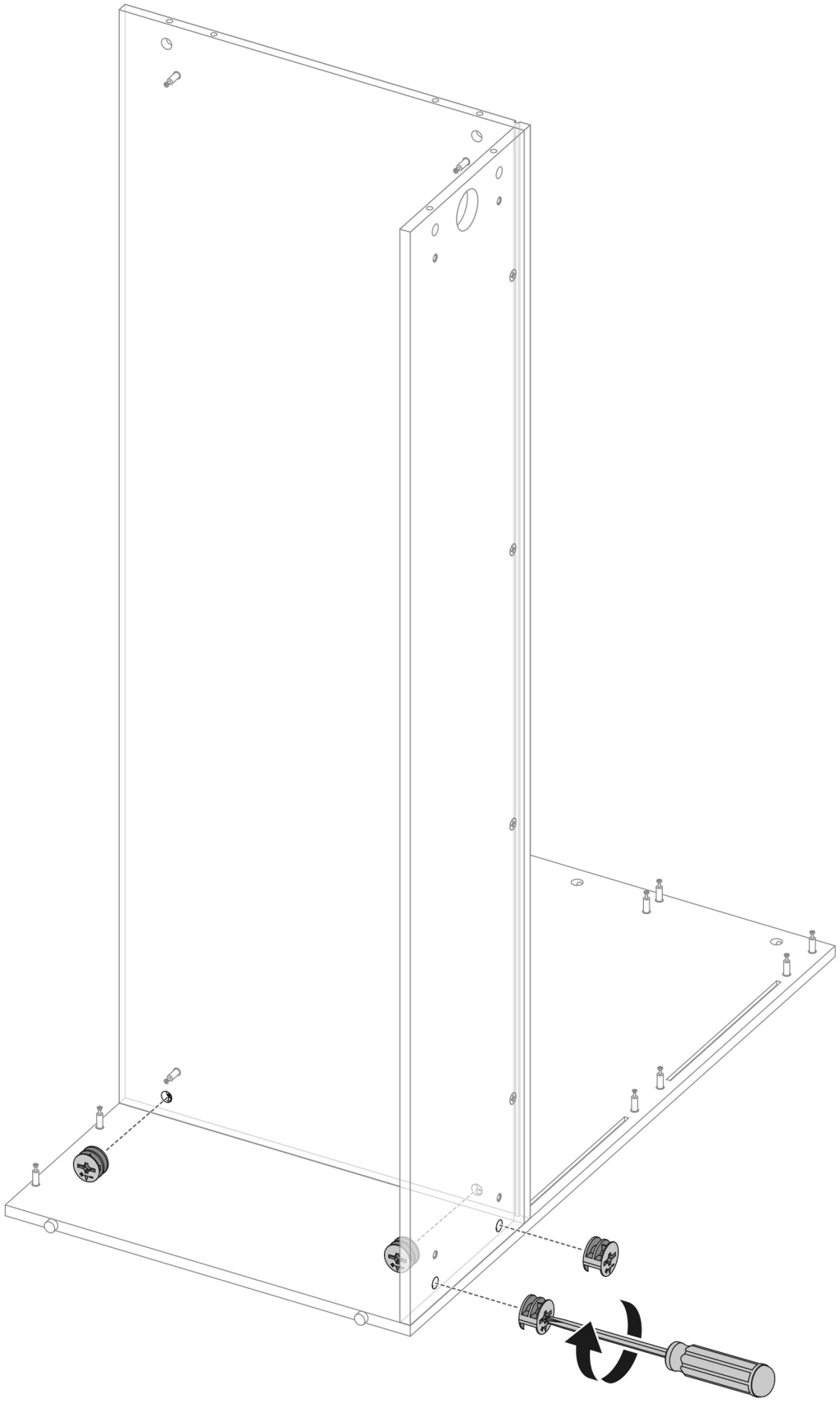

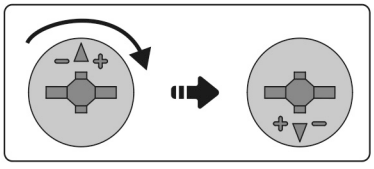

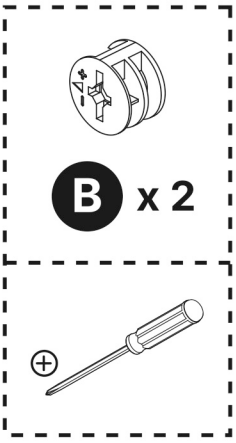
B x 2

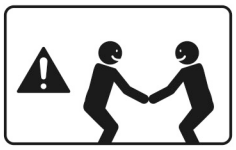

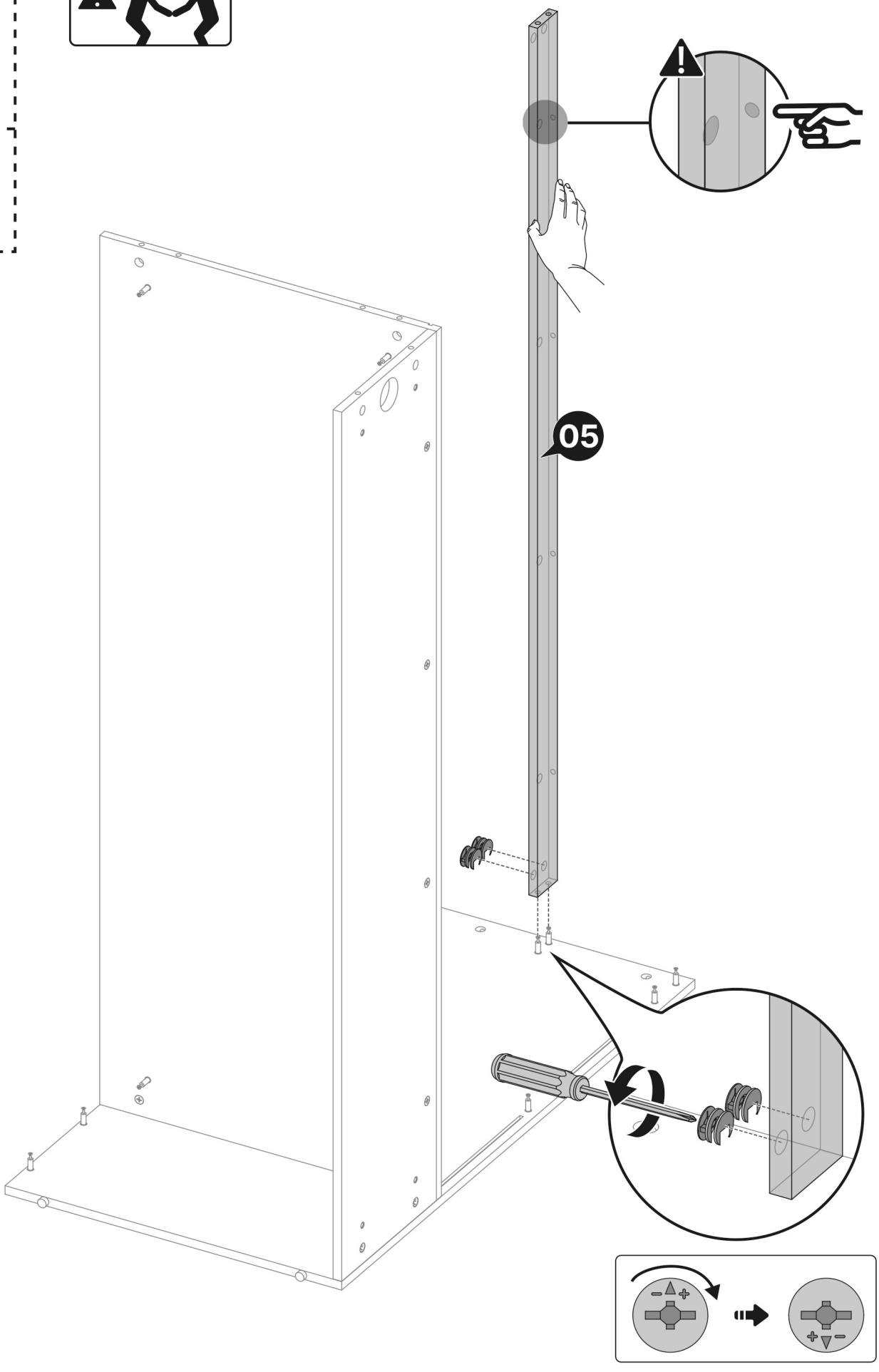
05

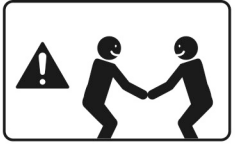

06

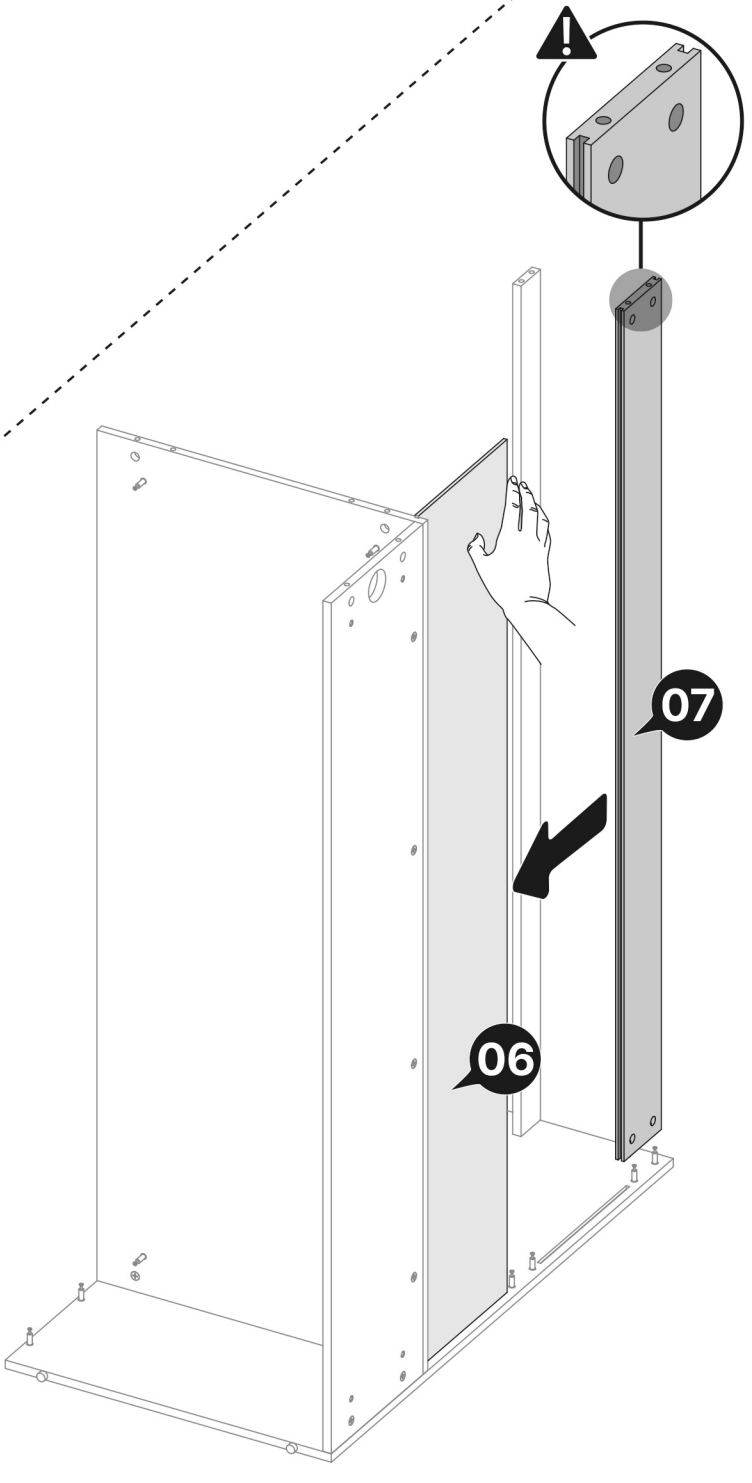
07
06

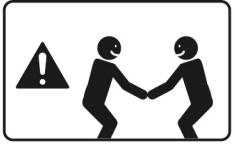

06
07
08
06

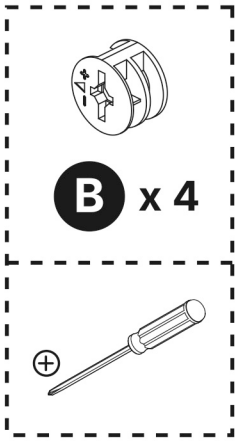
B x 4

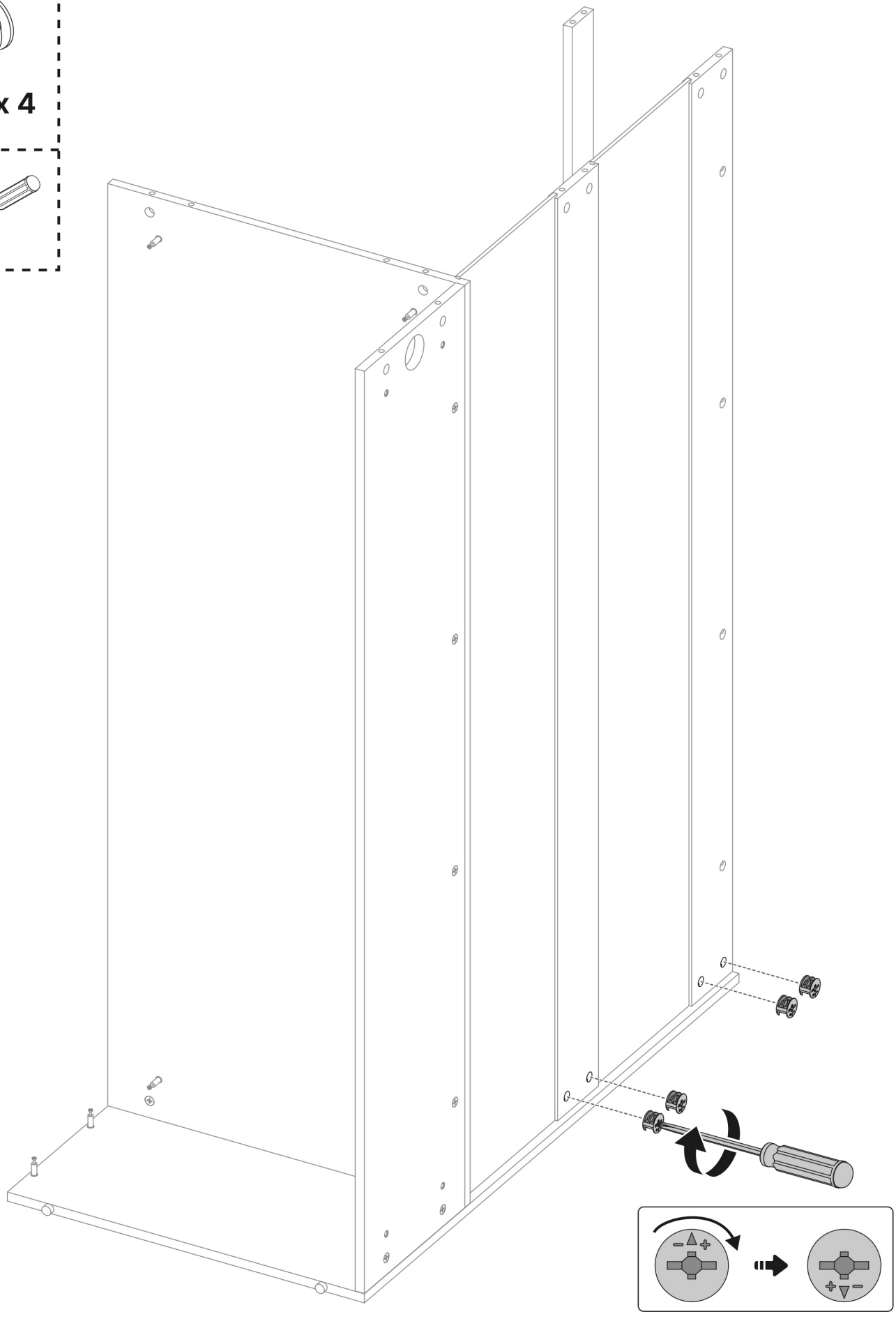

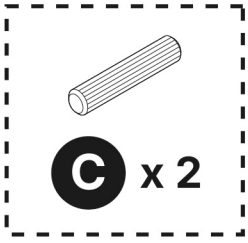
C x 2

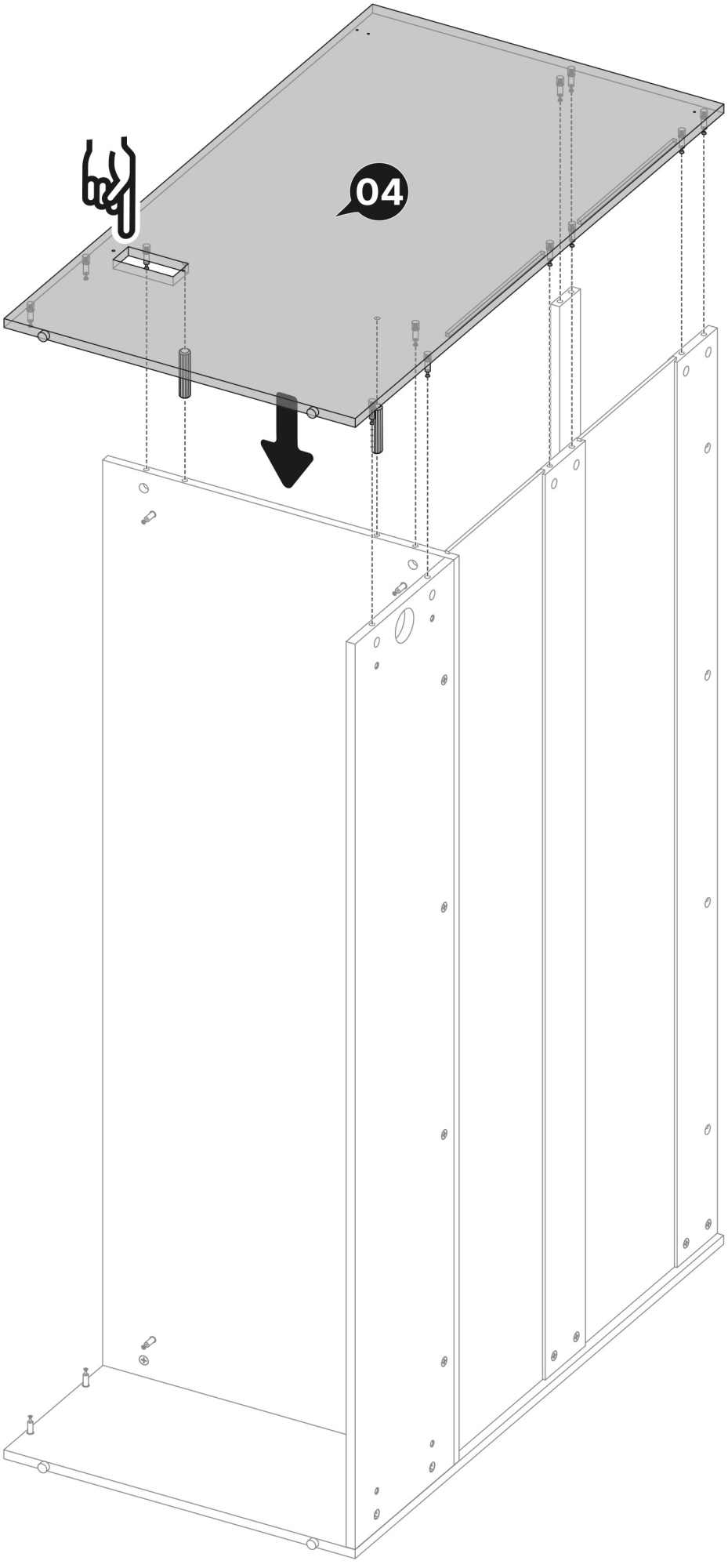
04

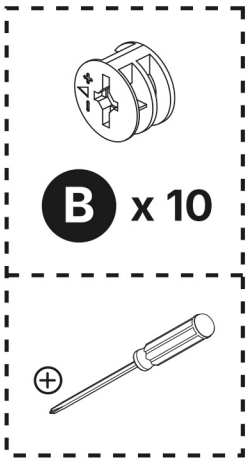
B x 10

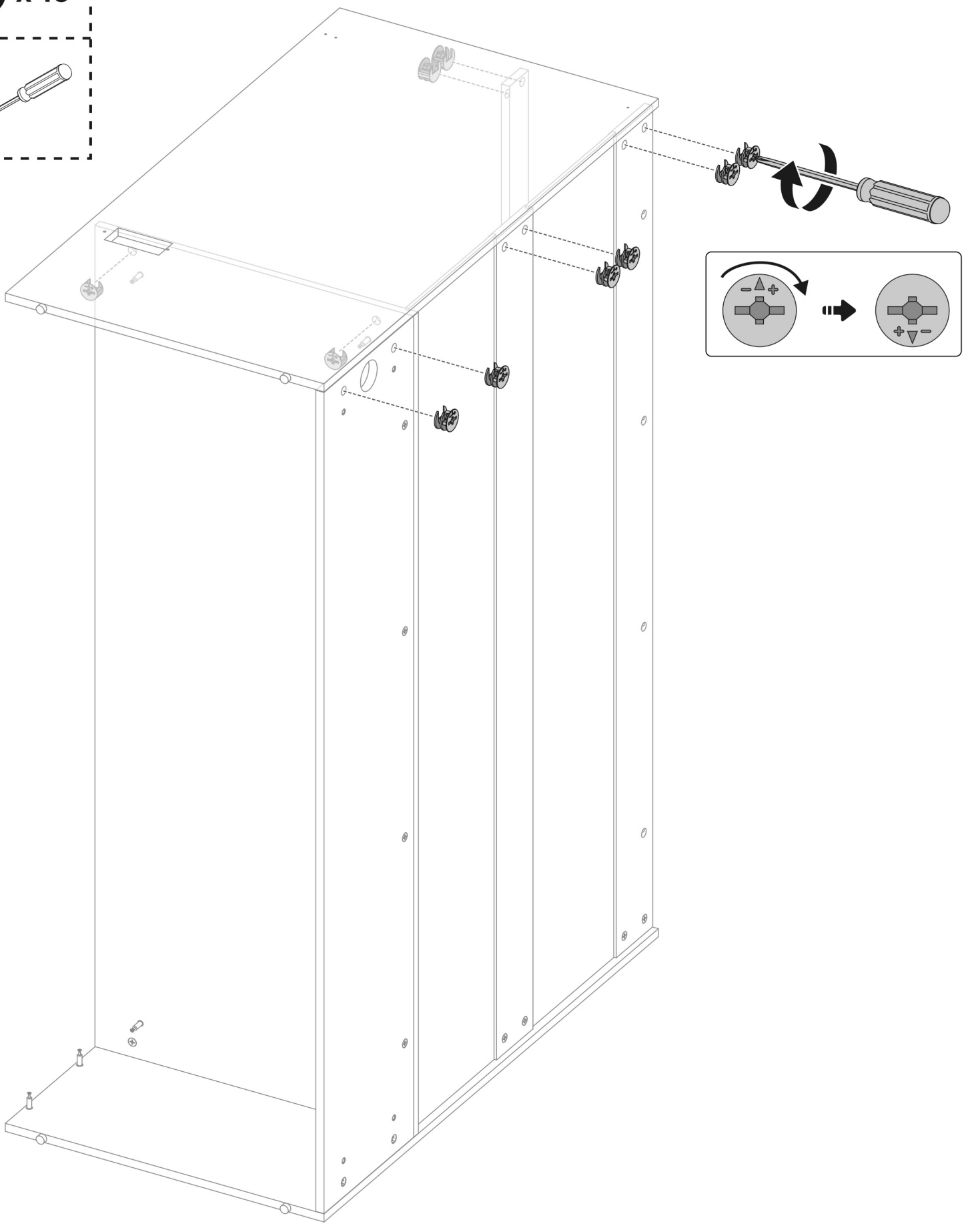

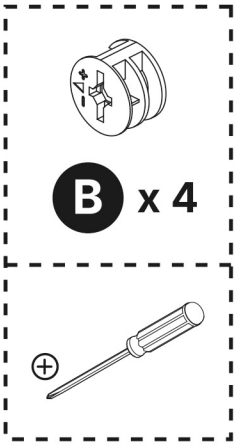
B x 4

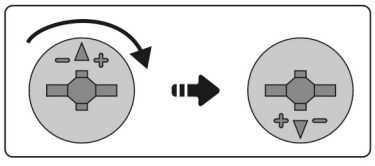

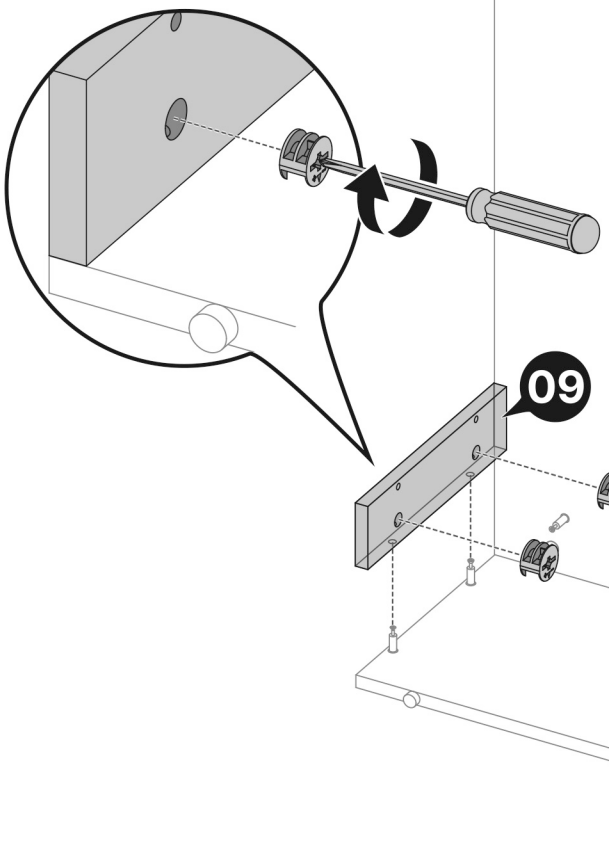
09
09

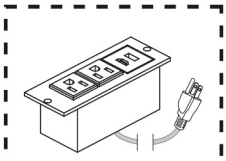

J x 1

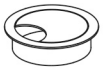

K x 1

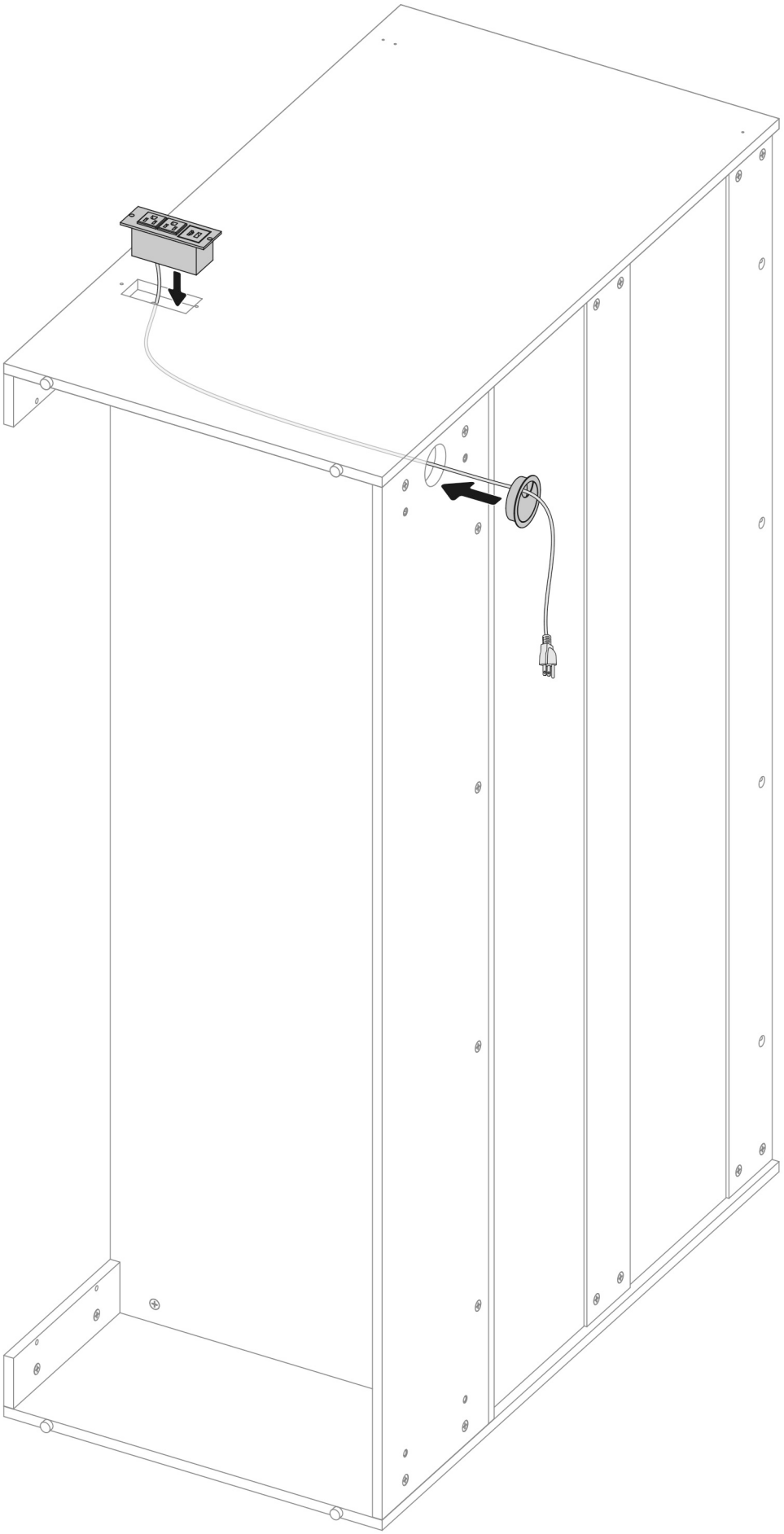

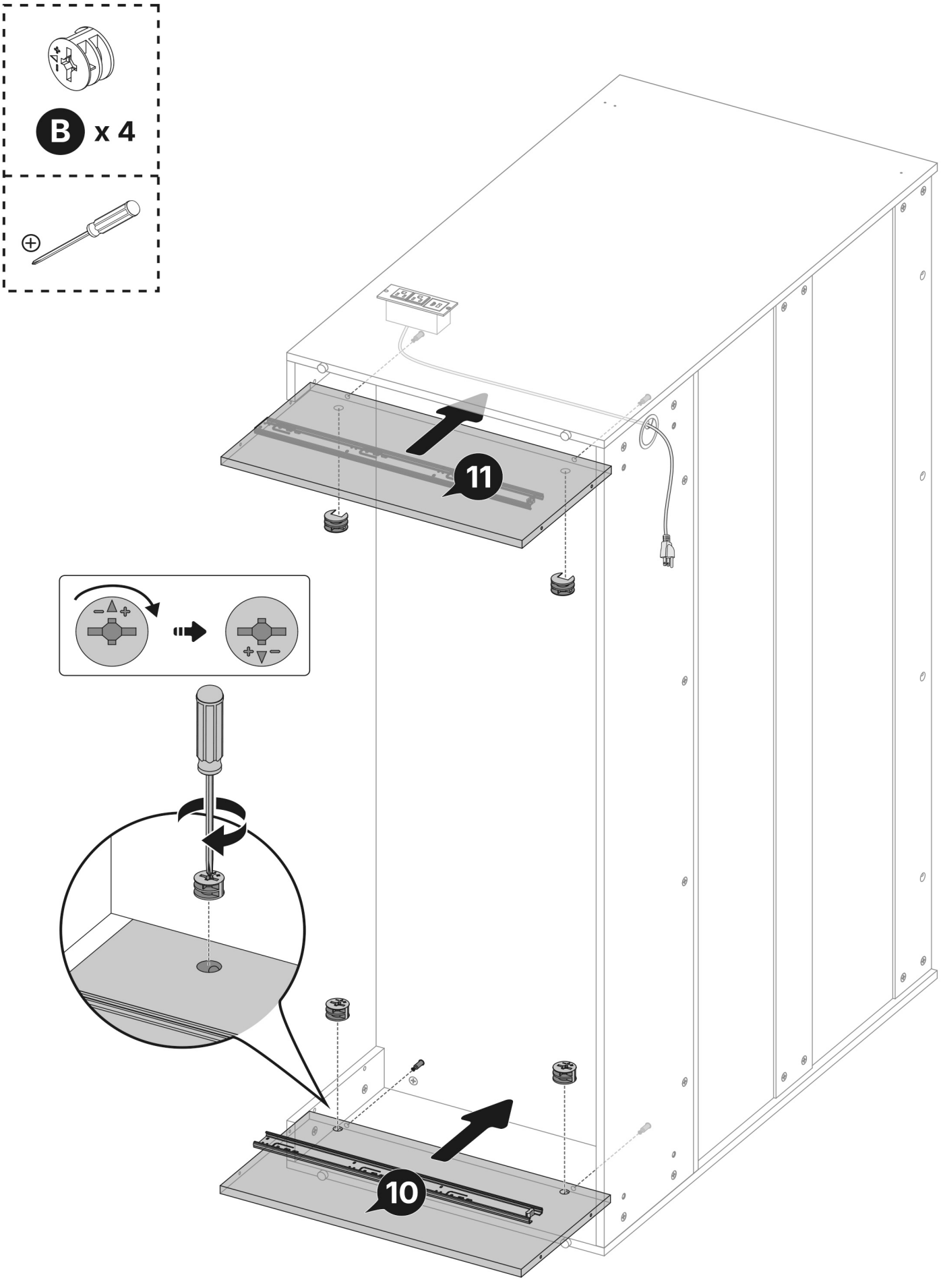
B x 4
11
10

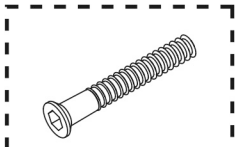

M6 x 38mm

D x 8

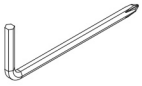

5/32″ (4mm)

W x 1



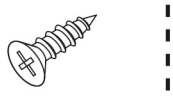

ST3.5 x 14mm

E x 2

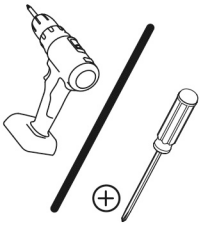

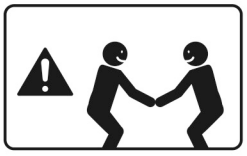

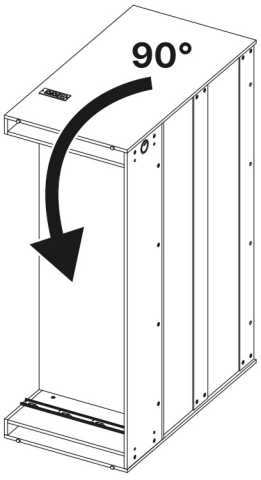

When flipping the cabinet, avoid pinching the power cord to prevent damage.

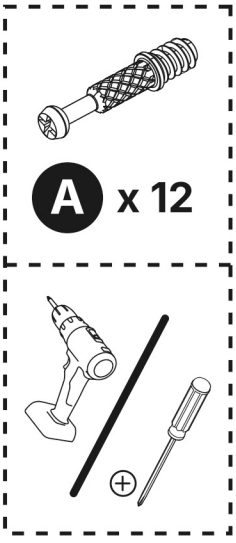
A x 12

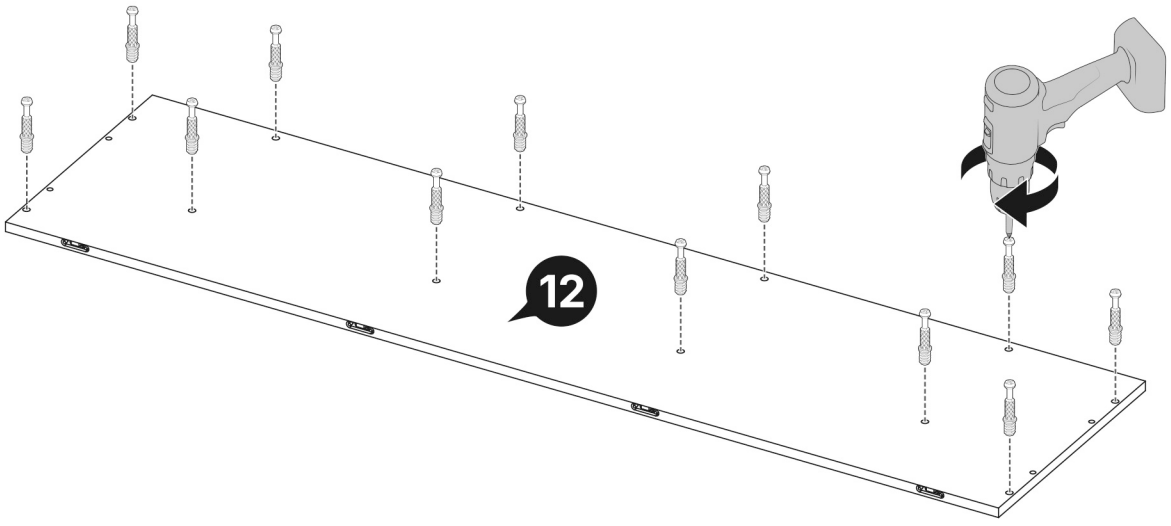
12

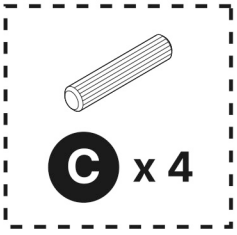
C x 4

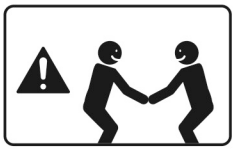

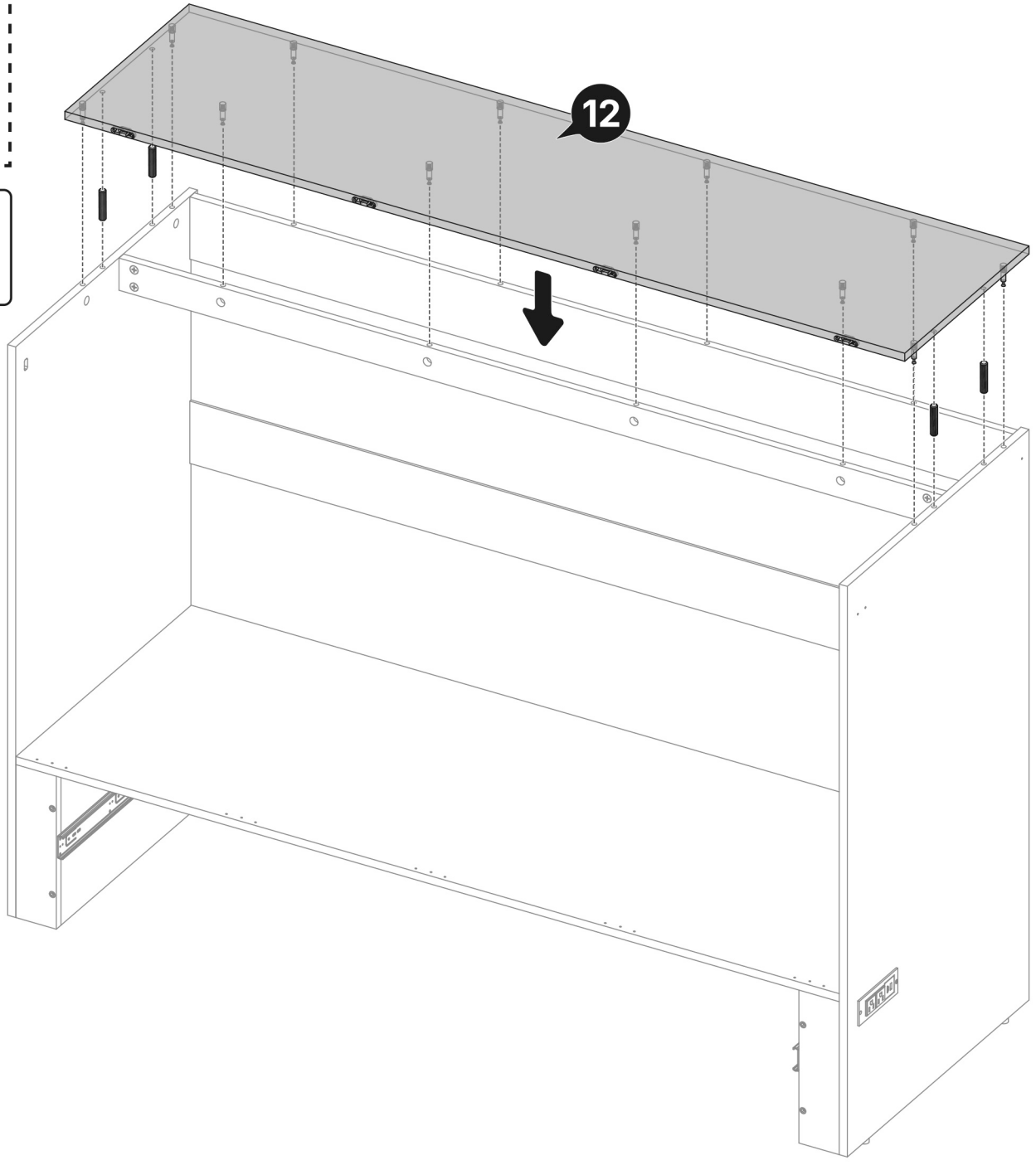
12

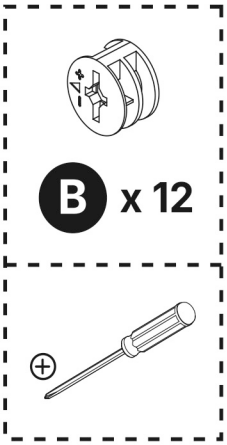
B x 12

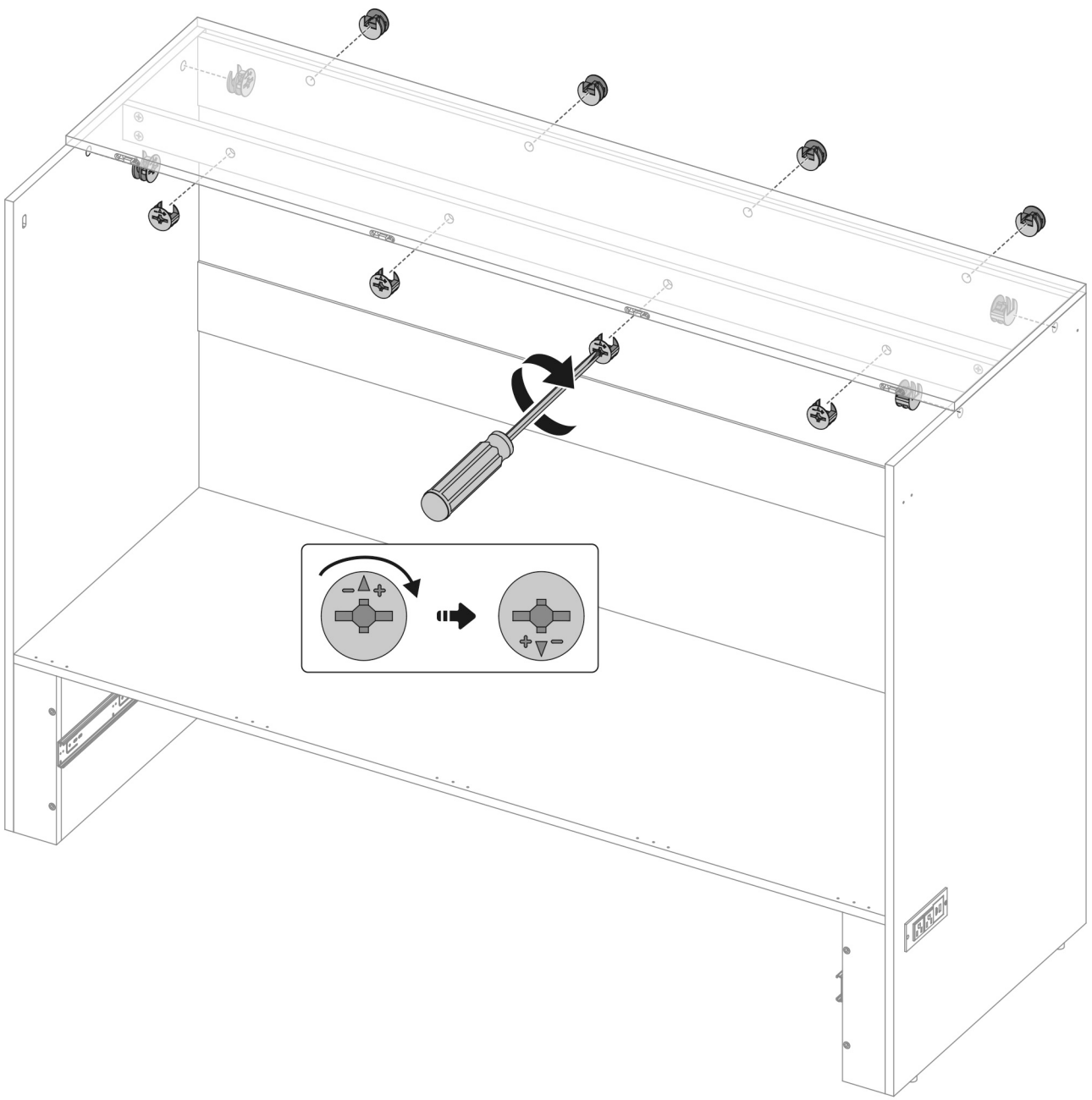

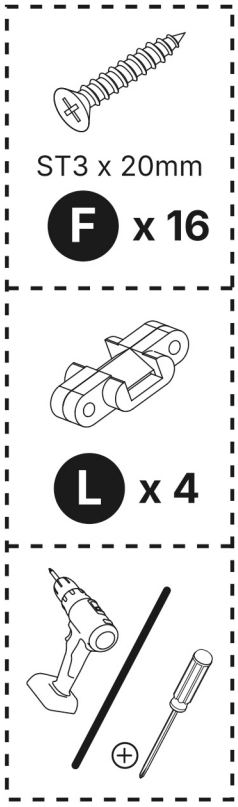
ST3 x 20mm
F x 16
L x 4

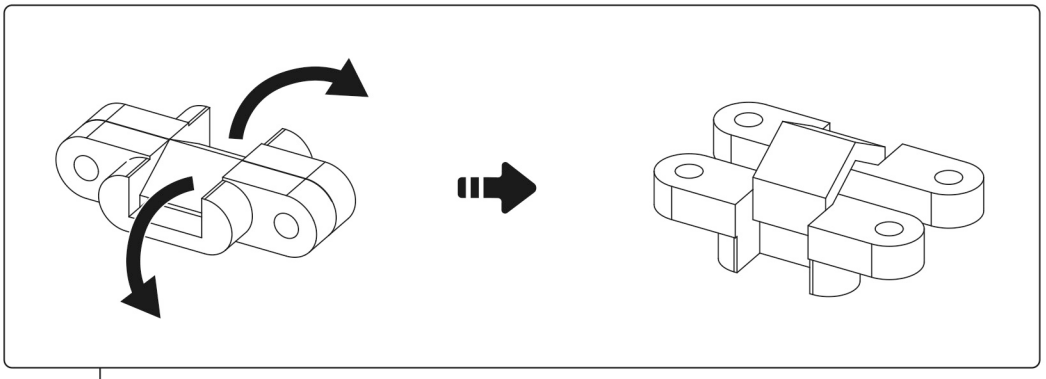

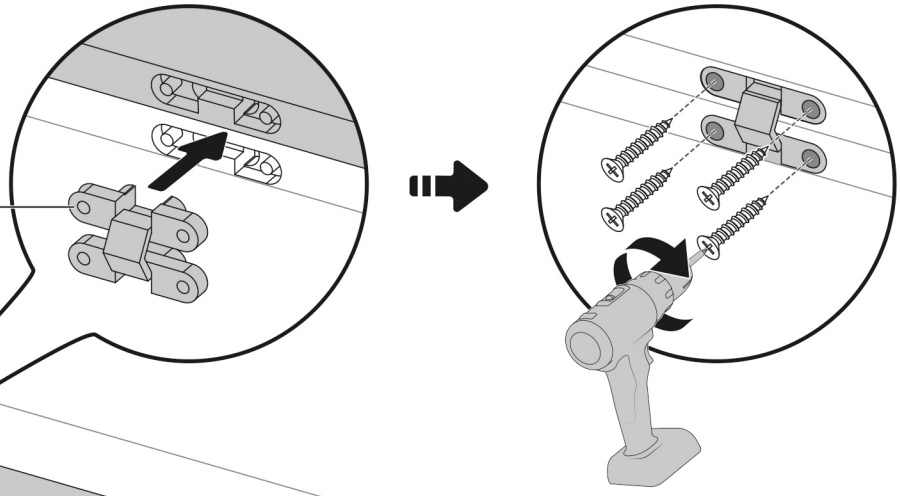

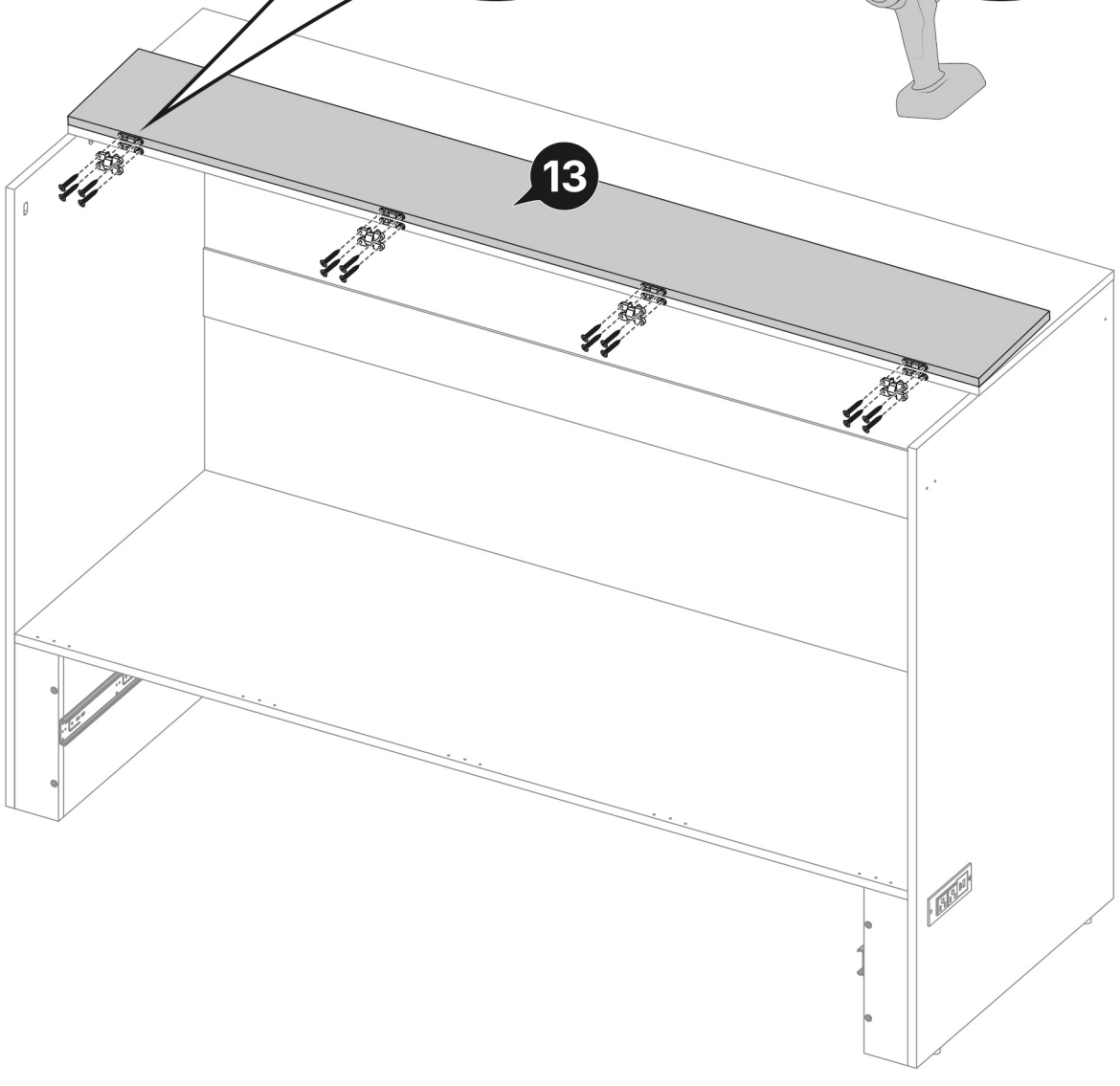
13

2 Assembling the Drawers

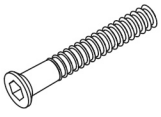

M6 x 38mm

D x 4

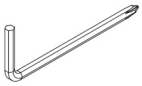

5/32″ (4mm)

W x 1

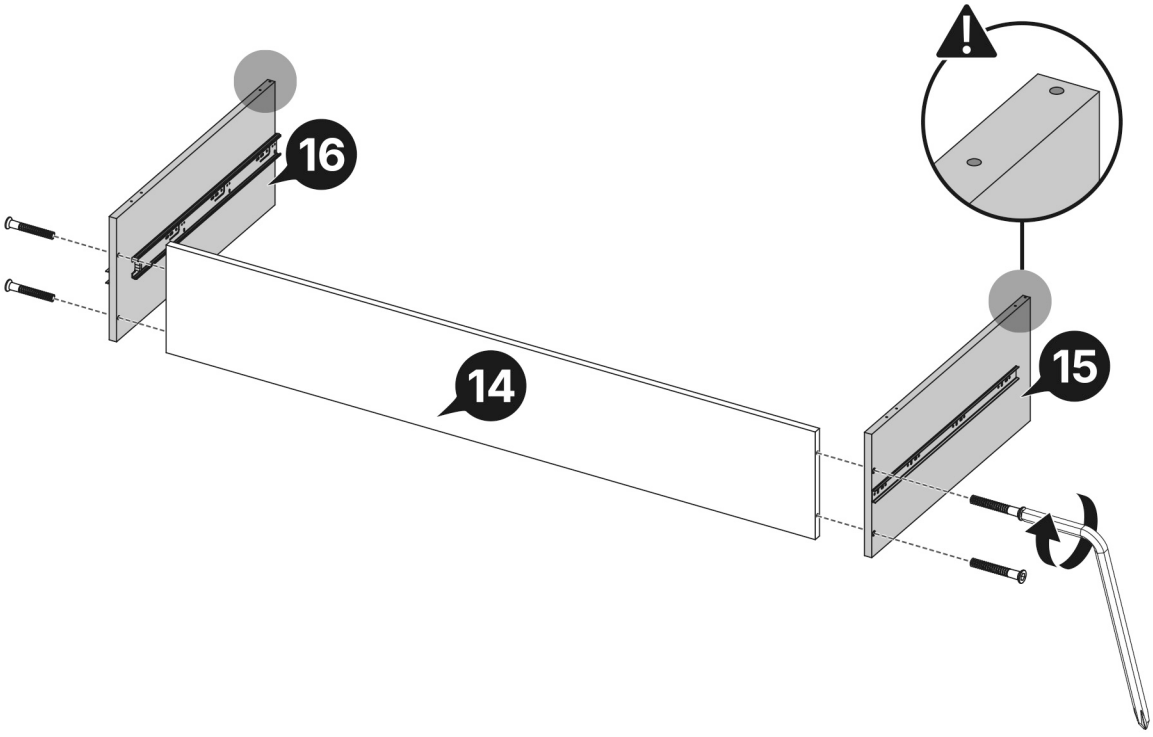

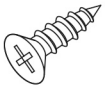

ST3.5 x 14mm

E x 8

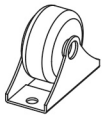

N x 4

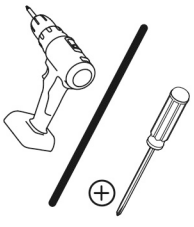

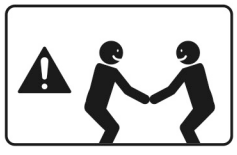

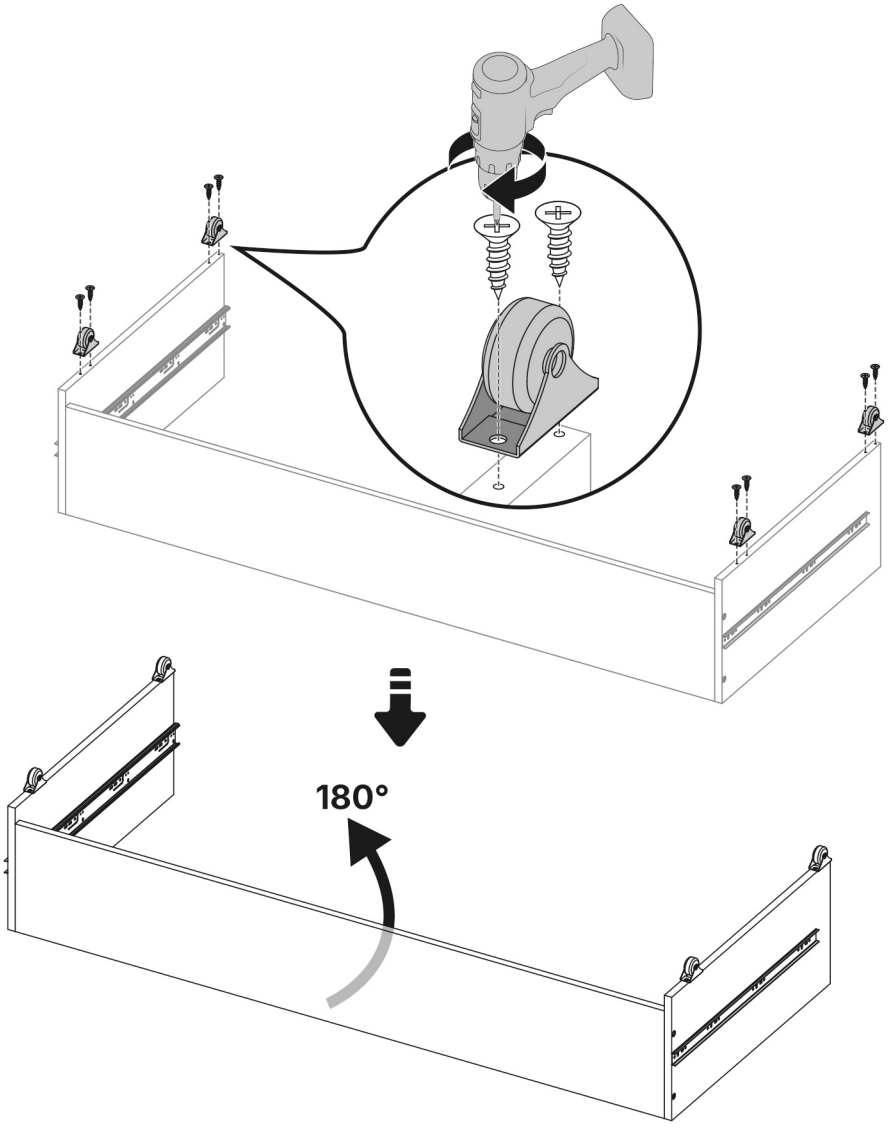

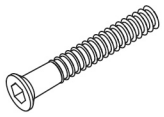

M6 x 38mm

D x 4

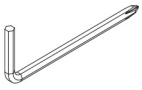

5/32″ (4mm)

W x 1

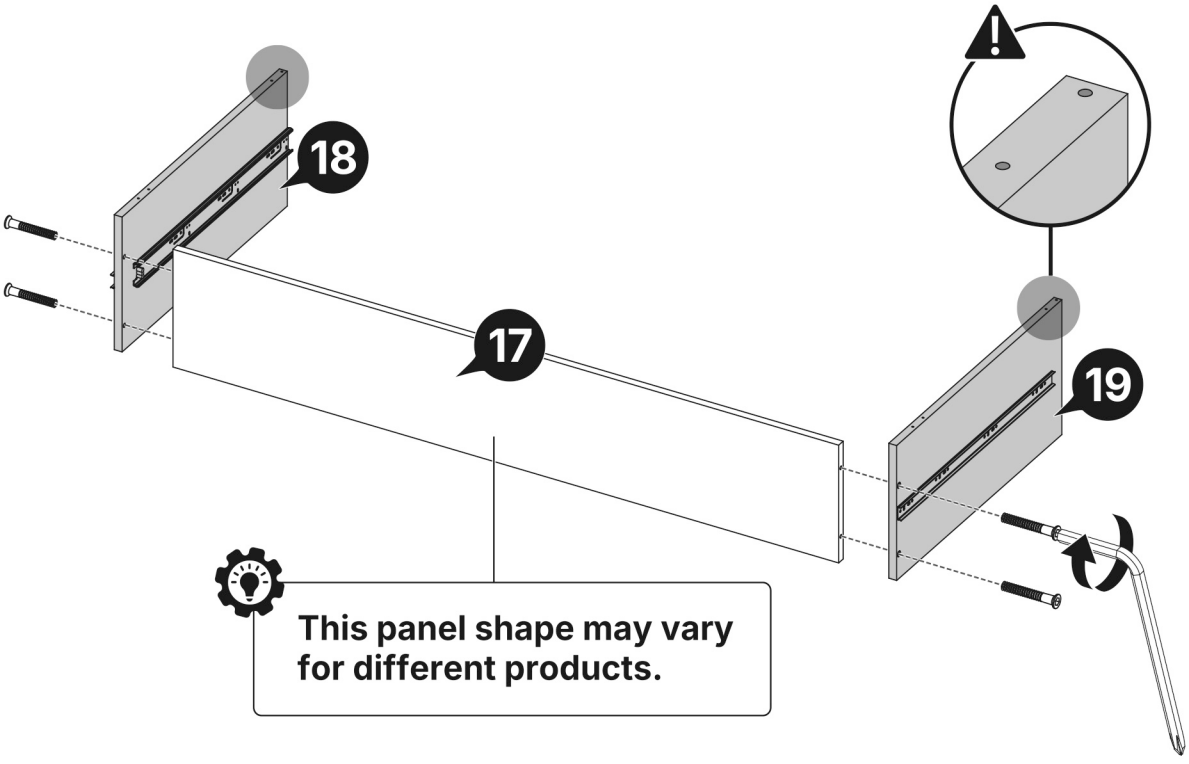



ST3.5 x 14mm

E x 8



N x 4

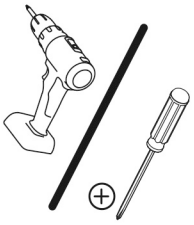

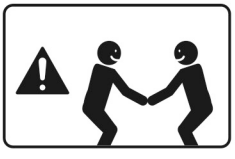

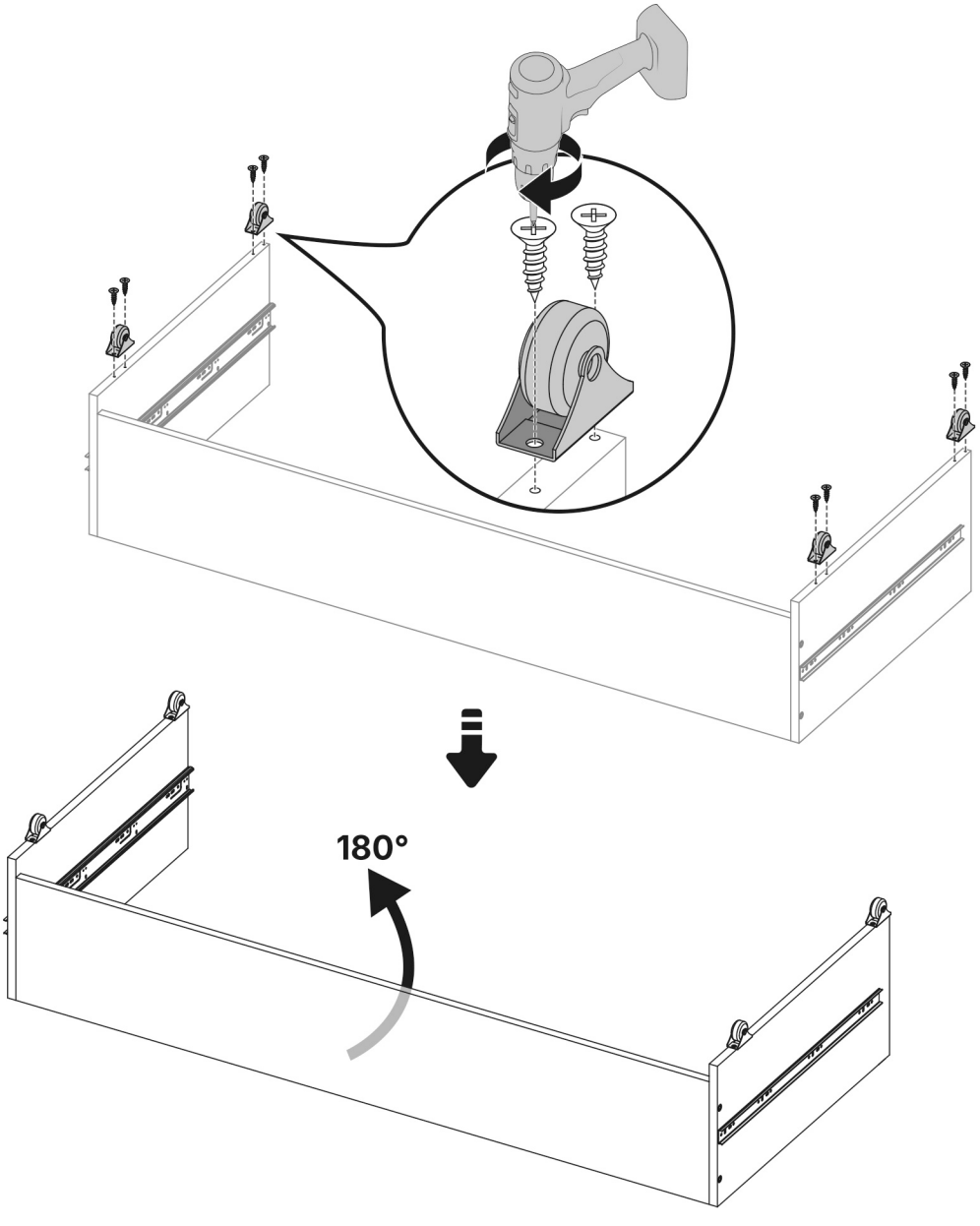

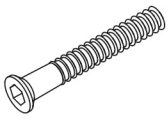

M6 x 38mm

D x 4

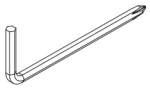

5/32″ (4mm)

W x 1

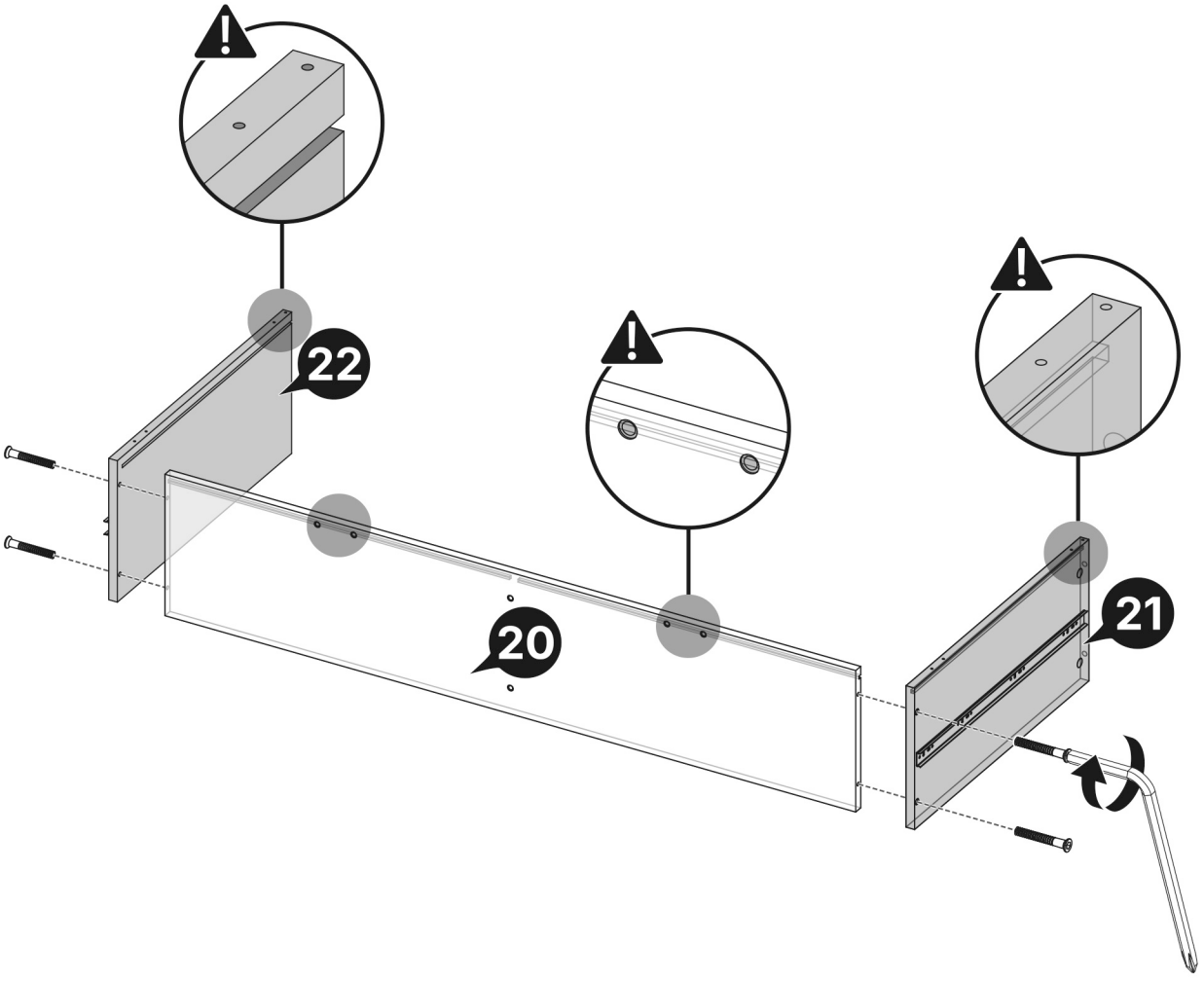

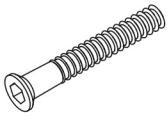

M6 x 38mm

D x 2

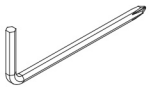

5/32″ (4mm)

W x 1

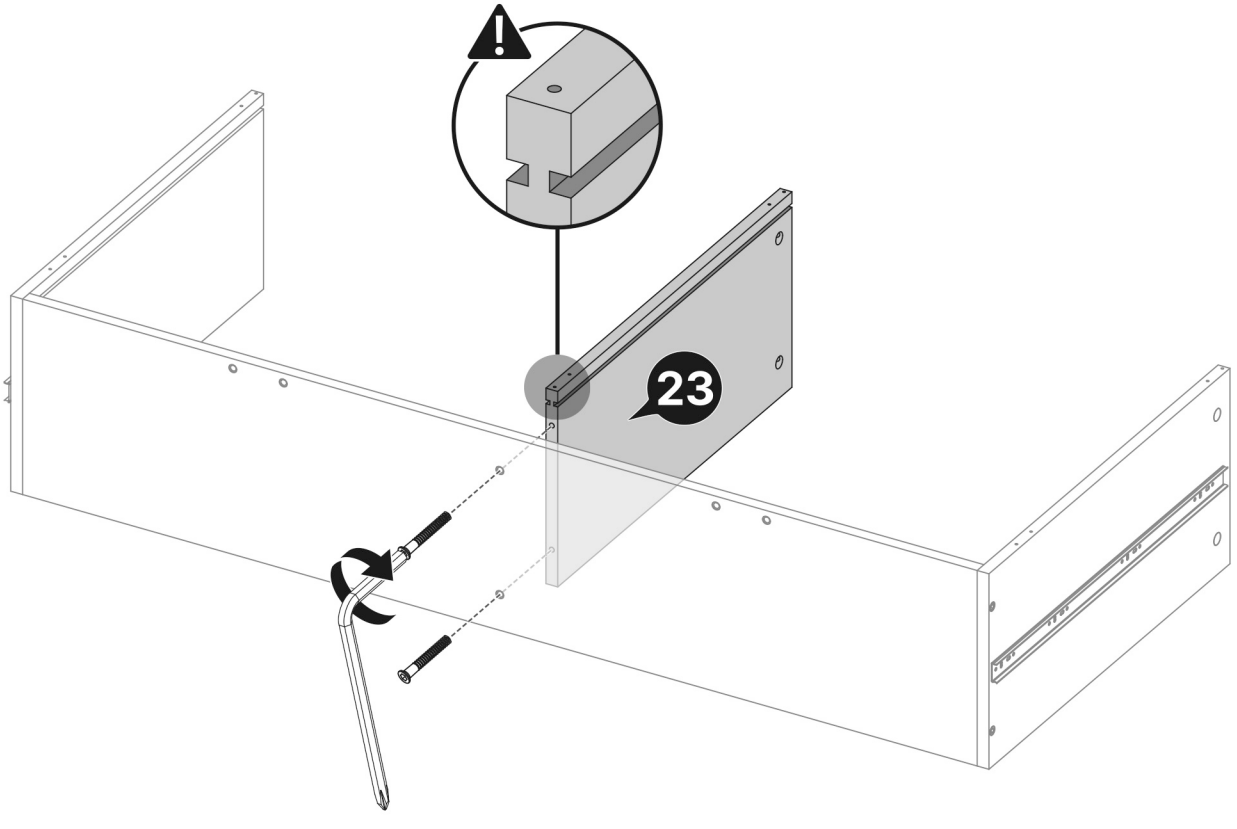

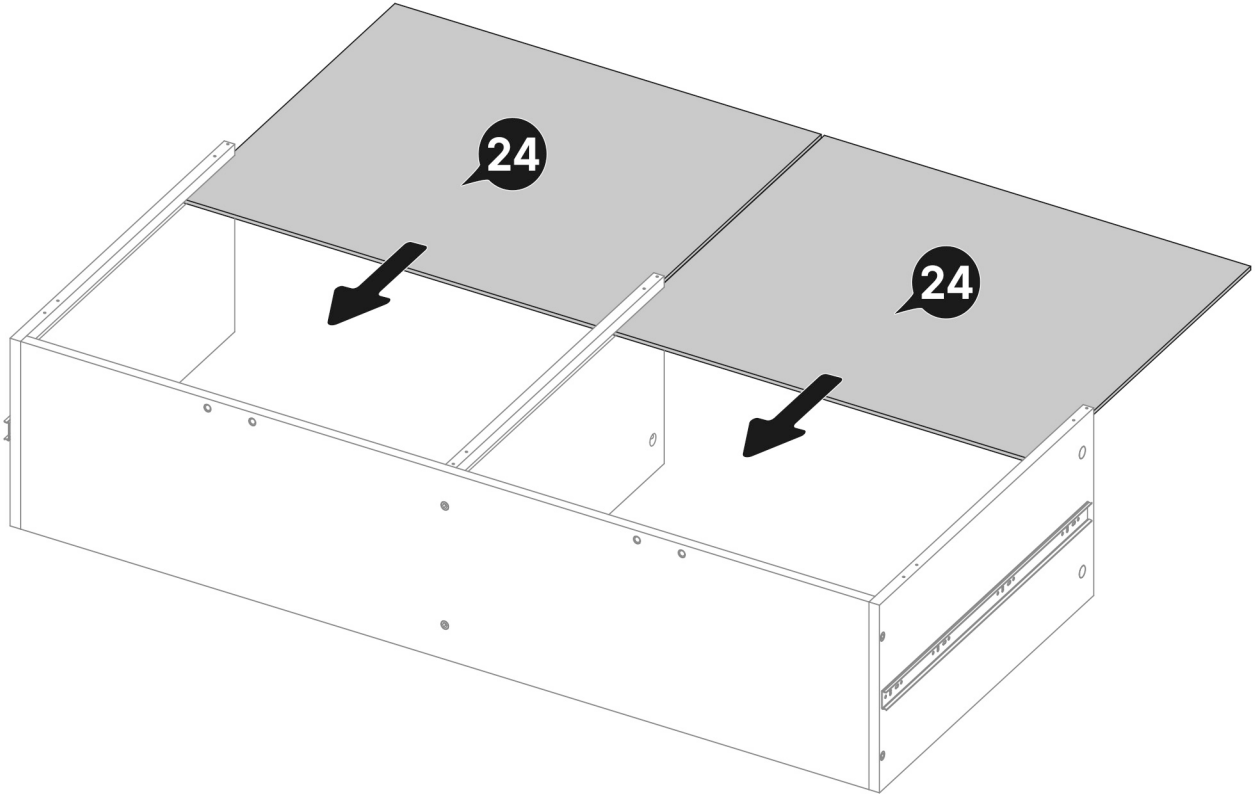

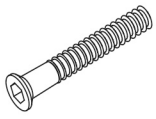

M6 x 38mm

D x 4

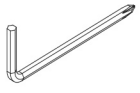

5/32″ (4mm)

W x 1

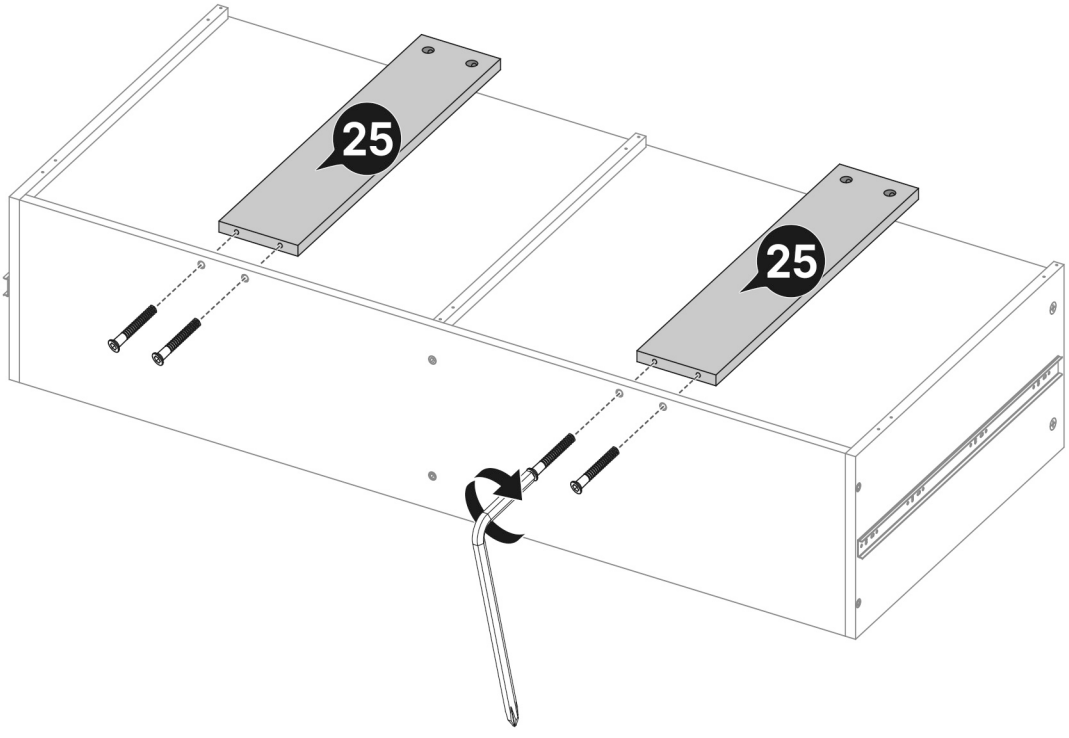

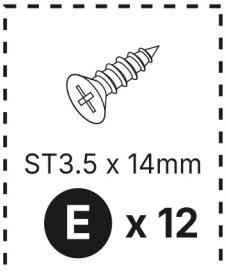

ST3.5 x 14mm

E x 12



N x 6

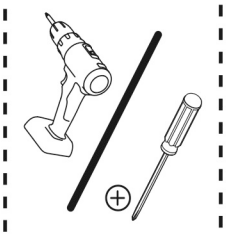

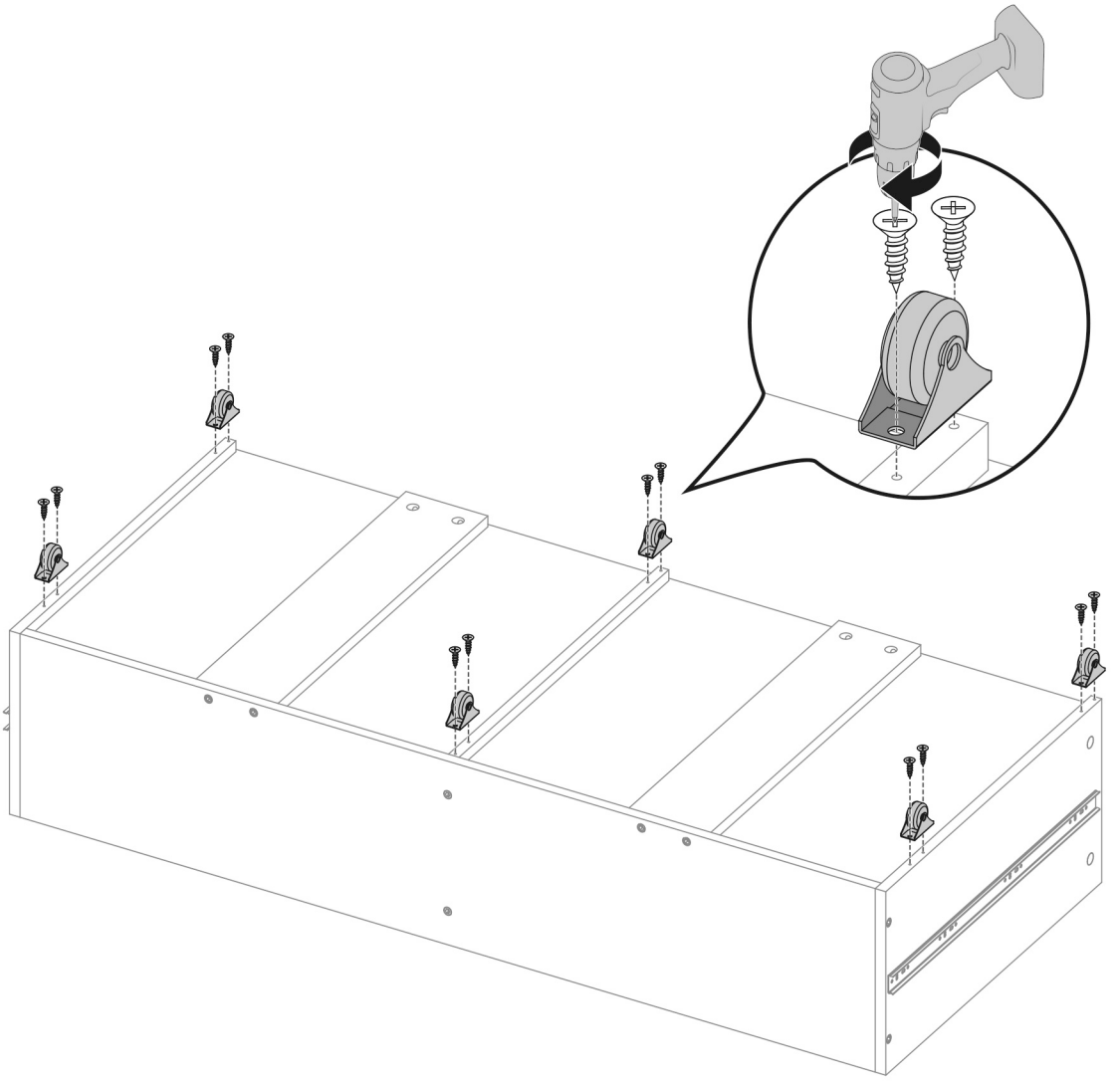

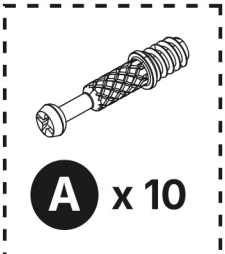

A x 10

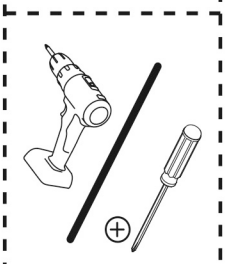

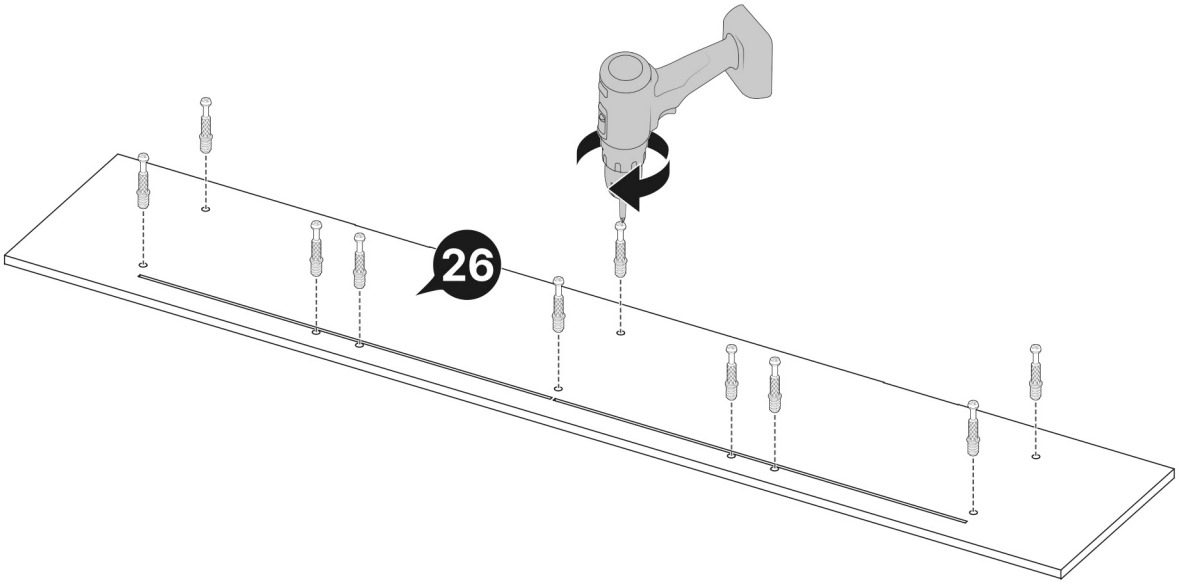

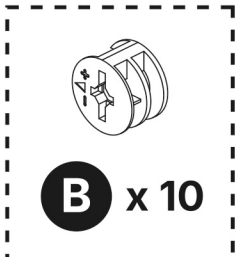

B x 10

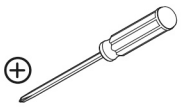

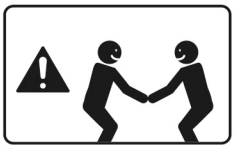

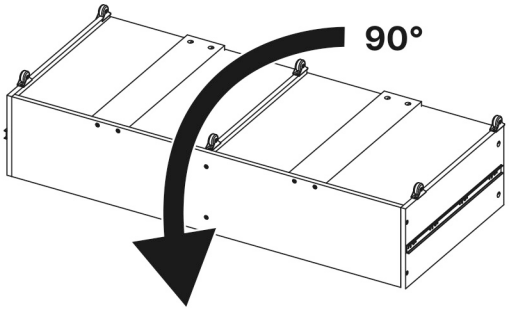

M5 x 16mm

Y x4

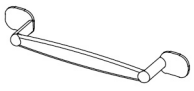

O x2

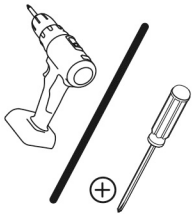

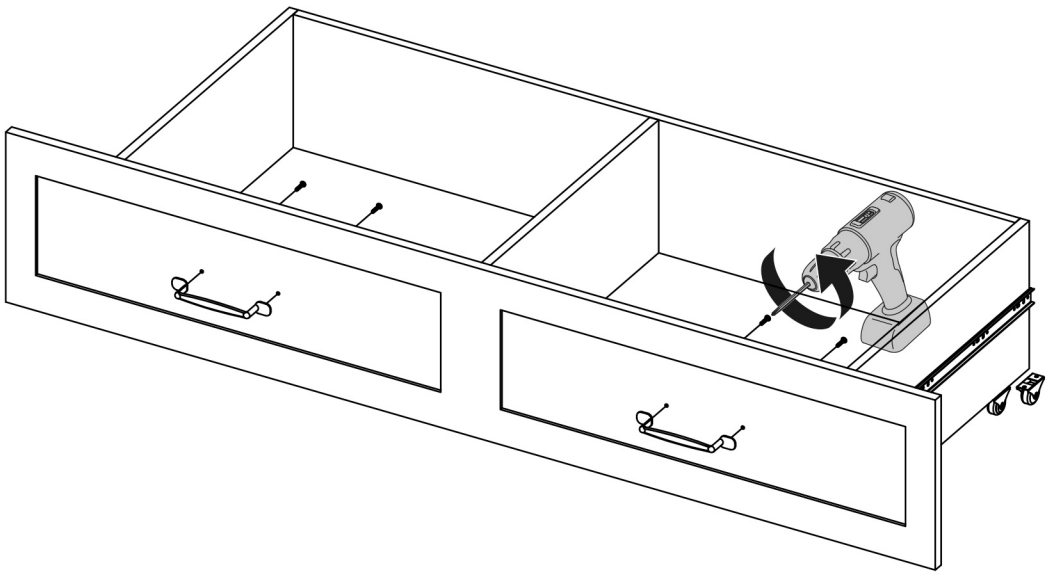

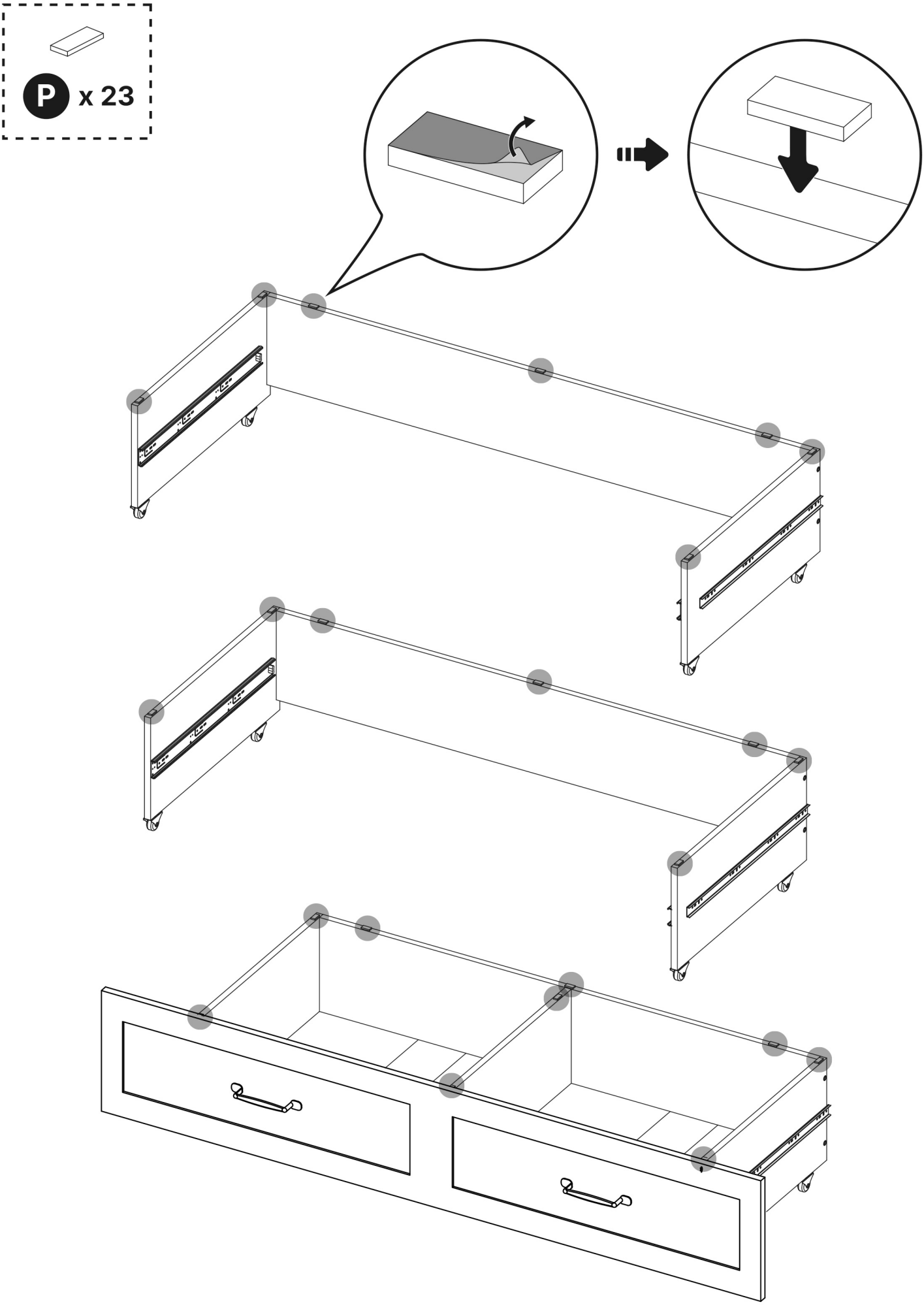
P x 23

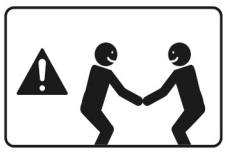

Align the drawer slides on both sides, then slide the drawer into place. Do not install on carpeted surfaces, as carpet increases friction and may prevent the drawer from sliding in smoothly.

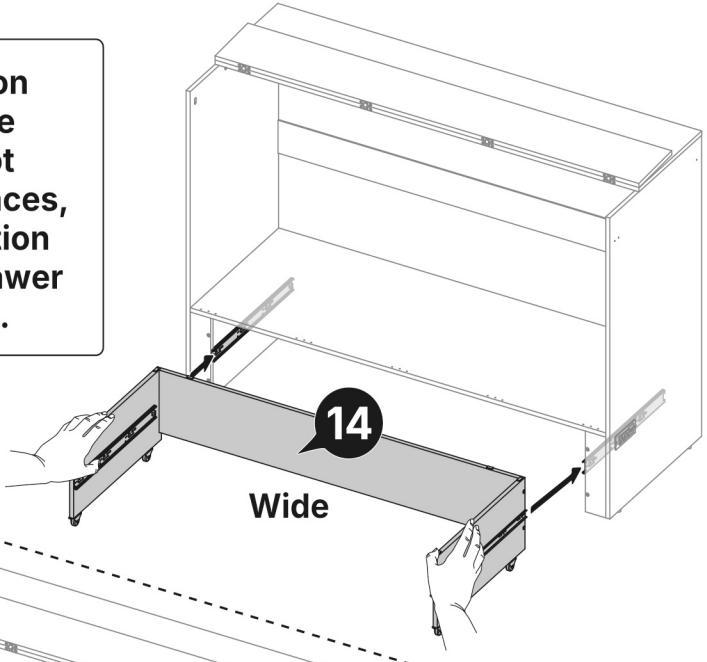

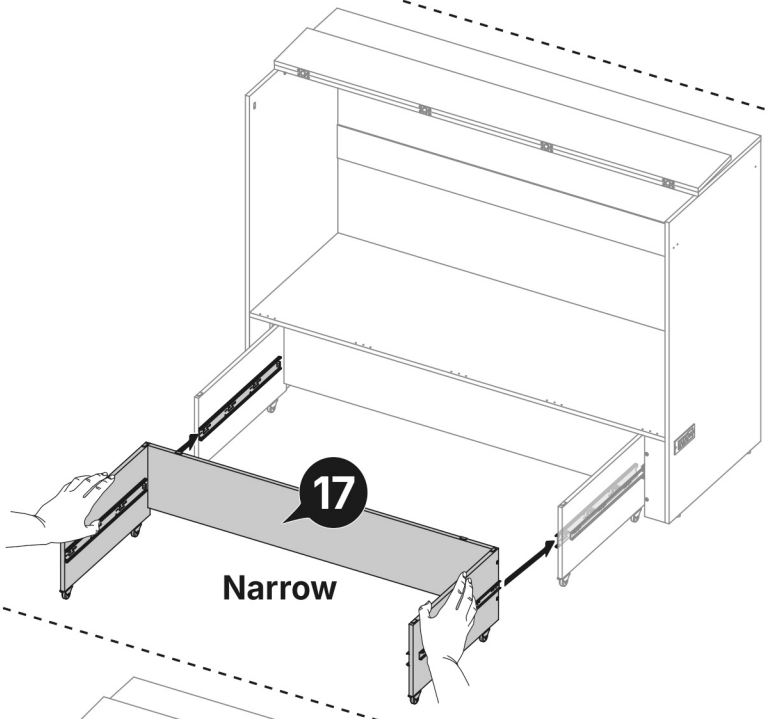

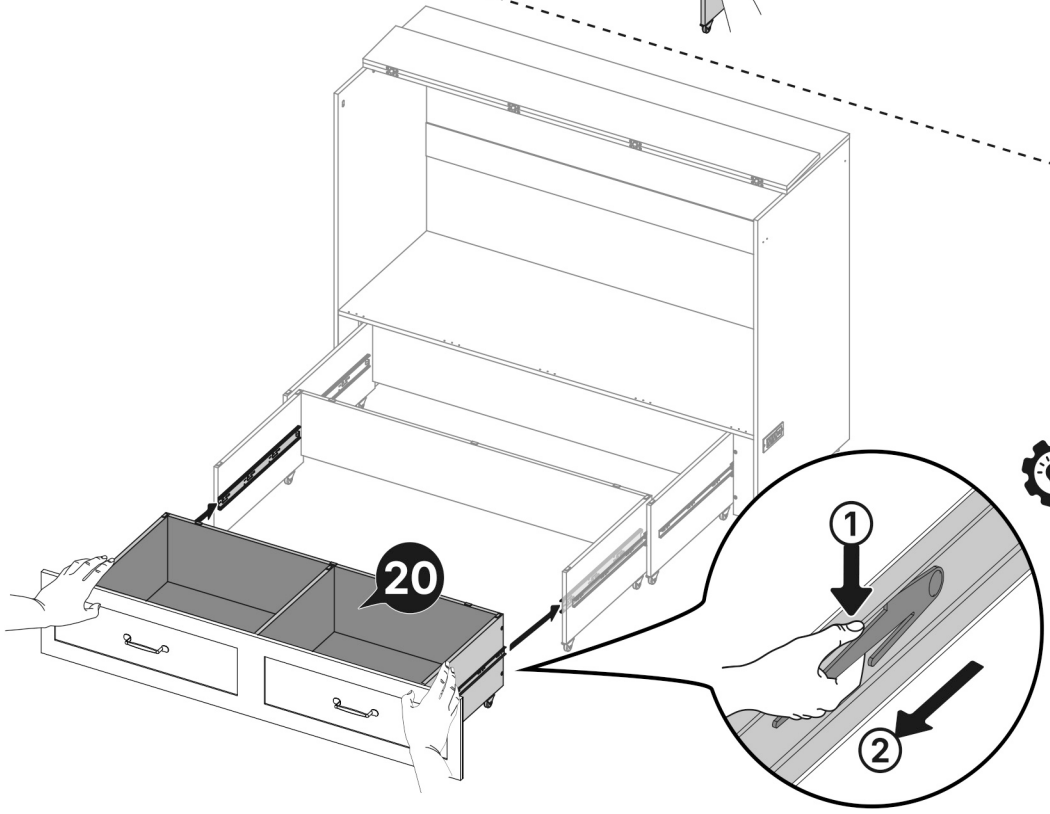

If you need to remove the drawer, press the tab on one side up and the tab on the other side down at the same time.

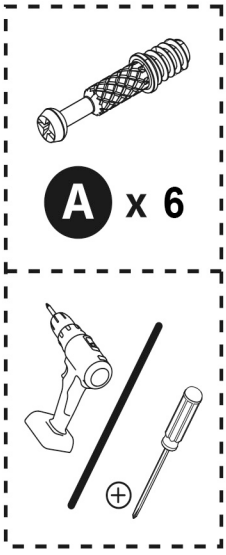
A x 6

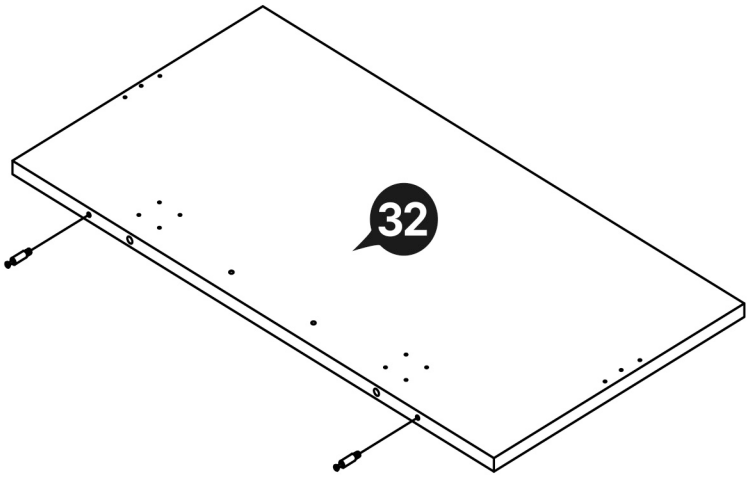
32

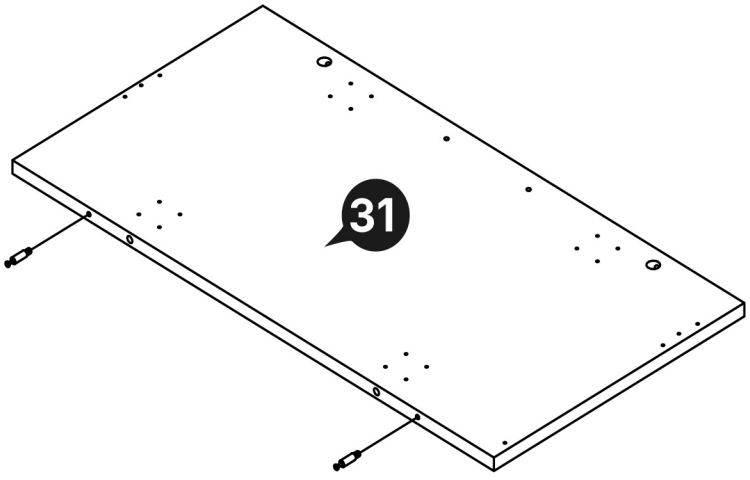
31

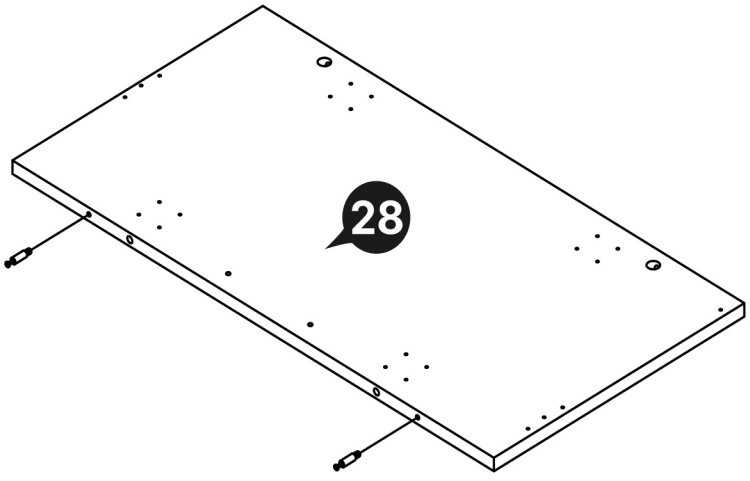
28

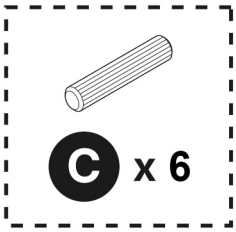

C x 6

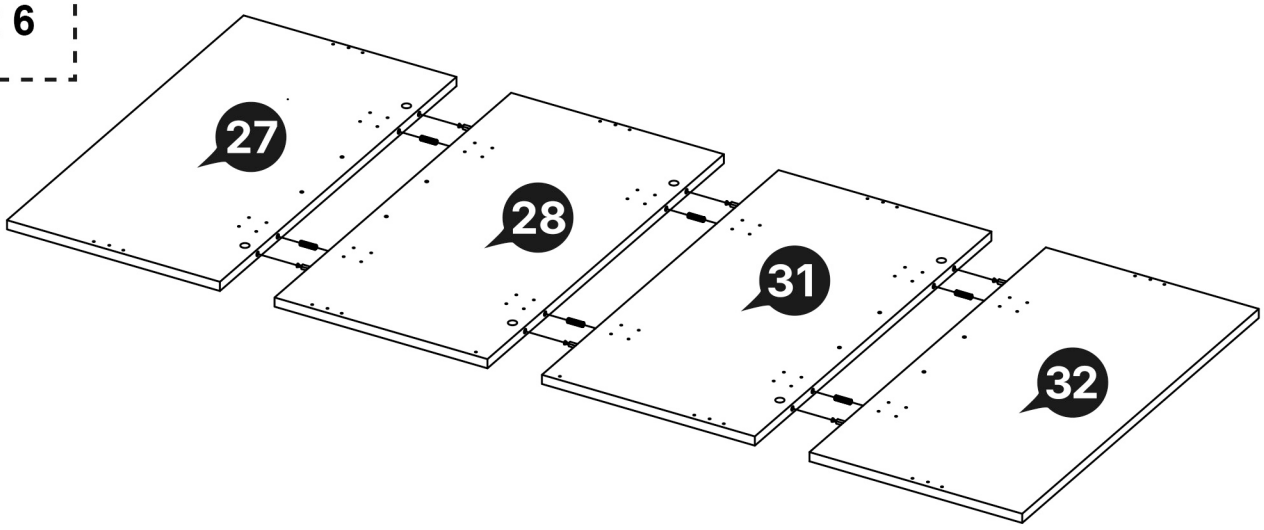

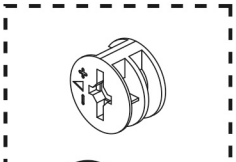

B x 6

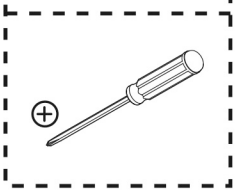

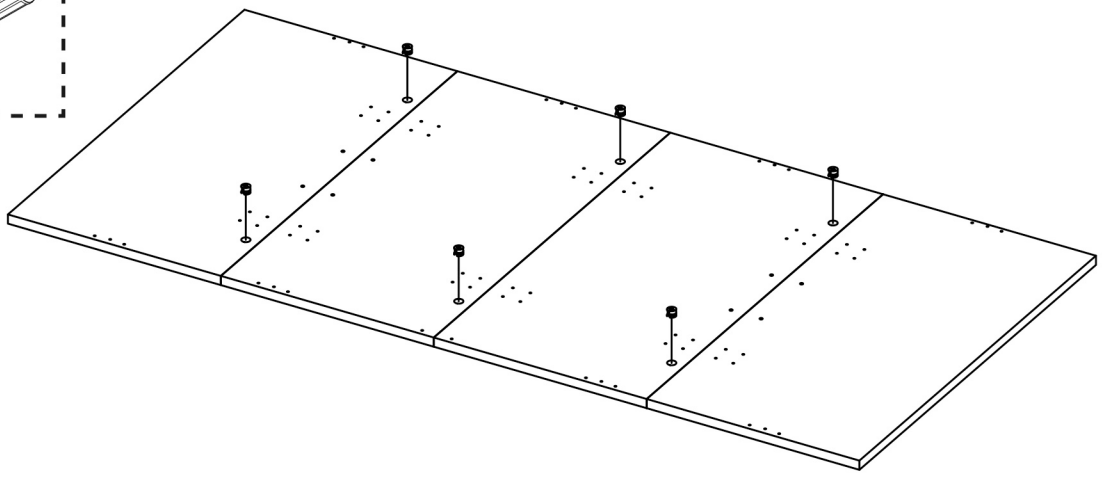

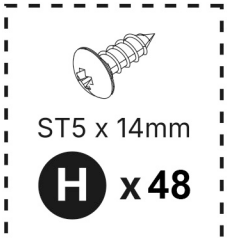

ST5 x 14mm

H x 48

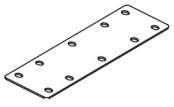

X x 6

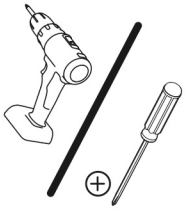

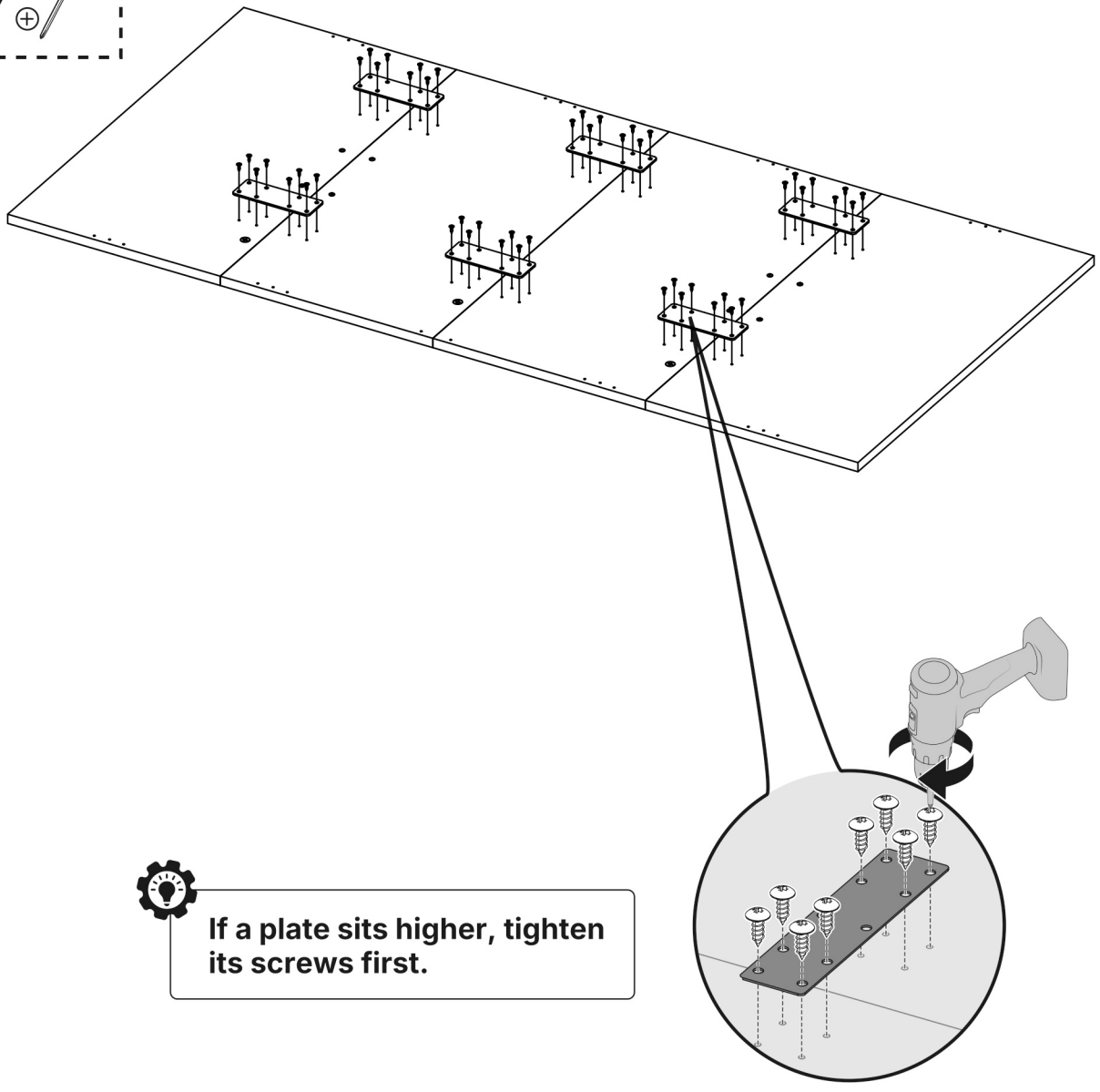

If a plate sits higher, tighten its screws first.

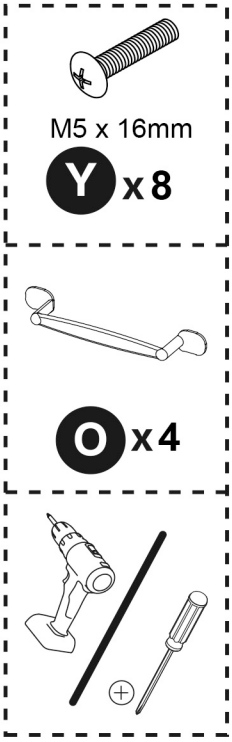

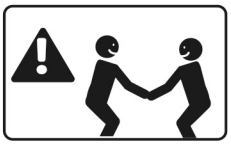

When lifting the installation handle, two people are required to flip and lift it. Do not press hard on the middle door panel connection.

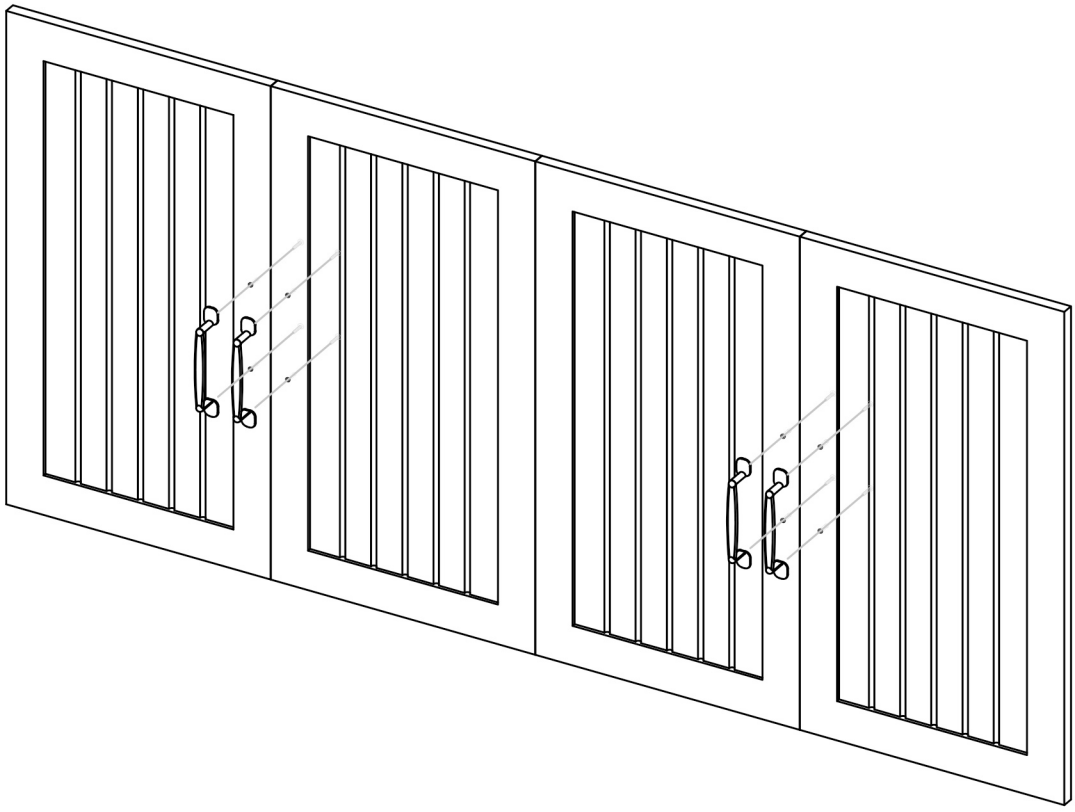

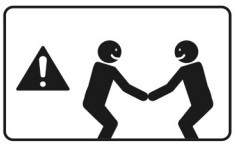

When fixing it to the bed frame, please check that all the screws on the door panel are fully tightened. This step requires two people to lift it, and the middle part of the door panel needs to be supported by hand.

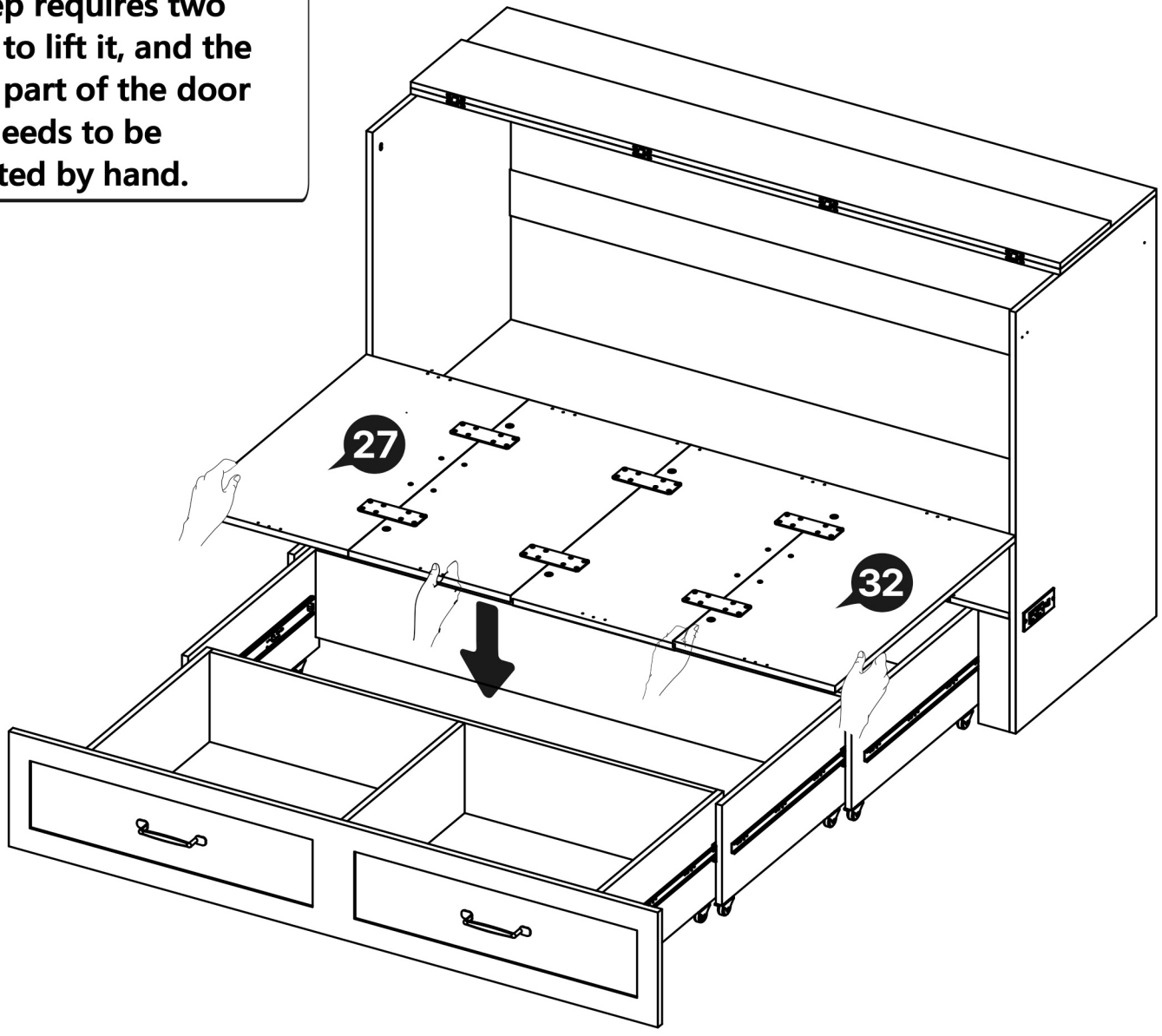

Before placing the panel, make sure all drawers are fully extended.

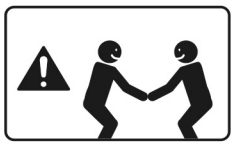

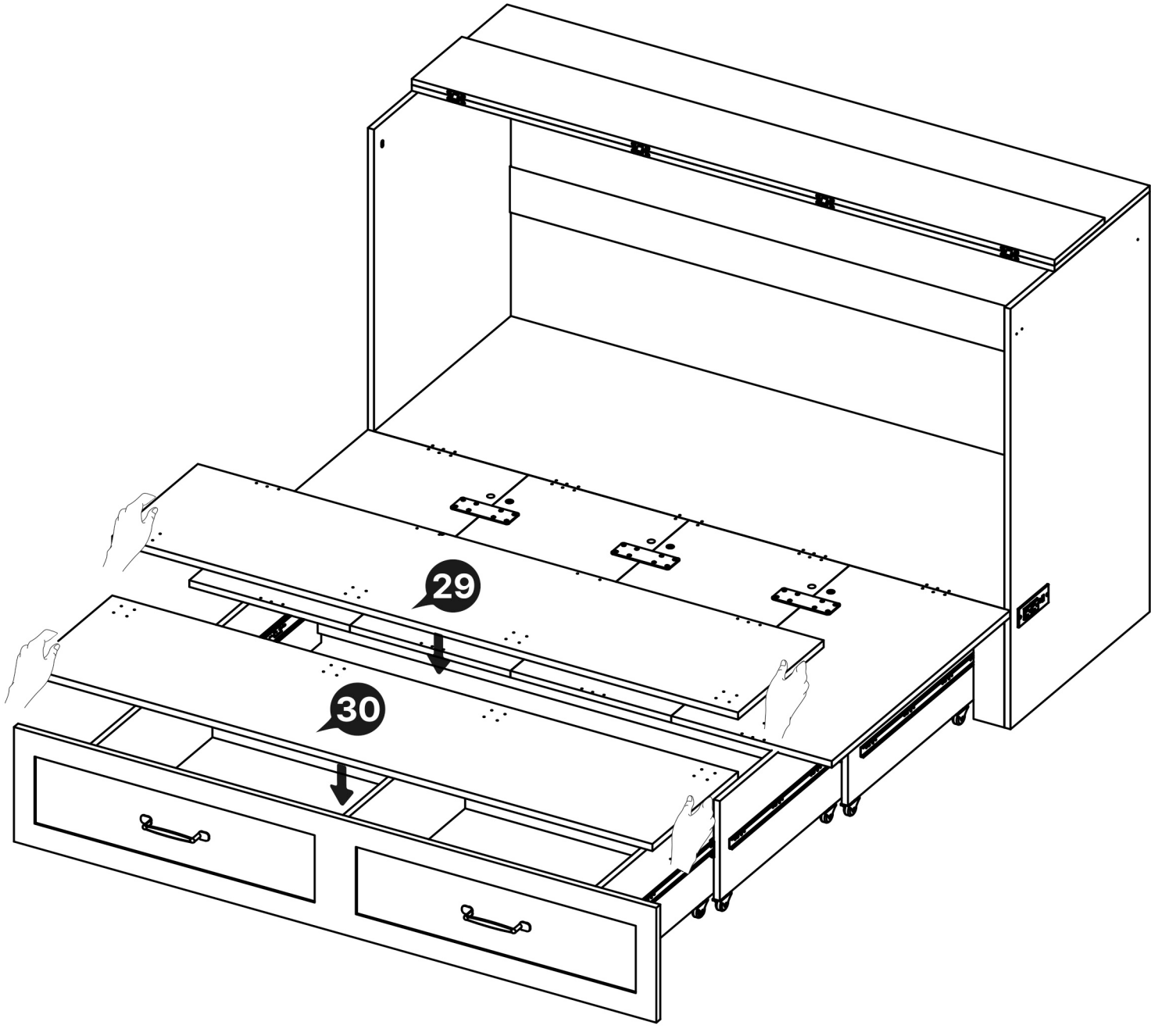
29
30

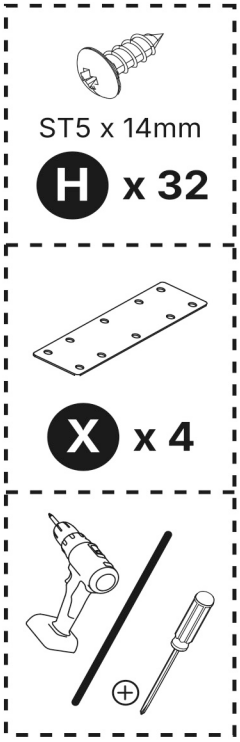
ST5 x 14mm
H x 32
X x 4

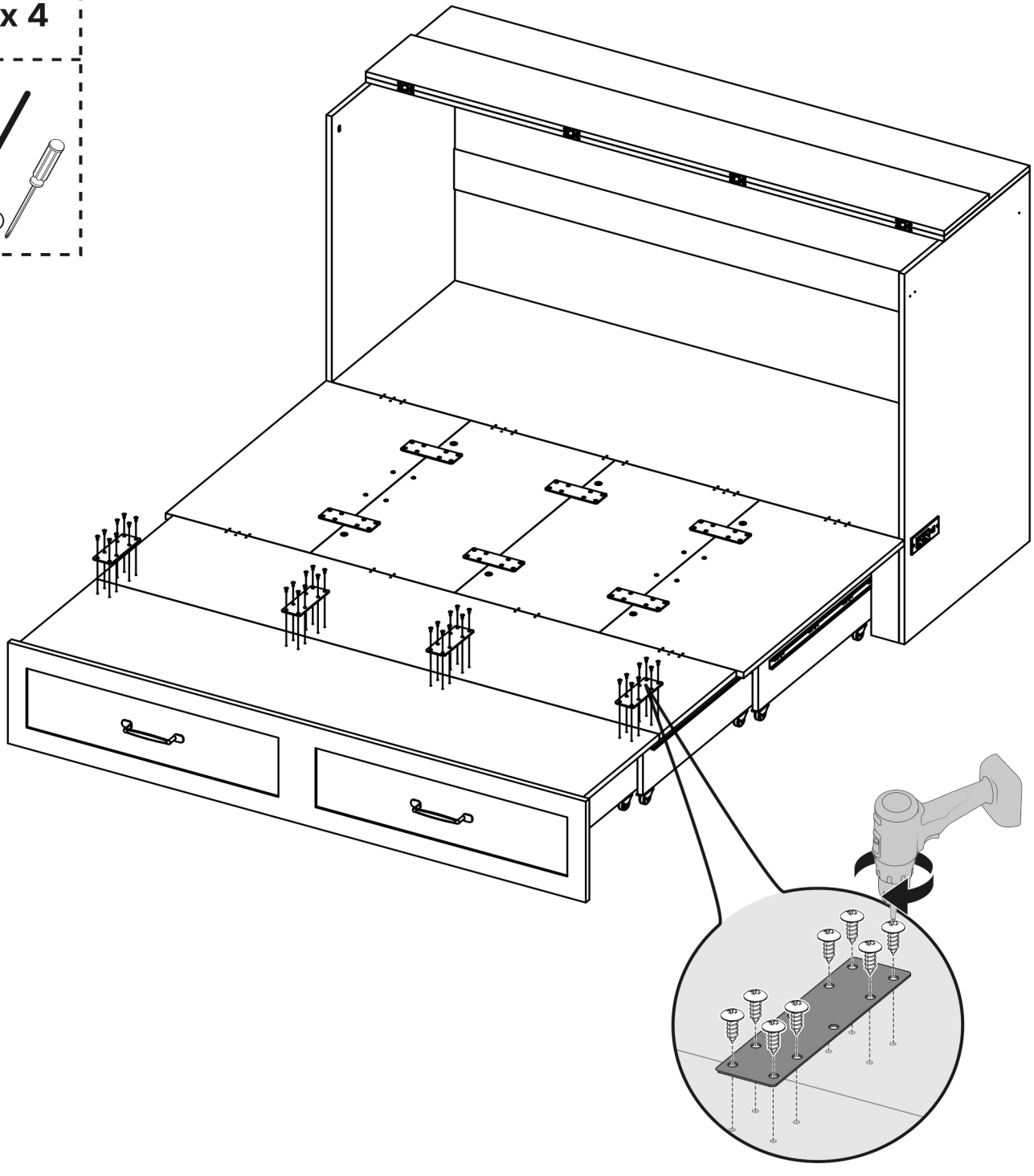

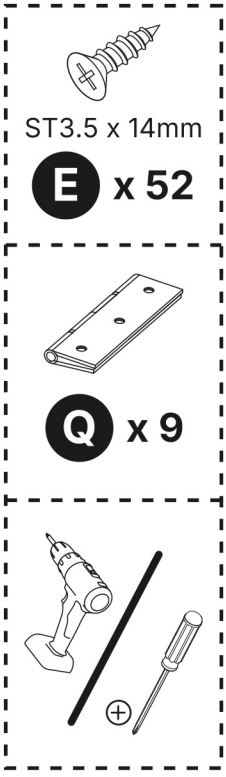
ST3.5 x 14mm
E x 52
Q x 9

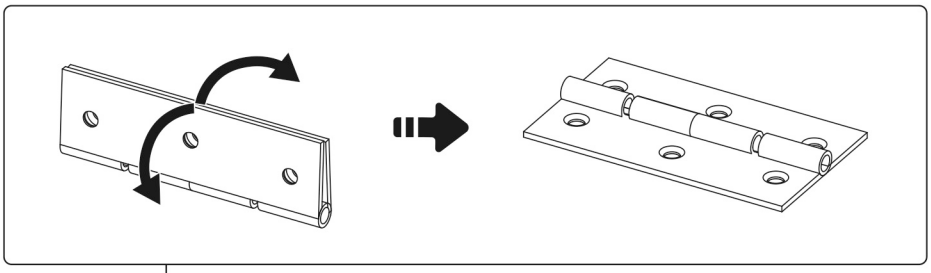

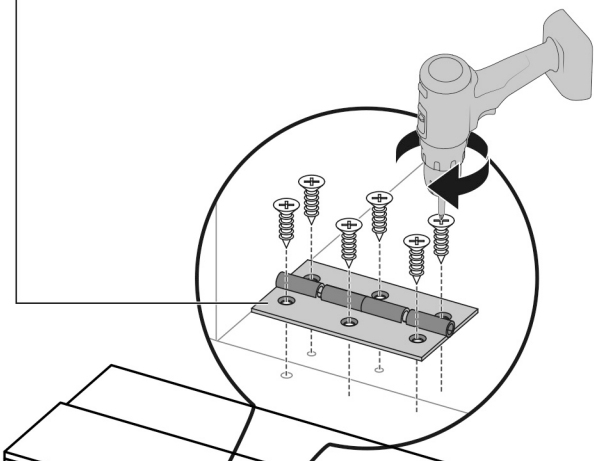

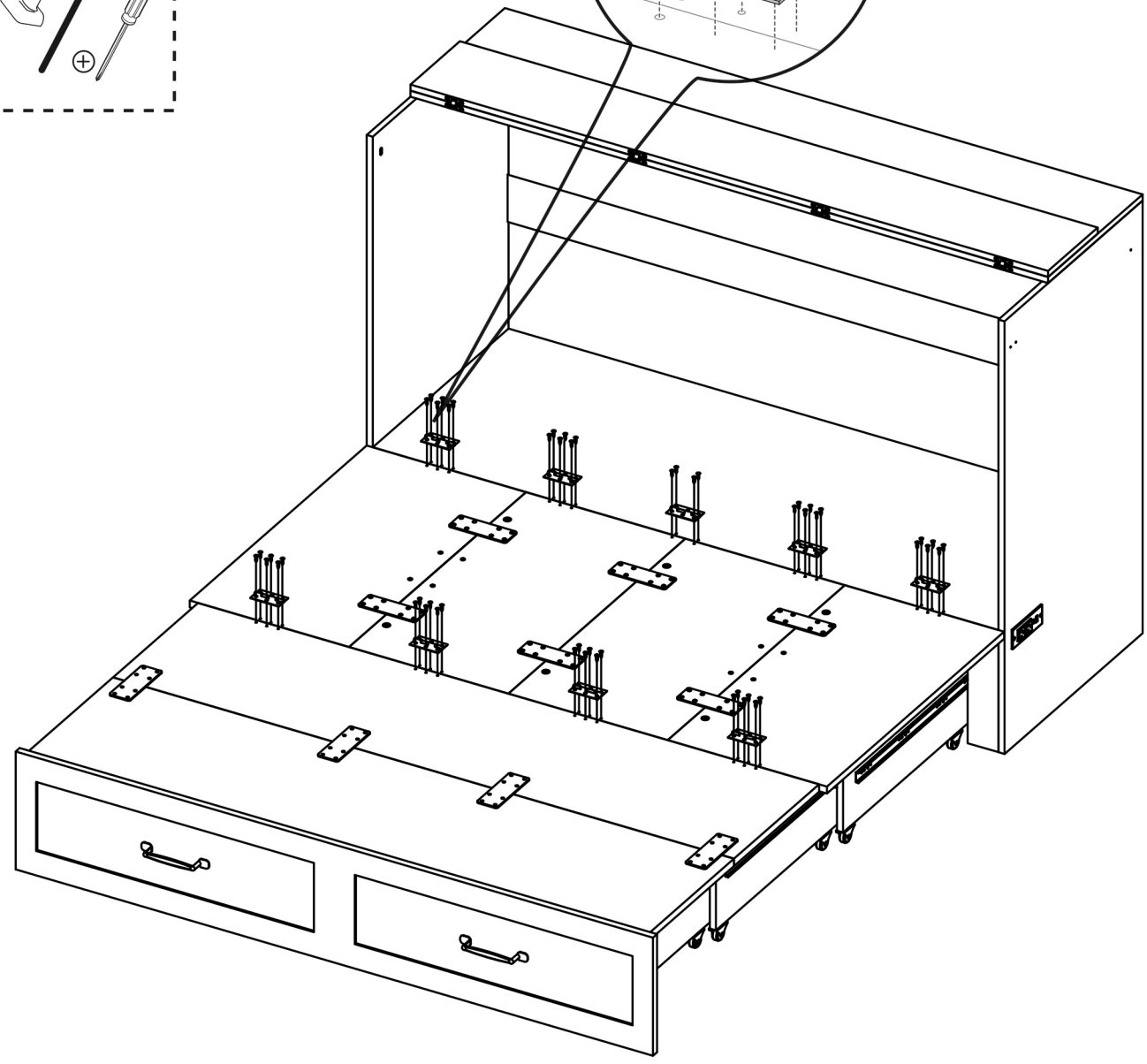

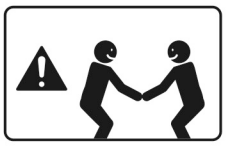

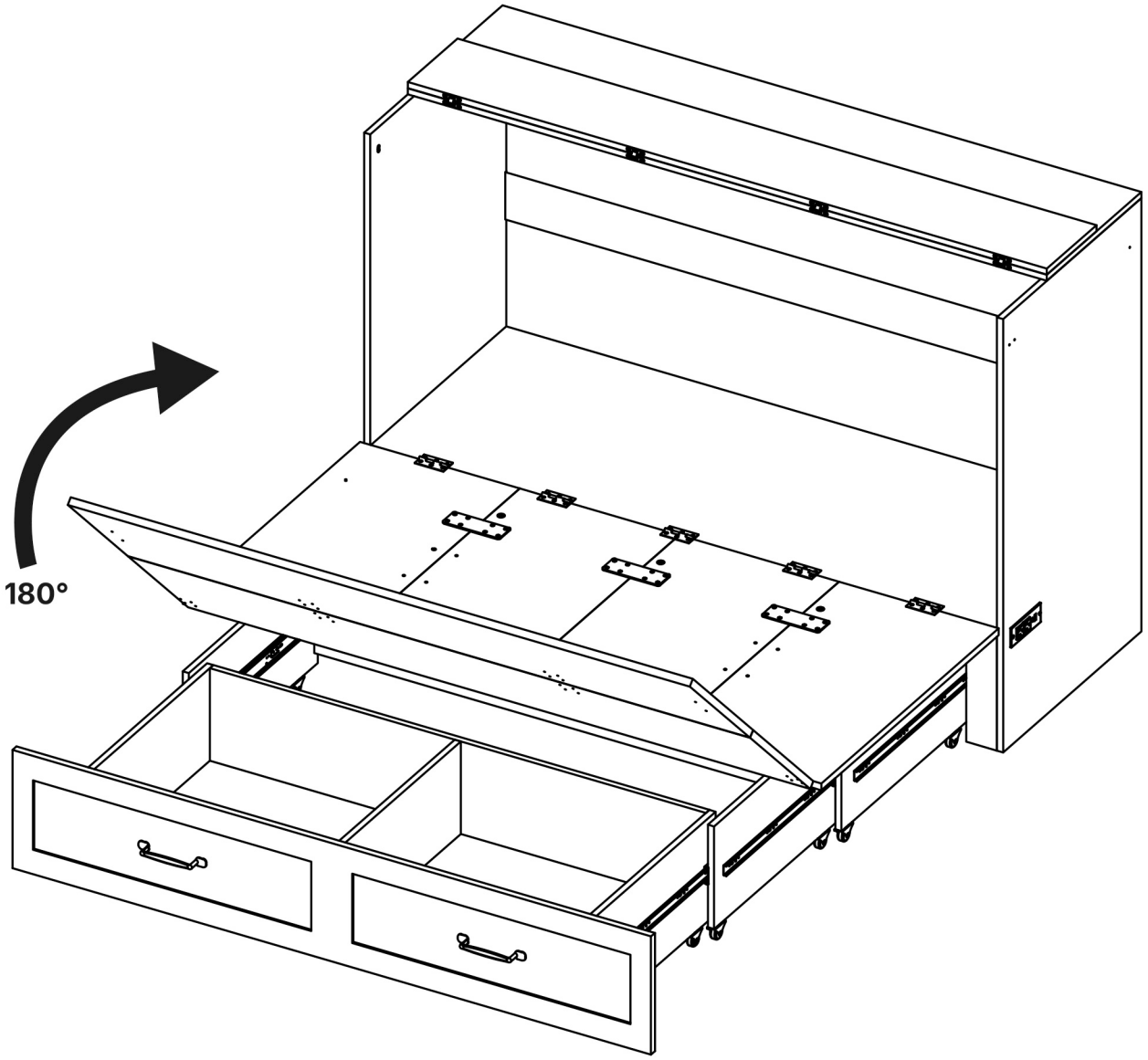
180°

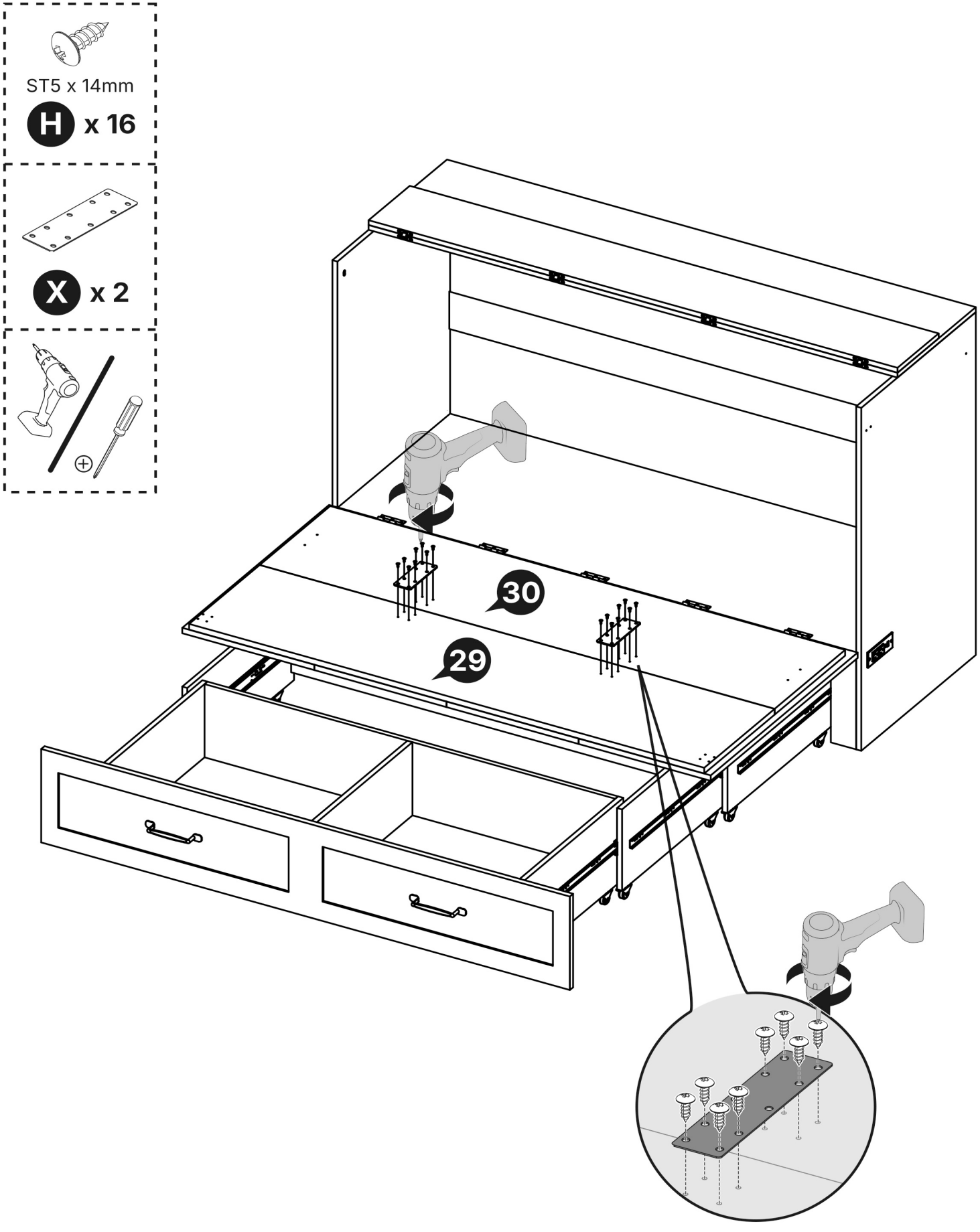
ST5 x 14mm
H x 16
X x 2
30
29

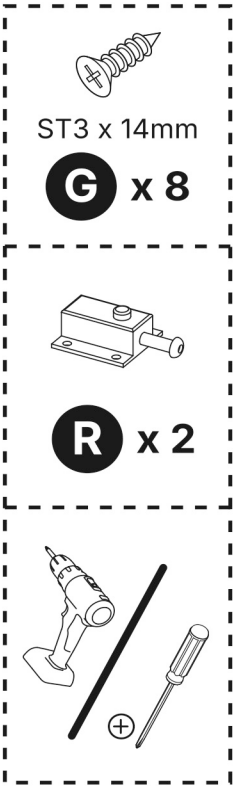
ST3 x 14mm
G x 8
R x 2

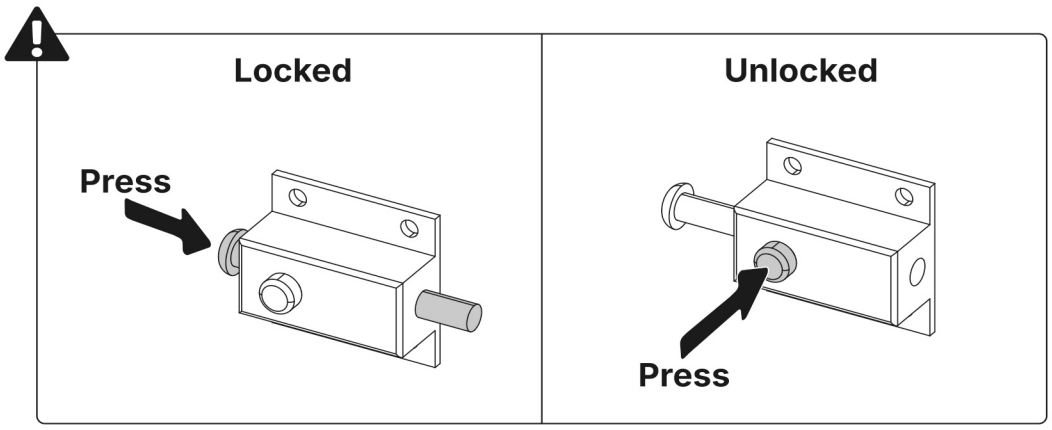
Locked
Press
Unlocked
Press

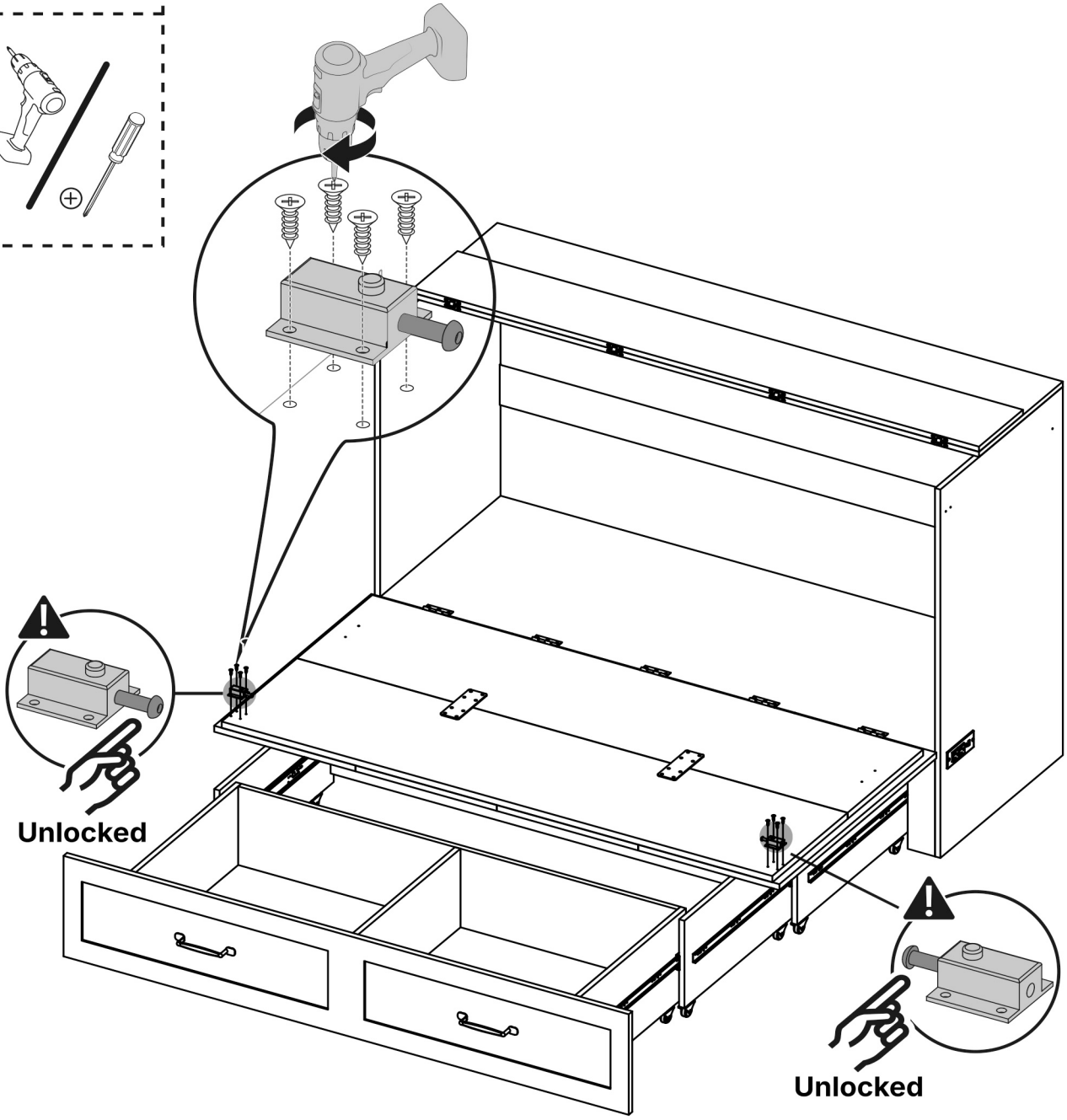
Unlocked
Unlocked

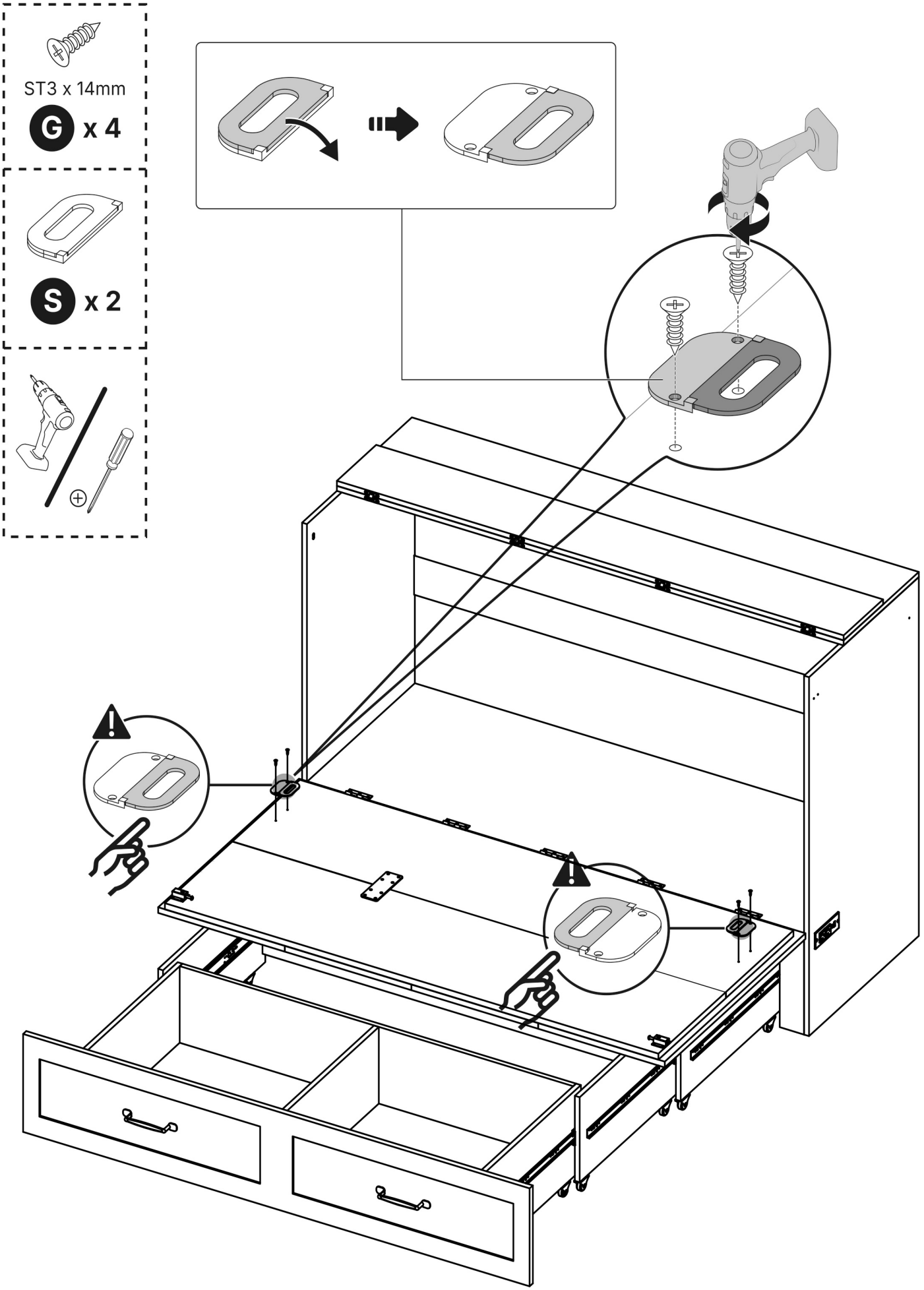
ST3 x 14mm
G x 4
S x 2

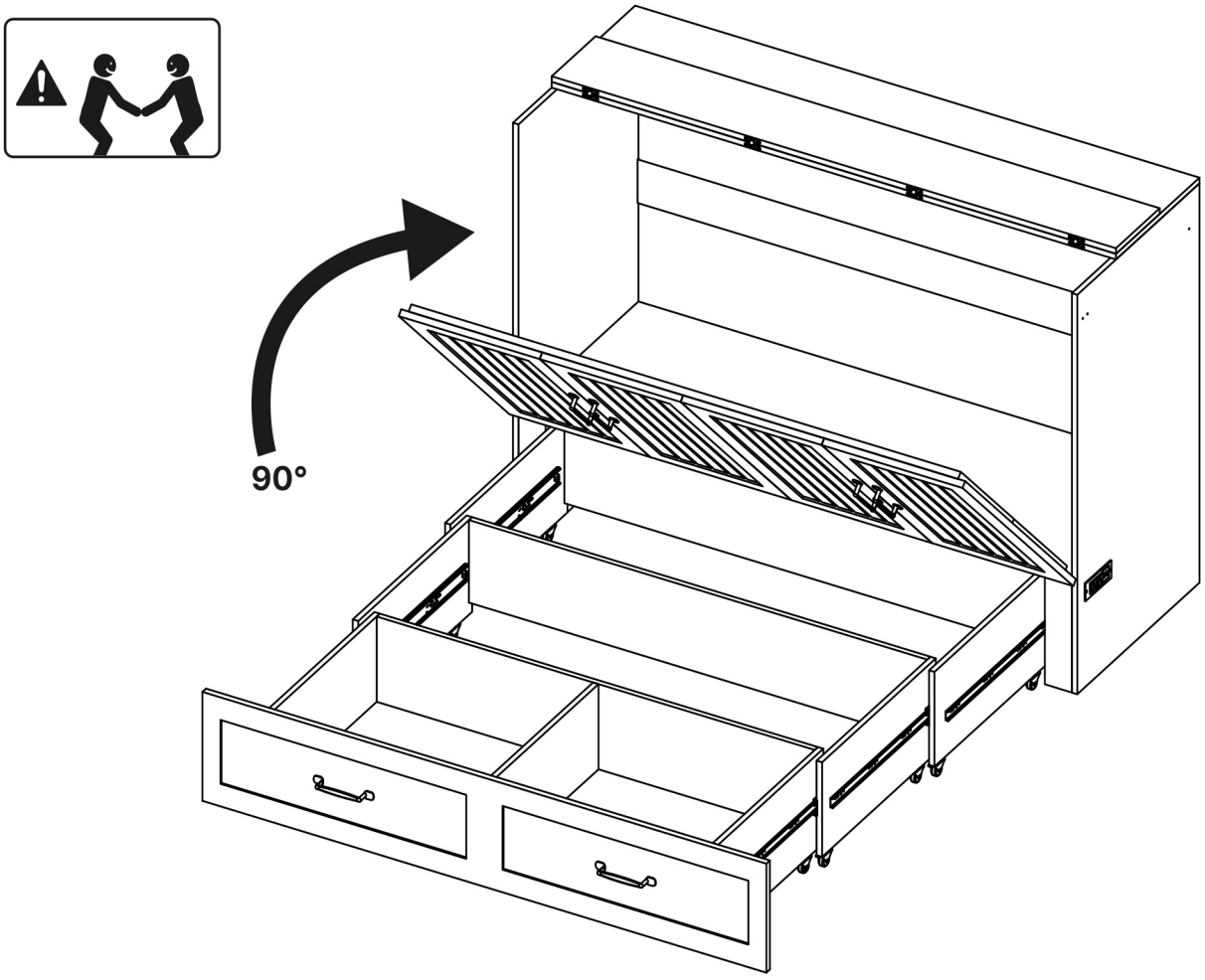

After closing the cabinet door, fully engage the latch to prevent accidental opening or injury.

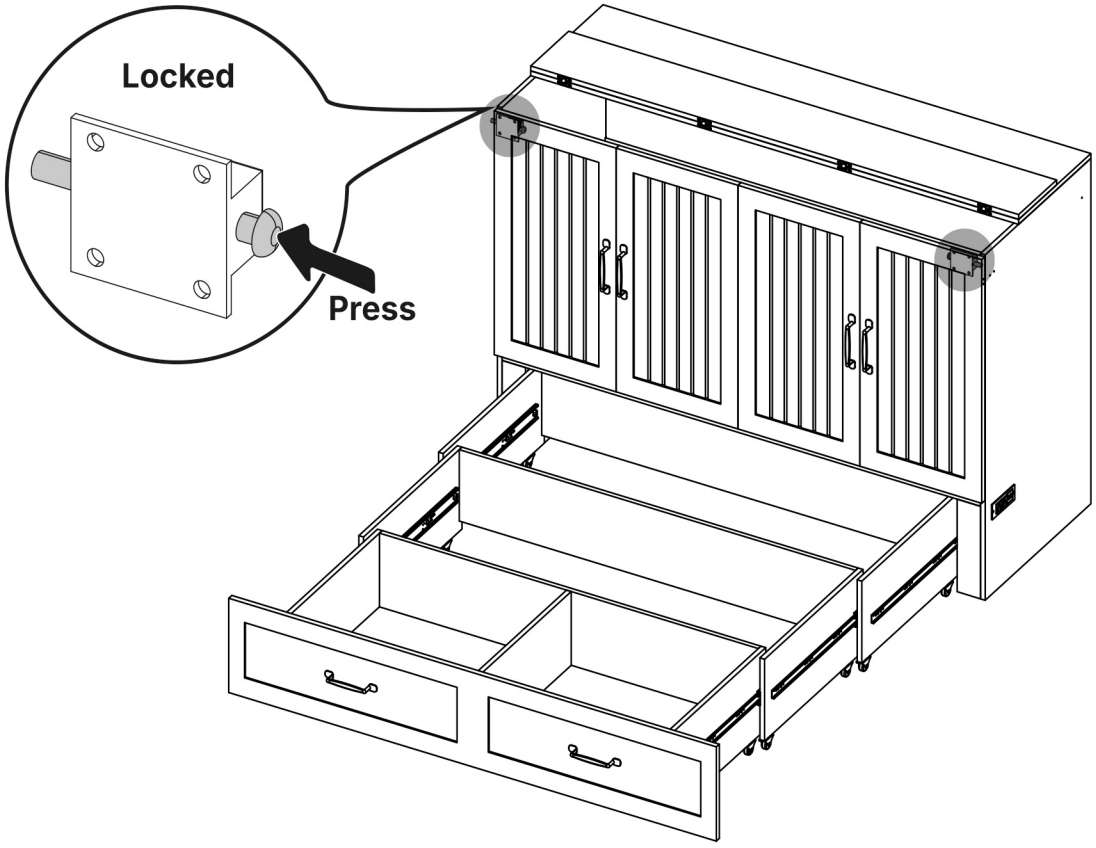

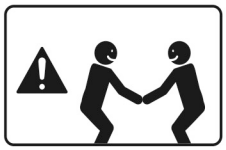

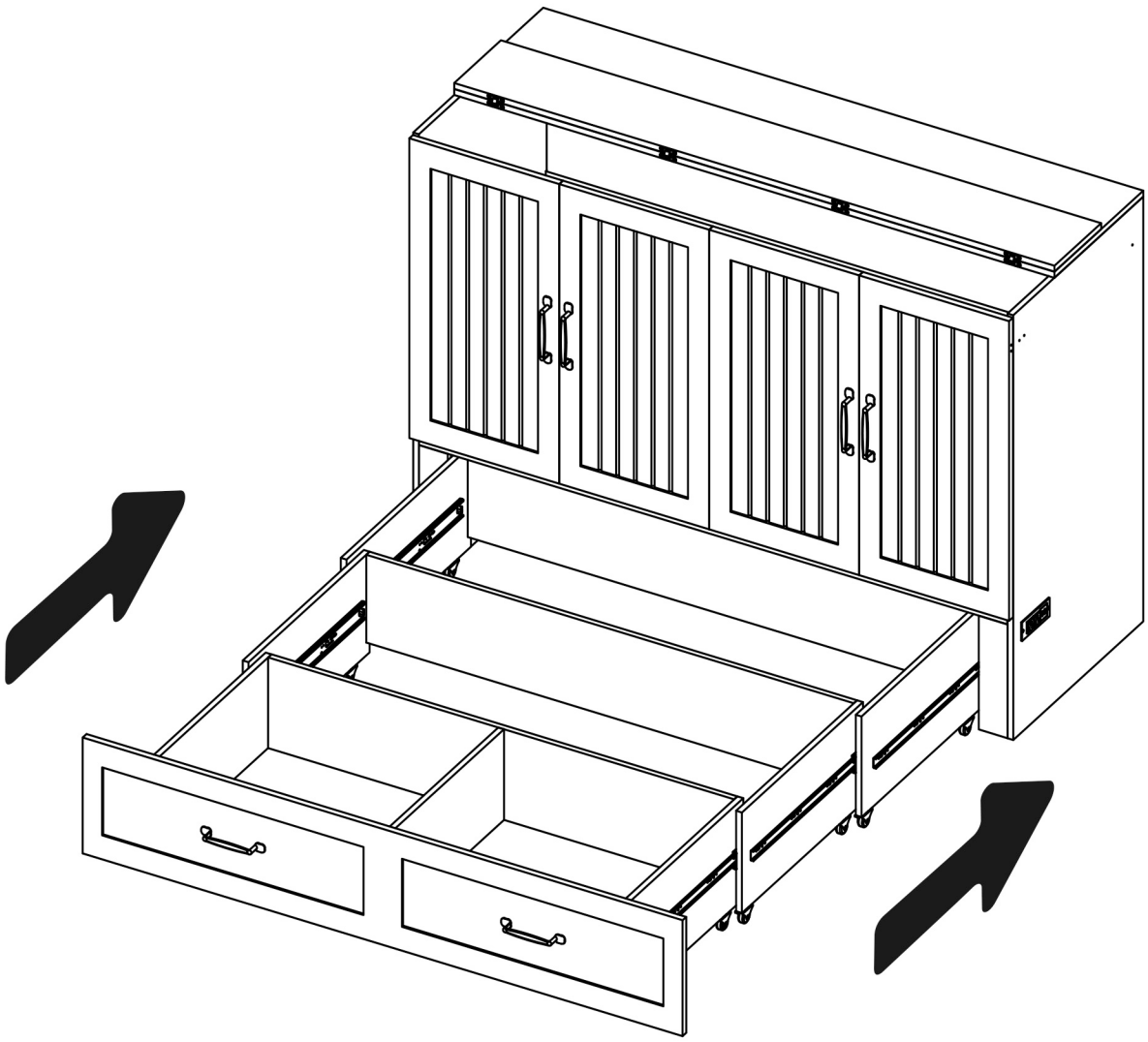

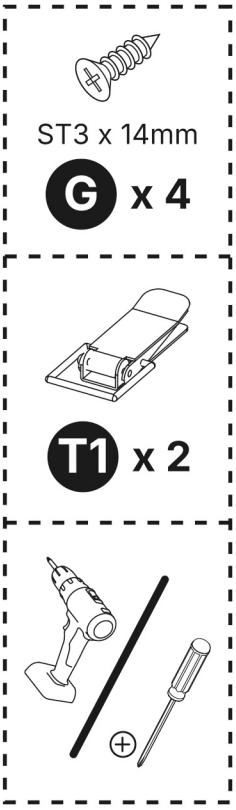
ST3 x 14mm
G x 4
T1 x 2

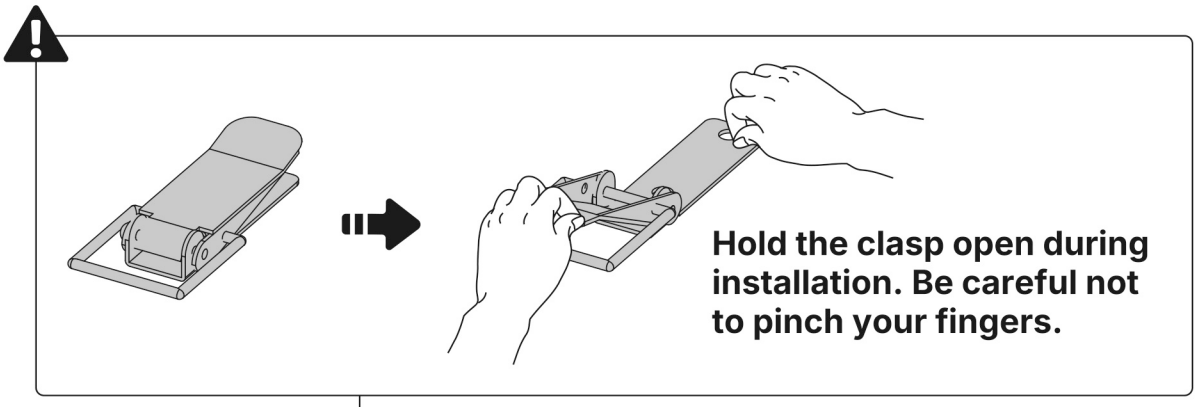
Hold the clasp open during installation. Be careful not to pinch your fingers.

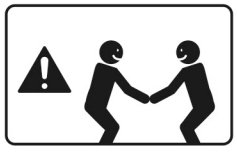

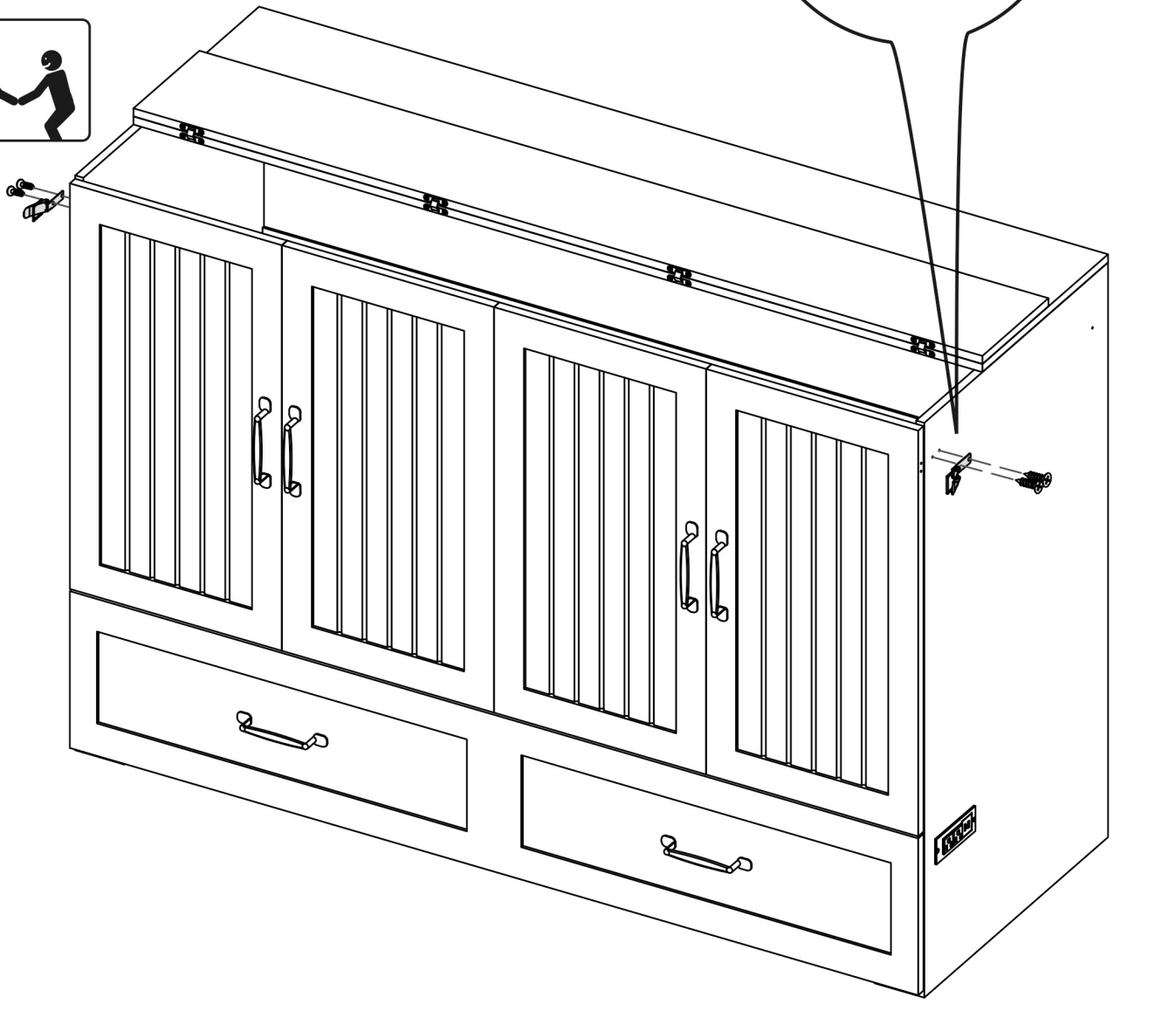


ST3 x 14mm
G x 4
T2 x 2

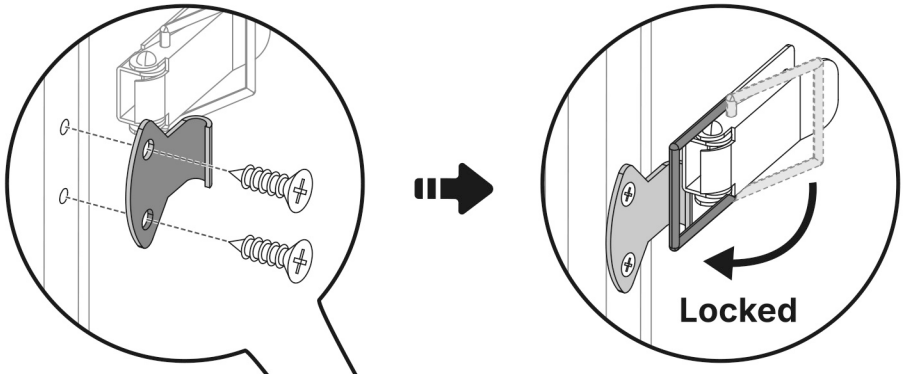
Locked

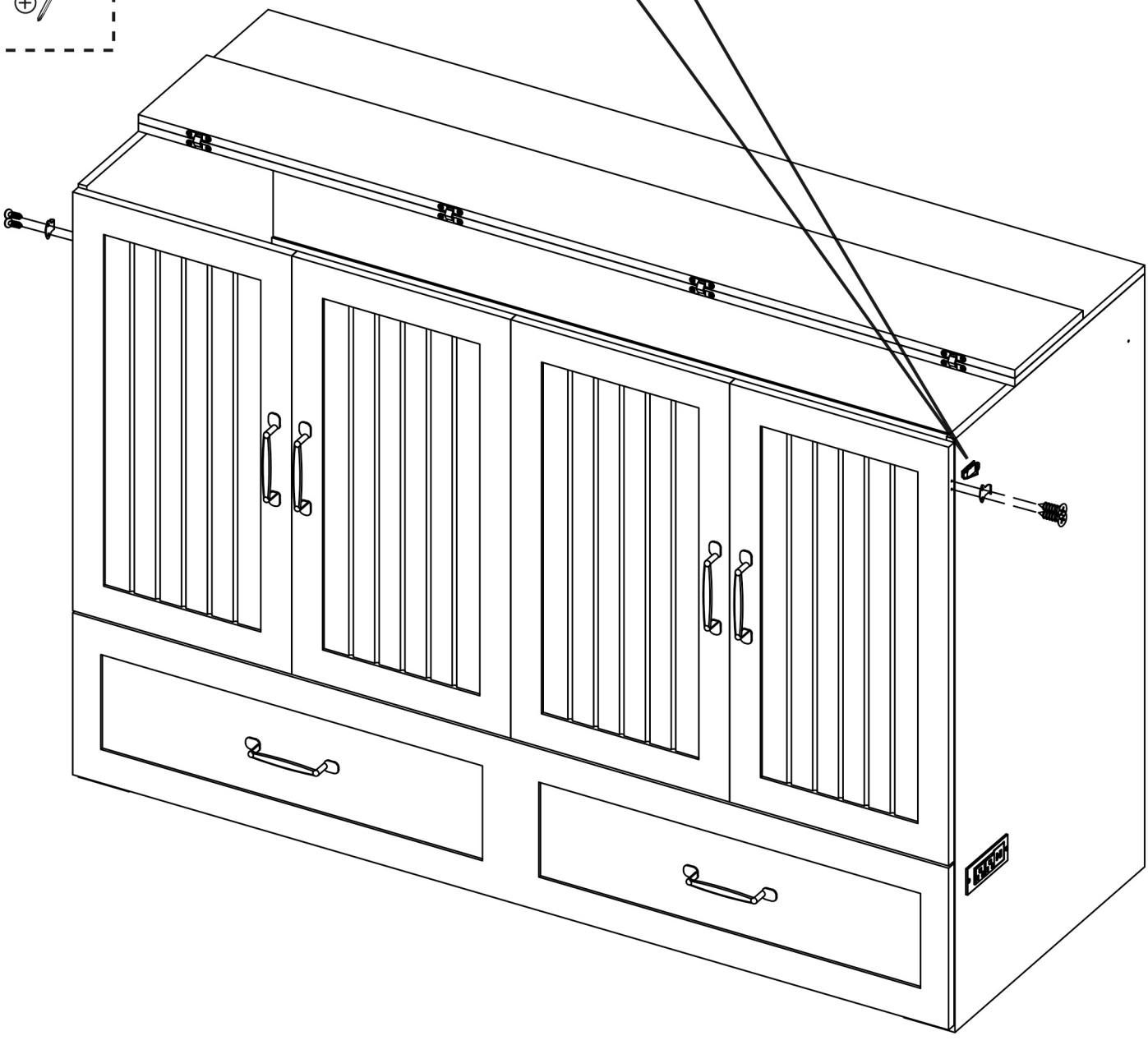

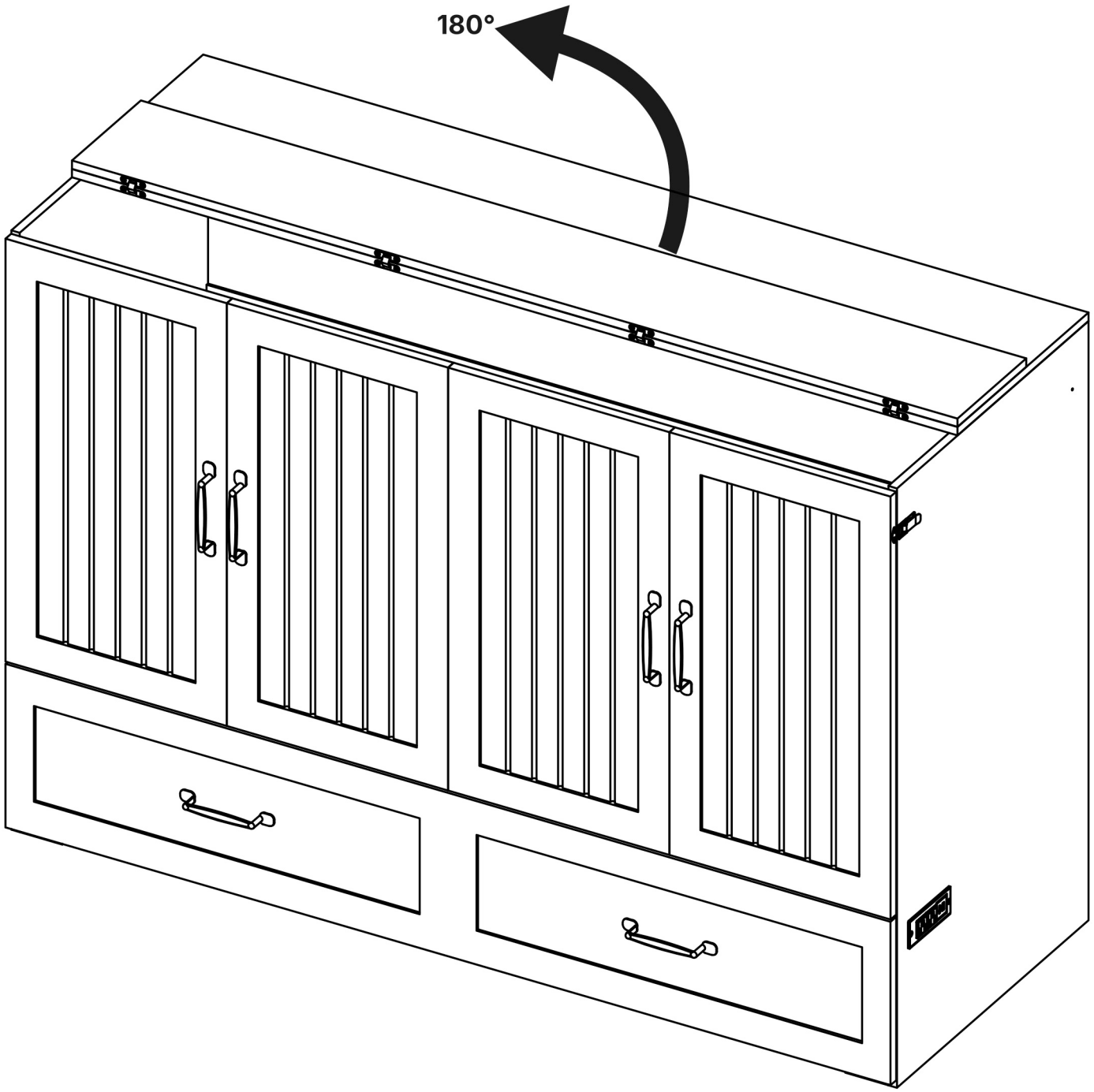
180°

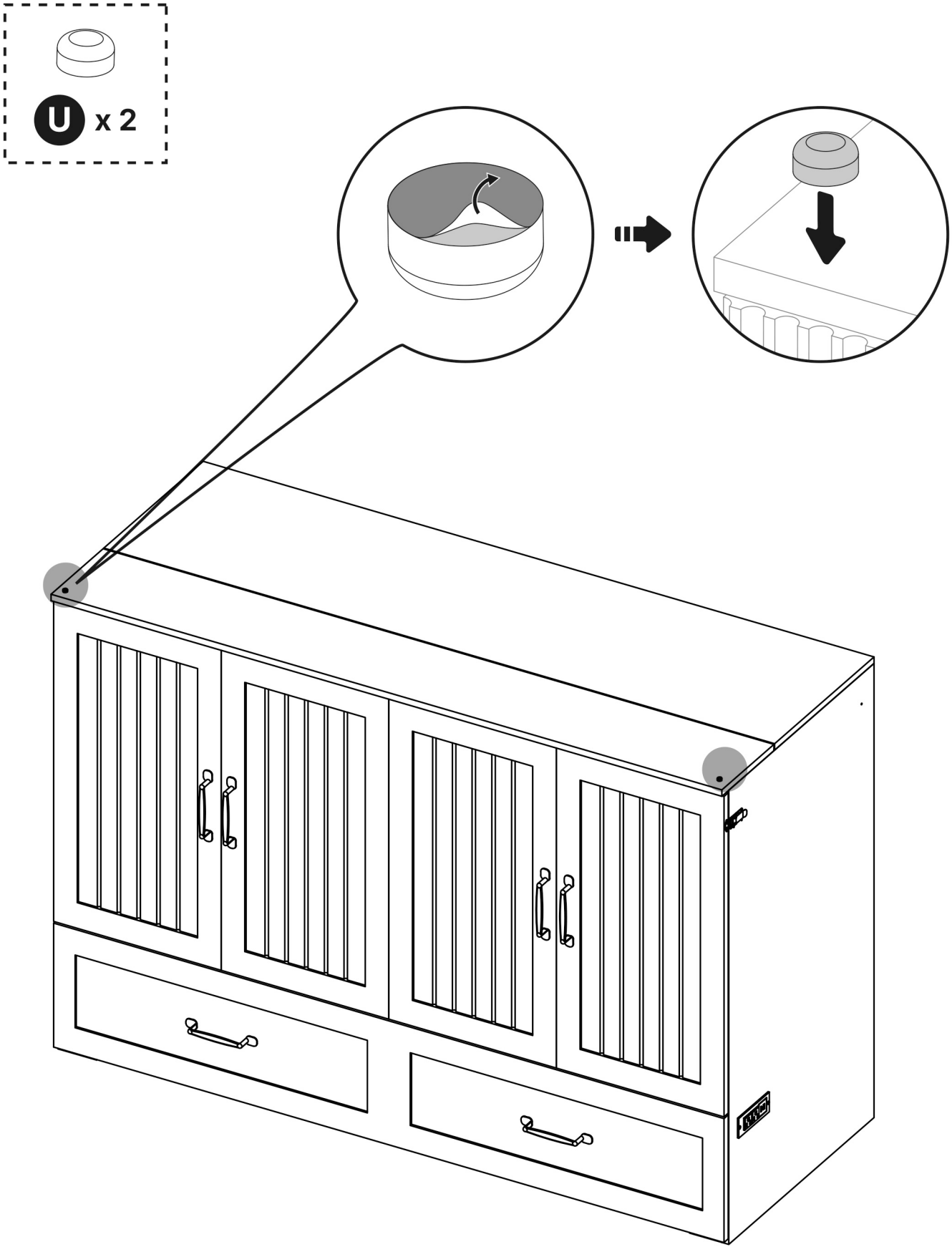
U x 2

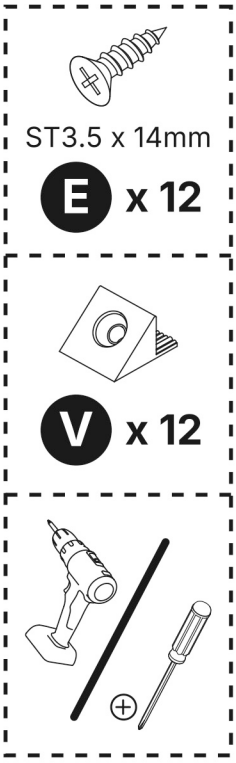
ST3.5 x 14mm
E x 12
V x 12

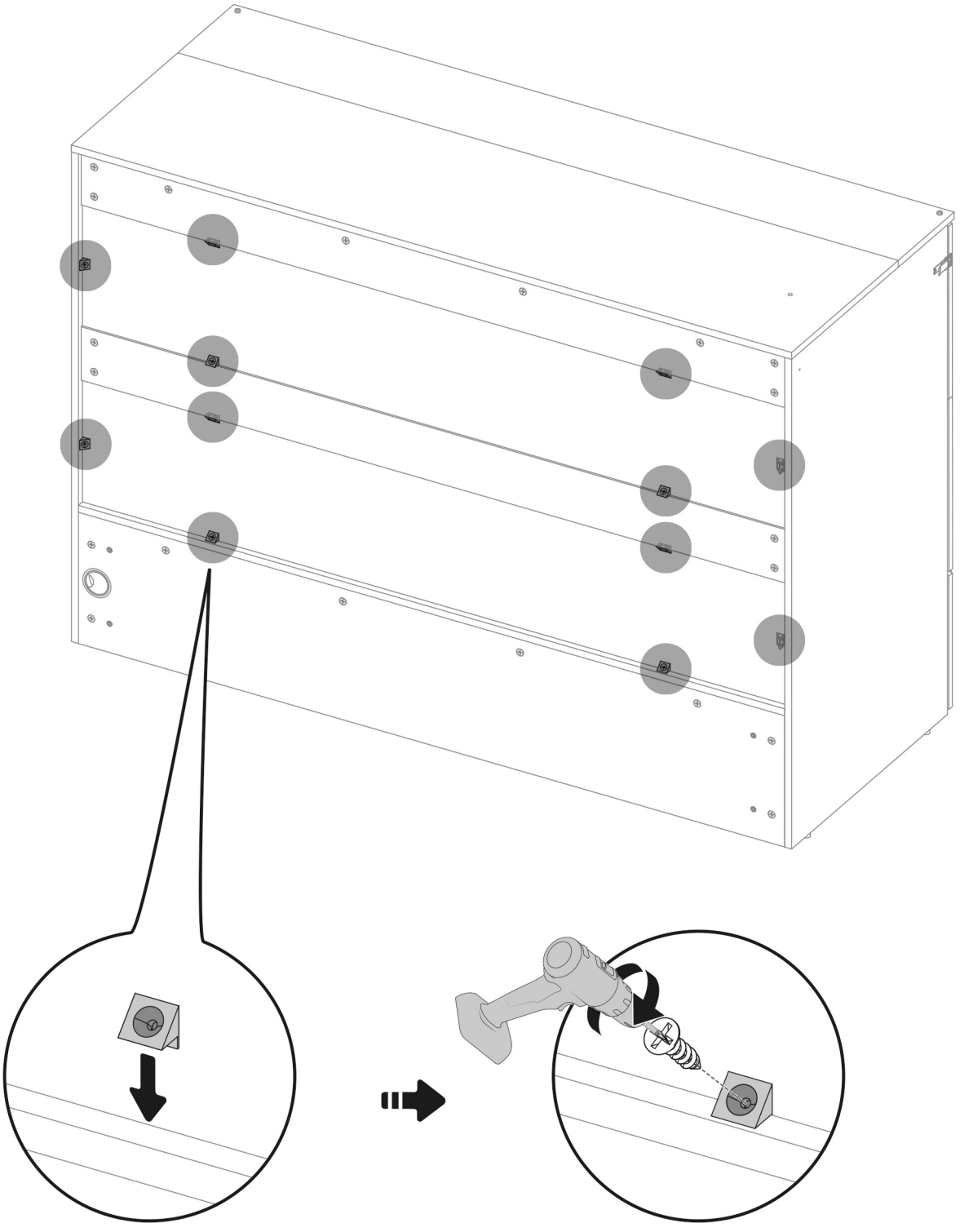

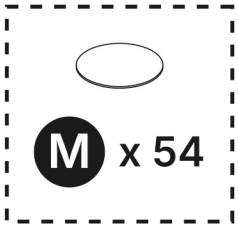
M x 54

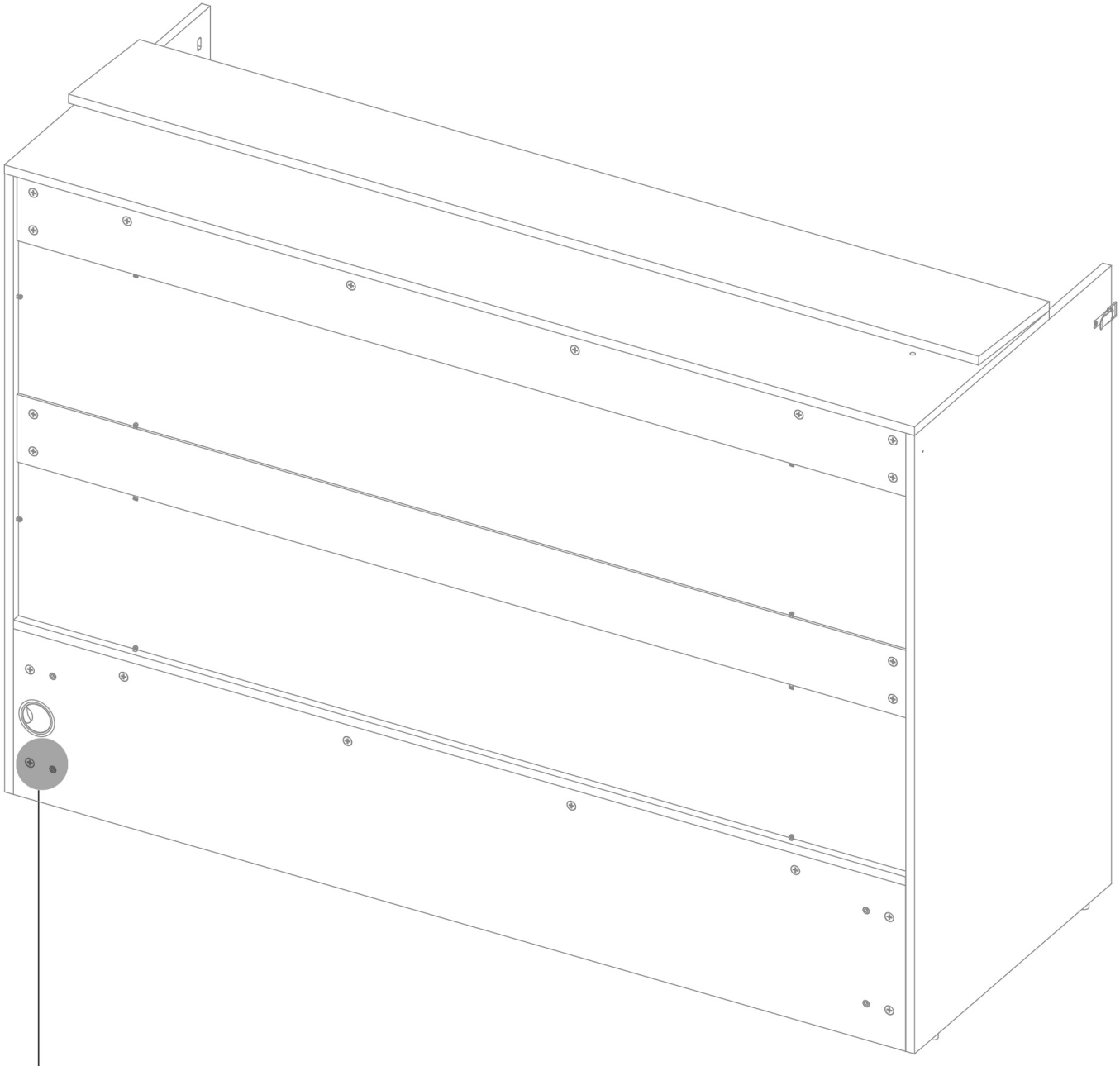


Apply stickers to the exposed bolt heads for a cleaner appearance.

3 Using the Anti-Tip Kit



ST5 x 14mm

H x 2

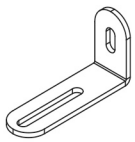

a x 2

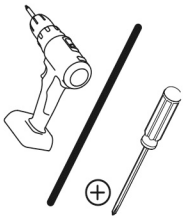

1. Secure the anti-tip brackets to both sides of the unit using short screws.

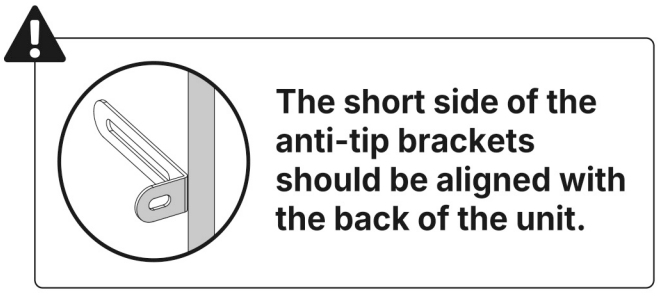

The short side of the anti-tip brackets should be aligned with the back of the unit.

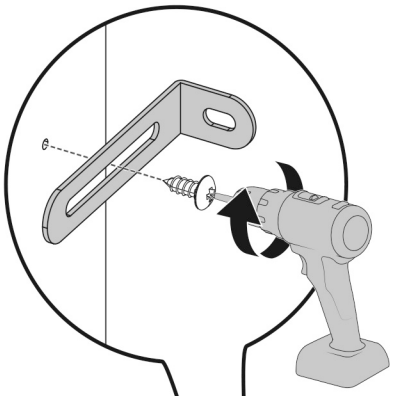

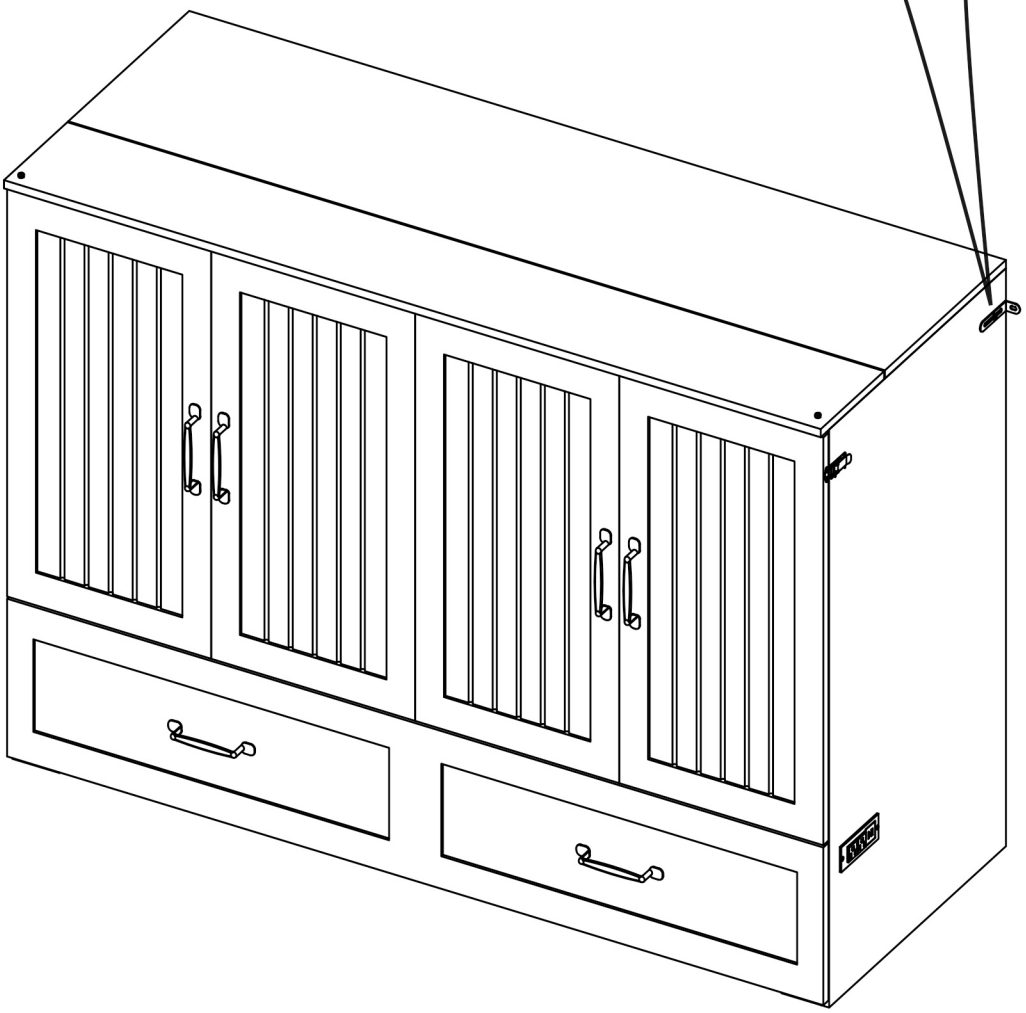

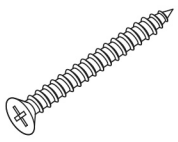

ST5 x 50mm

b x 2

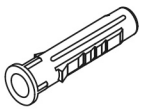

Ø8 x 36mm

c x 2

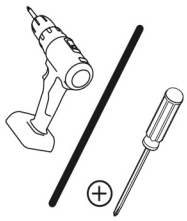

2. Determine where the unit is to be placed. If you have a wood stud wall, locate a stud using a stud finder and mark the centerline.

Drill pilot holes in the wall at the appropriate height.

Secure the anti-brackets to the wall using long screws. Use wall anchors for solid concrete. Do not use them on wood studs.

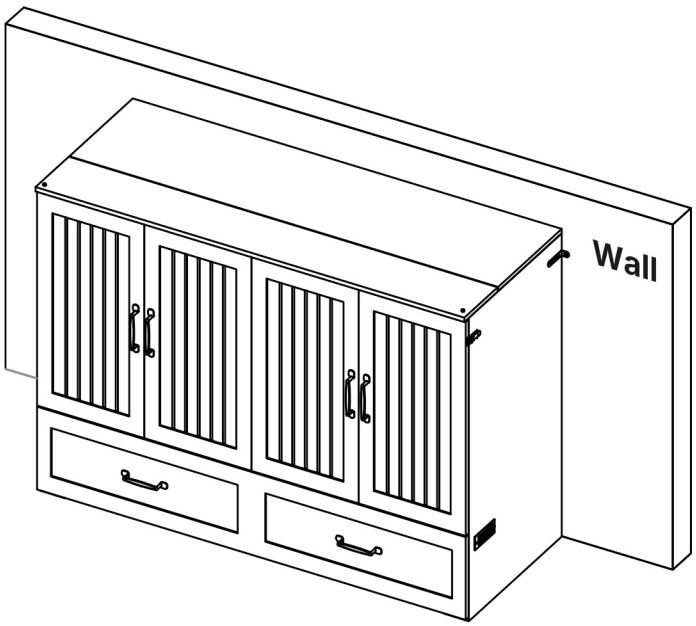

A. Wood Studs

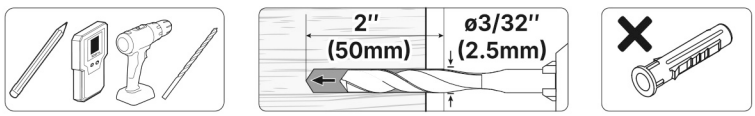

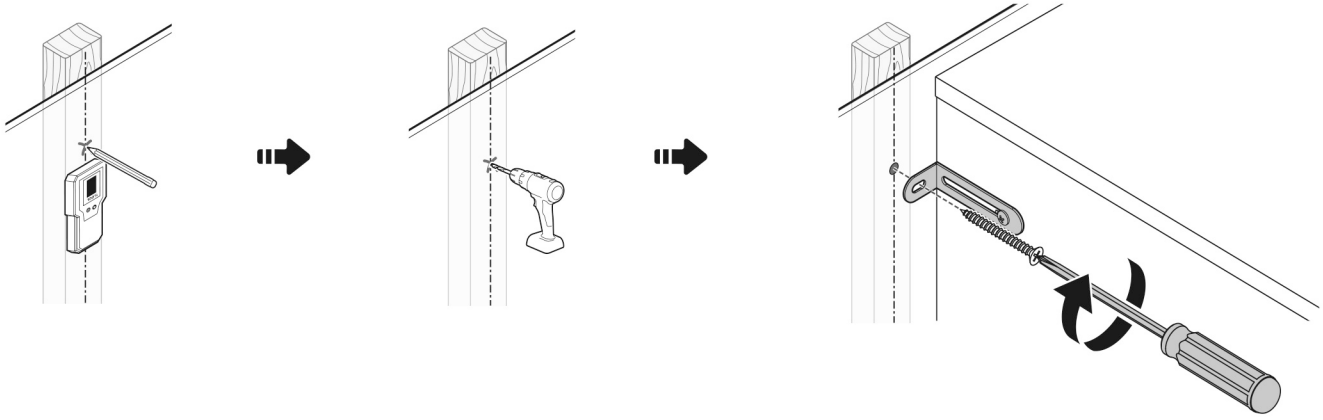

B. Solid Concrete

