SKU:NYX08-230

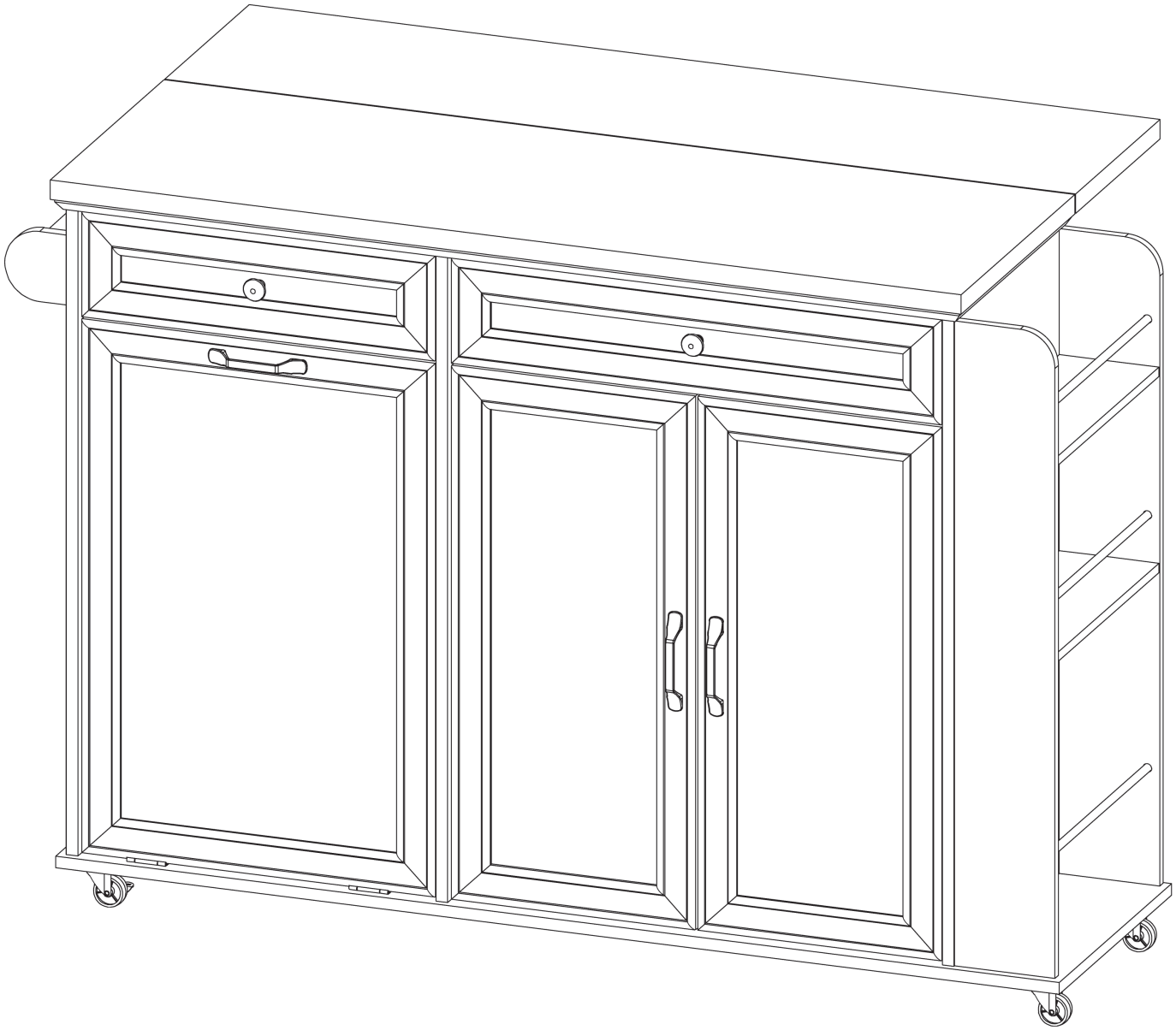

As this item contains many parts, please read the installation instruction carefully before installation . Please use tools properly and carefully.

Before You Start

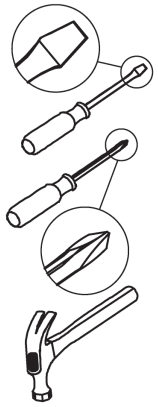

- Read through each step carefully and follow the proper order
- Separate and count all your parts and hardware
- Give yourself enough room for the assembly process
- Have the following tools: Flat Head Screwdriver, #2 Phillips Head Screwdriver and Hammer
- Caution: If using a power drill or power screwdriver for screwing, please be aware of to slow down and stop when screw is tight. Failure to do so may result in stripping the screw. （Assembly speed can be increased by using electric screwdriver）

Helpful Hints

PEOPLE NEEDED FOR ASSEMBLY: **1-2**

- Open your item in the area you plan to keep it to avoid excessive heavy lifting.



- Identify, sort and count the parts before attempting assembly.



- Compression dowels are lightly tapped in with a hammer.



- Slides are labeled with an **R** (right) and **L** (left) for proper placement.



- Make sure to always face the point on the top of the Cam Lock towards the outer edge.



- If there is a back panel in the package, please install it to make sure your unit is complete and sturdy.

-Please fix all the screws provided for the back panel which can enhance product stability. If it is difficult to fix it when tightening, it can be fixed with the help of a hammer and then tightened.



- Do NOT use harsh chemicals or abrasive cleaners on this item.

- Never push, pull, or drag your furniture.

Board Identification

Not actual size

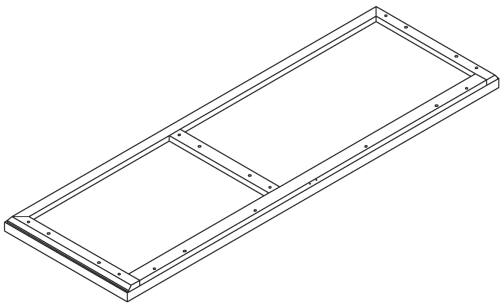

A
TOP
Qty:1

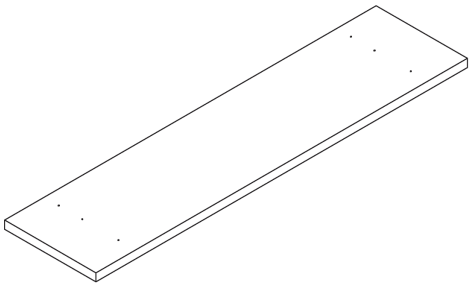

B
DROP-LEAF TABLE FLAP
Qty:1

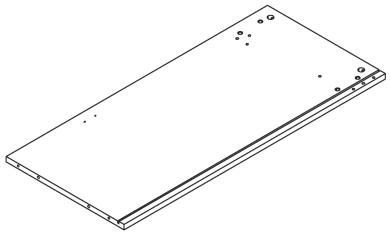

C
LEFT SIDE PANEL
Qty:1

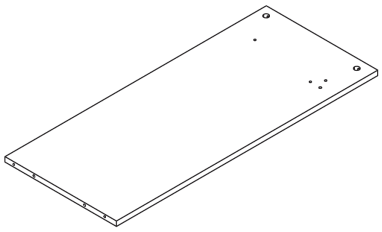

D
PARTITION
Qty:1

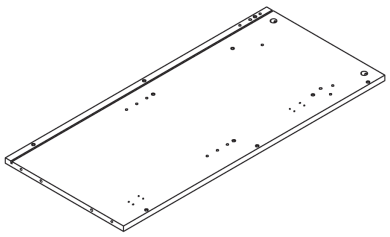

E
RIGHT SIDE PANEL
Qty:1

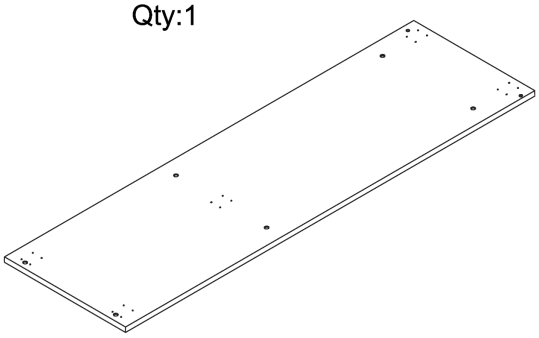

F
BOTTOM
Qty:1

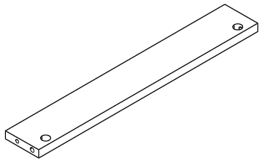

G
LEFT CROSS RAIL
Qty:1

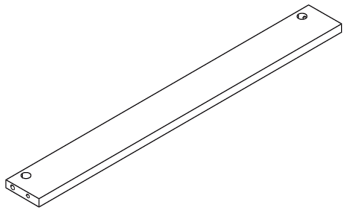

H
RIGHT CROSS RAIL
Qty:1

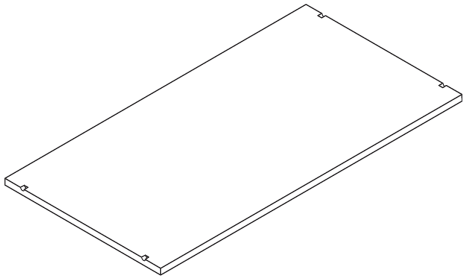

I
ADJUSTABLE SHELF
Qty:1

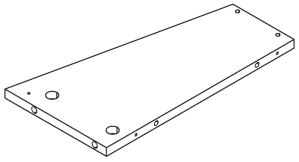

J
INNER LEFT SIDE PANEL
Qty:1

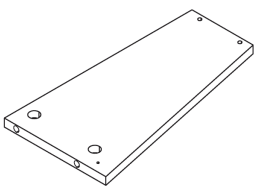

K
INNER RIGHT SIDE PANEL
Qty:1

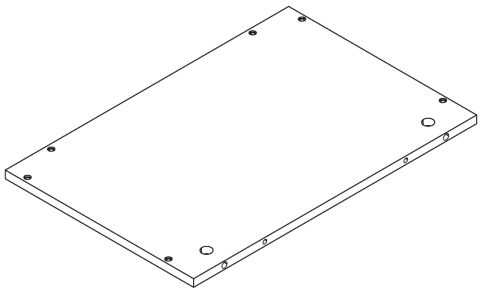

L
INNER BOTTOM
Qty:1

Board Identification

Not actual size

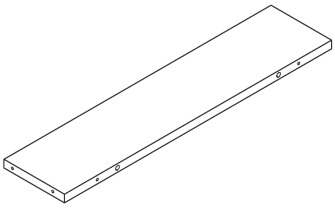

M
INNER BACK PANEL
Qty:1

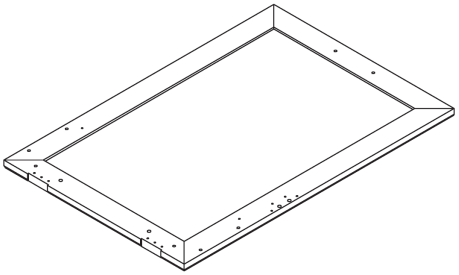

N
FLAP
Qty:1

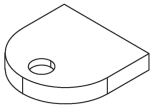

O
HANDLE SIDE PANEL
Qty:2

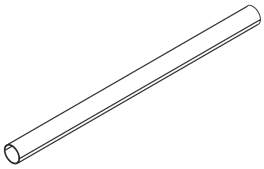

P
ROUND TUBE
Qty:1

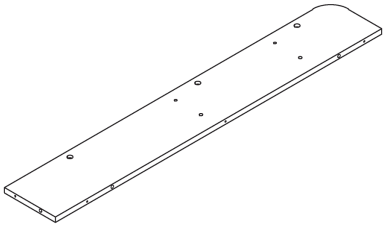

Q
LEFT SIDE PANEL
Qty:1

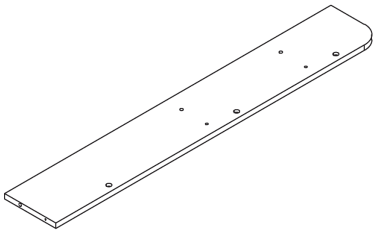

R
RIGHT SIDE PANEL
Qty:1

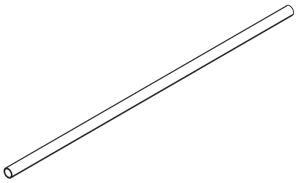

S
ROUND TUBE
Qty:3

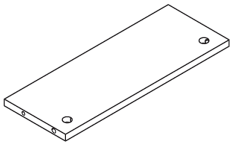

T
FIXED SHELF
Qty:2

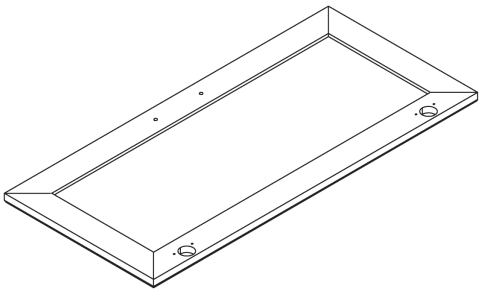

U
DOOR
Qty:2

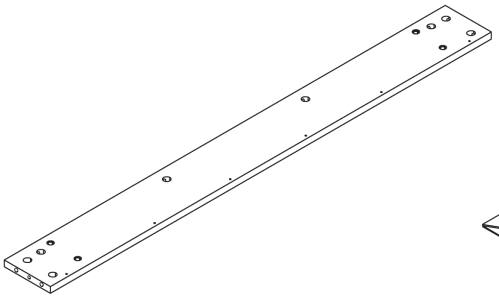

V
BACK RAIL
Qty:1

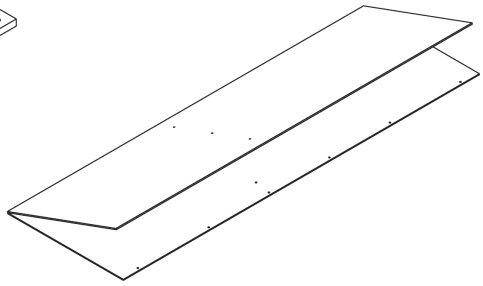

W
BACK PANEL
Qty:1

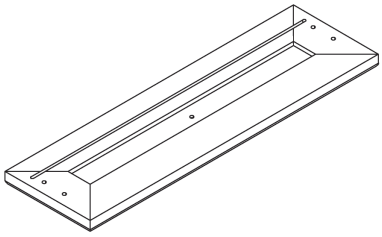

X
LEFT DRAWER FRONT
Qty:1

Board Identification

Not actual size

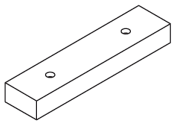

Y

SUPPORT BLOCK
Qty:1

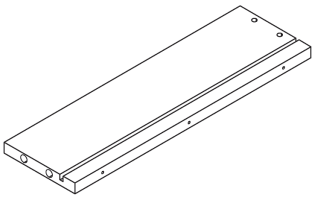

Z

LEFT DRAWER SIDE
Qty:2

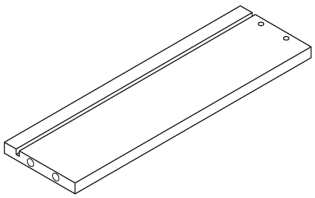

AA

RIGHT DRAWER SIDE
Qty:2

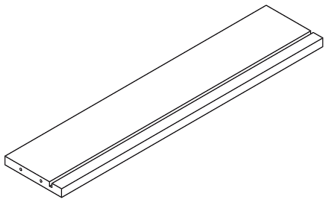

BB

LEFT DRAWER BACK
Qty:1

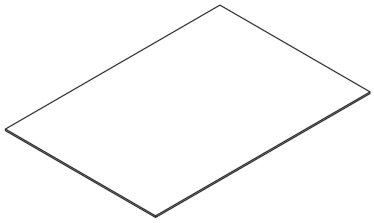

CC

LEFT DRAWER BOTTOM
Qty:1

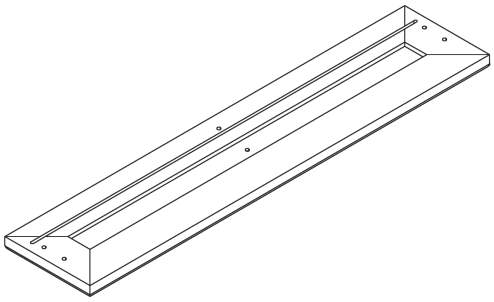

DD

RIGHT DRAWER FRONT
Qty:1

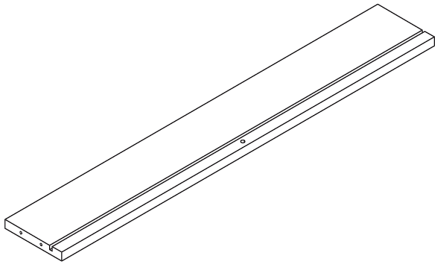

EE

RIGHT DRAWER BACK
Qty:1

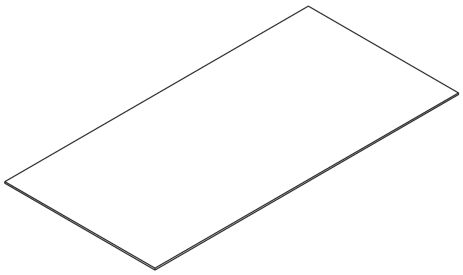

FF

RIGHT DRAWER BOTTOM
Qty:1

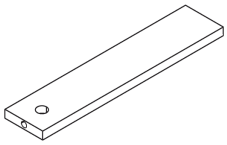

GG

DRAWER BOTTOM SUPPORT RAIL
Qty:1

Part List

Not actual size

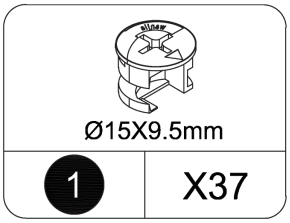

CAM LOCK
spare:1

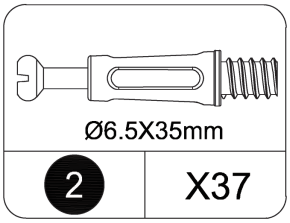

CAM BOLT
spare:1

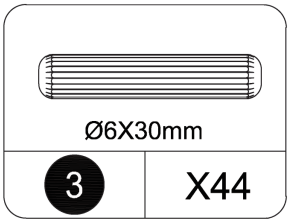

WOODEN DOWEL
spare:3

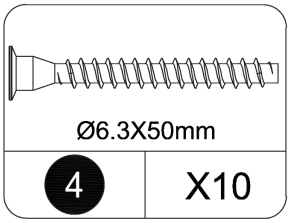

SCREW
spare:1

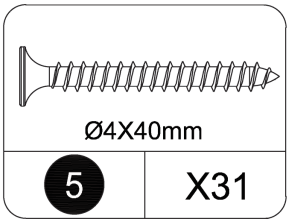

SCREW
spare:1

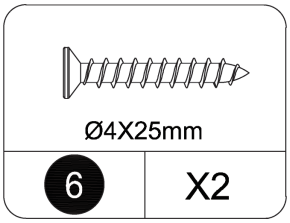

SCREW
spare:1

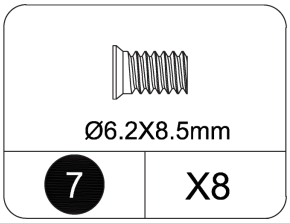

SCREW
spare:1

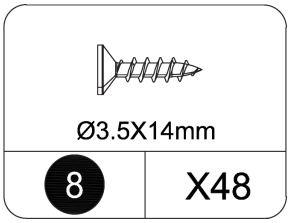

SCREW
spare:2

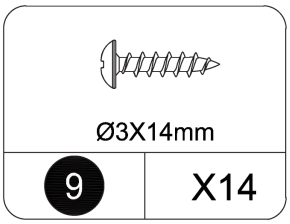

SCREW
spare:1

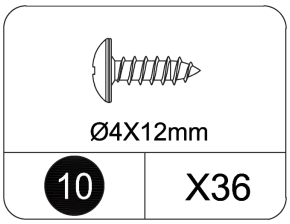

SCREW
spare:2

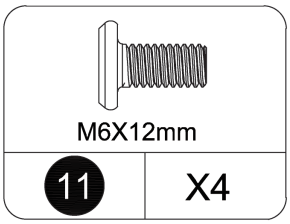

BOLT
spare:1

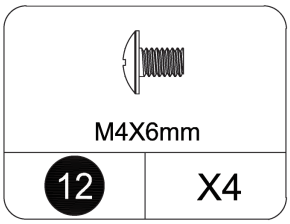

SCREW
spare:1

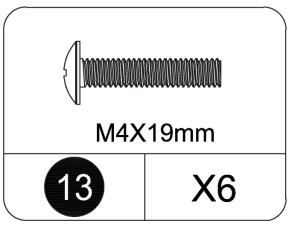

SCREW
spare:1

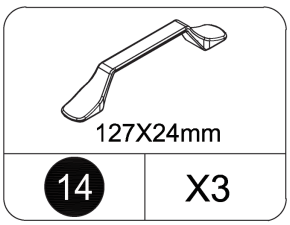

HANDLE

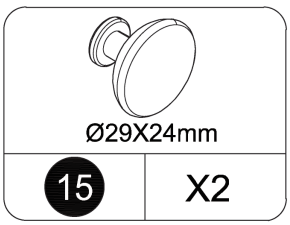

HANDLE

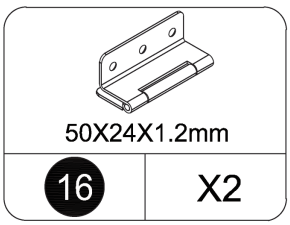

HINGLE

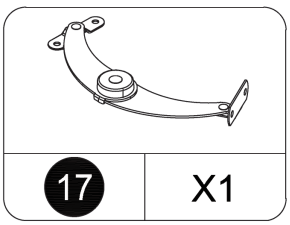

LEFT HINGE

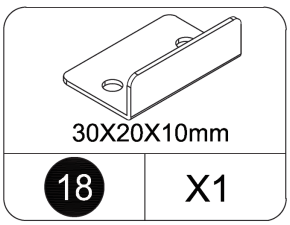

STOPPER

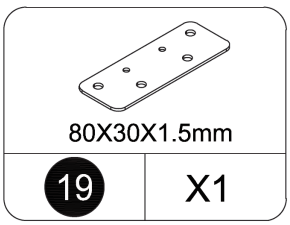

FLAT IRON SHEET

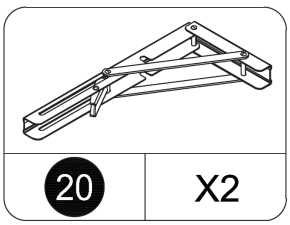

FOLDING SUPPORT

Part List

Not actual size

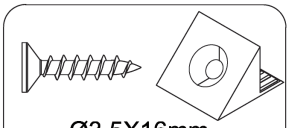

21 X10

BACKBOARD BUCKLE



22 X1

HEX KEY

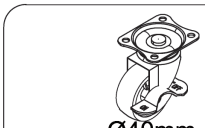

23 X2

CASTER WTH LOCK



24 X3

CASTER



25 X2

L -SHAPED IRON



26 X4

SHELF SUPPORT
spare:1

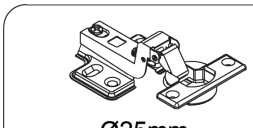

27 X4

HINGE

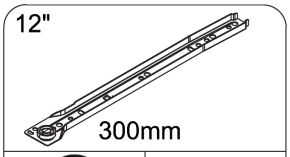

CL X2

LEFT CABINET MEMBER

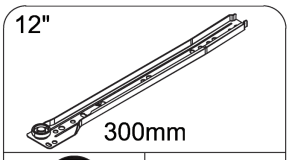

CR X2

RIGHT CABINET MEMBER

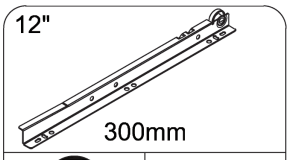

DL X2

LEFT DRAWER RUNNER

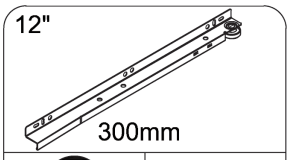

DR X2

RIGHT DRAWER RUNNER

Cam Lock Fastening System

Insert the cam bolt into the hole first, then insert the cam lock and lock it.

1

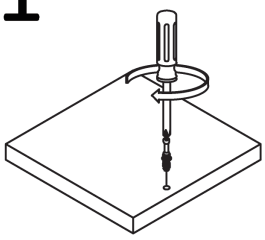

2

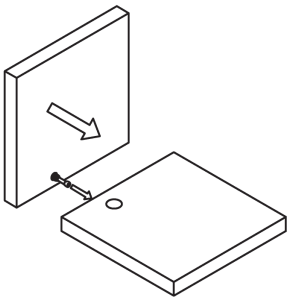

3

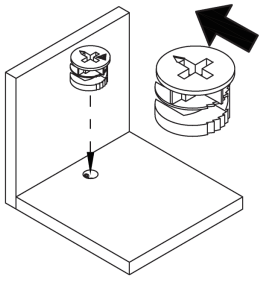

The opening must point toward the edge of the board

4

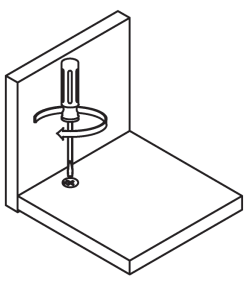

Board Identification

Not actual size

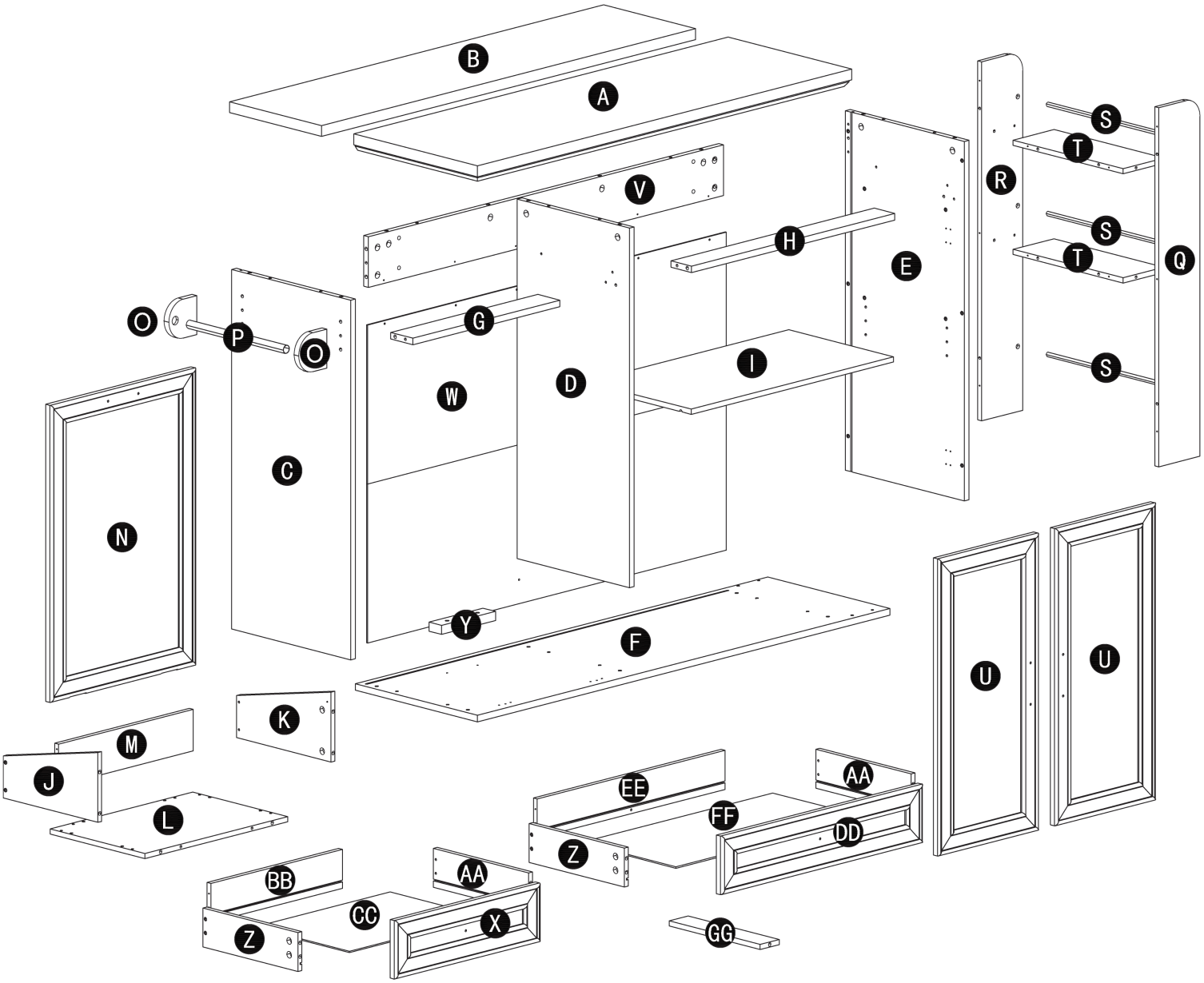

STEP1

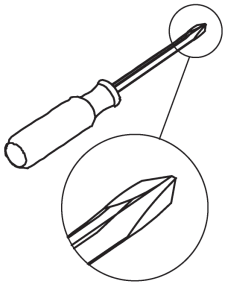

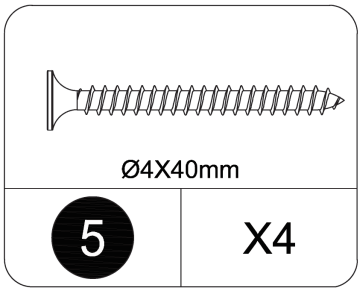

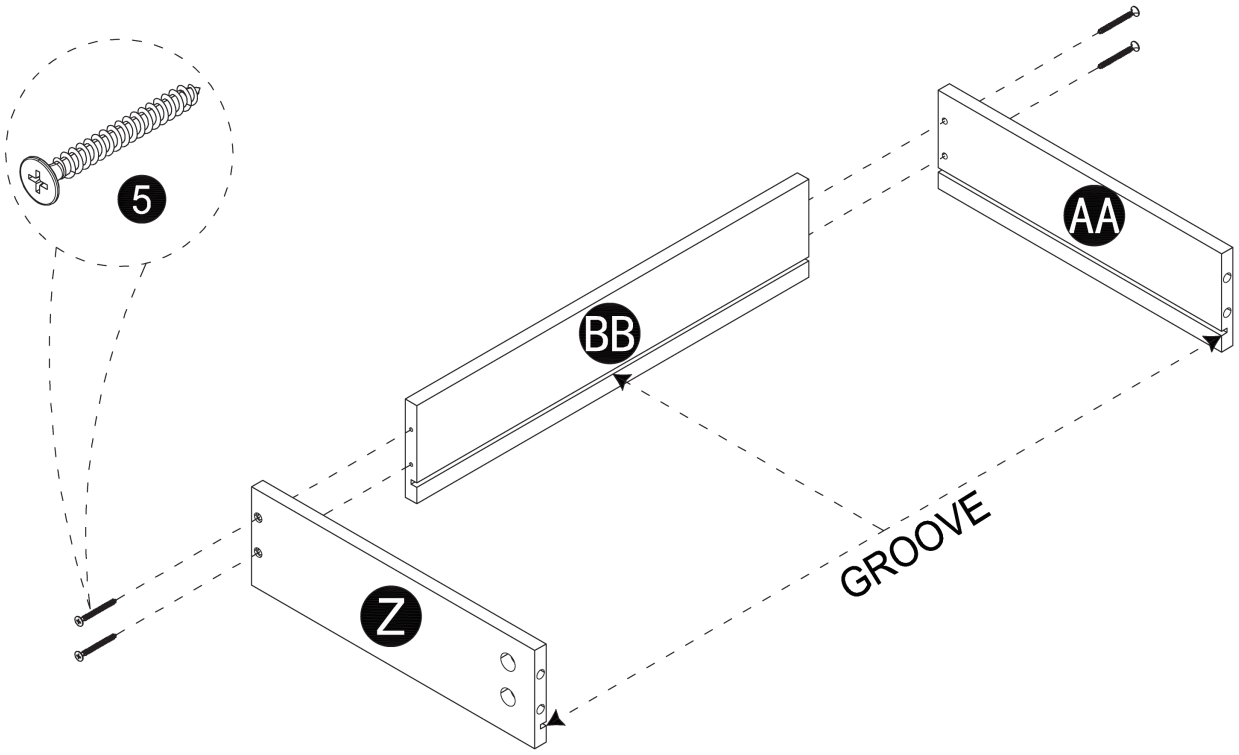

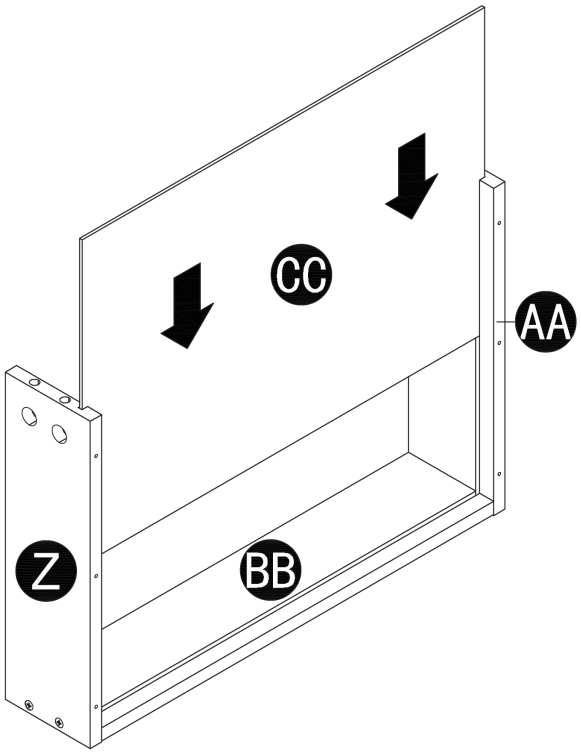

STEP2

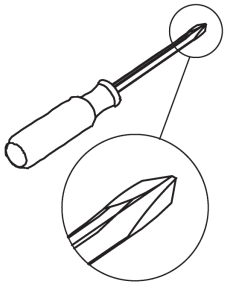

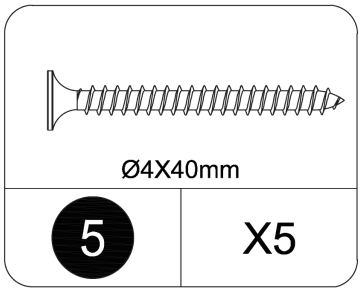

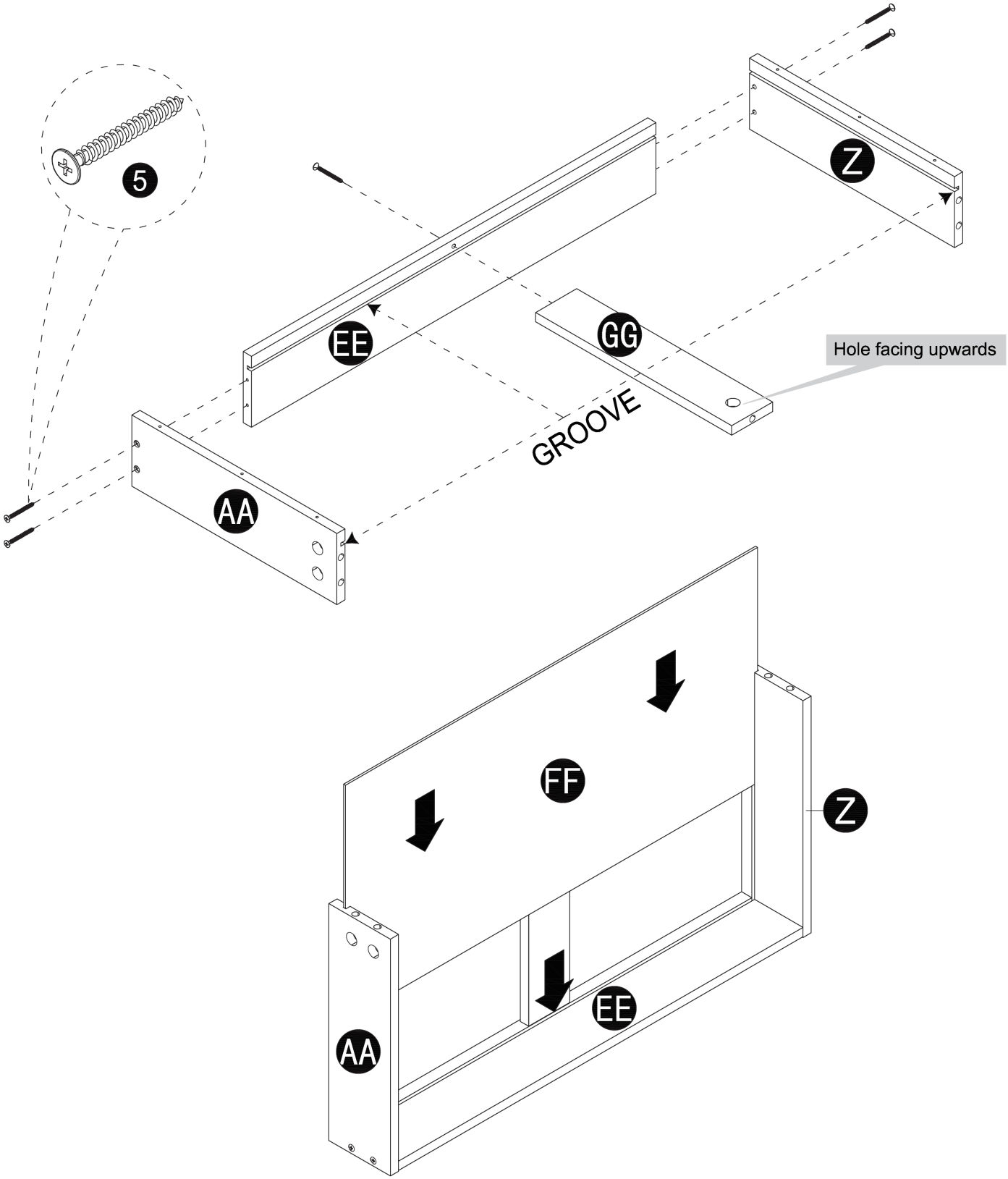

STEP3

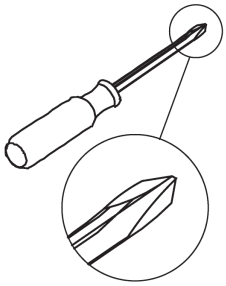

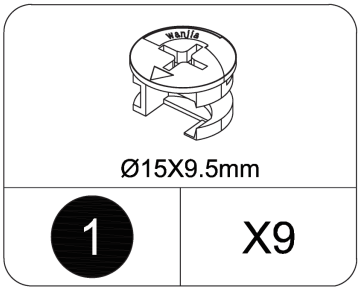

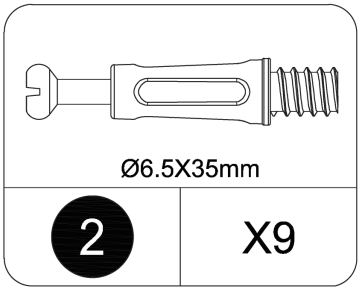

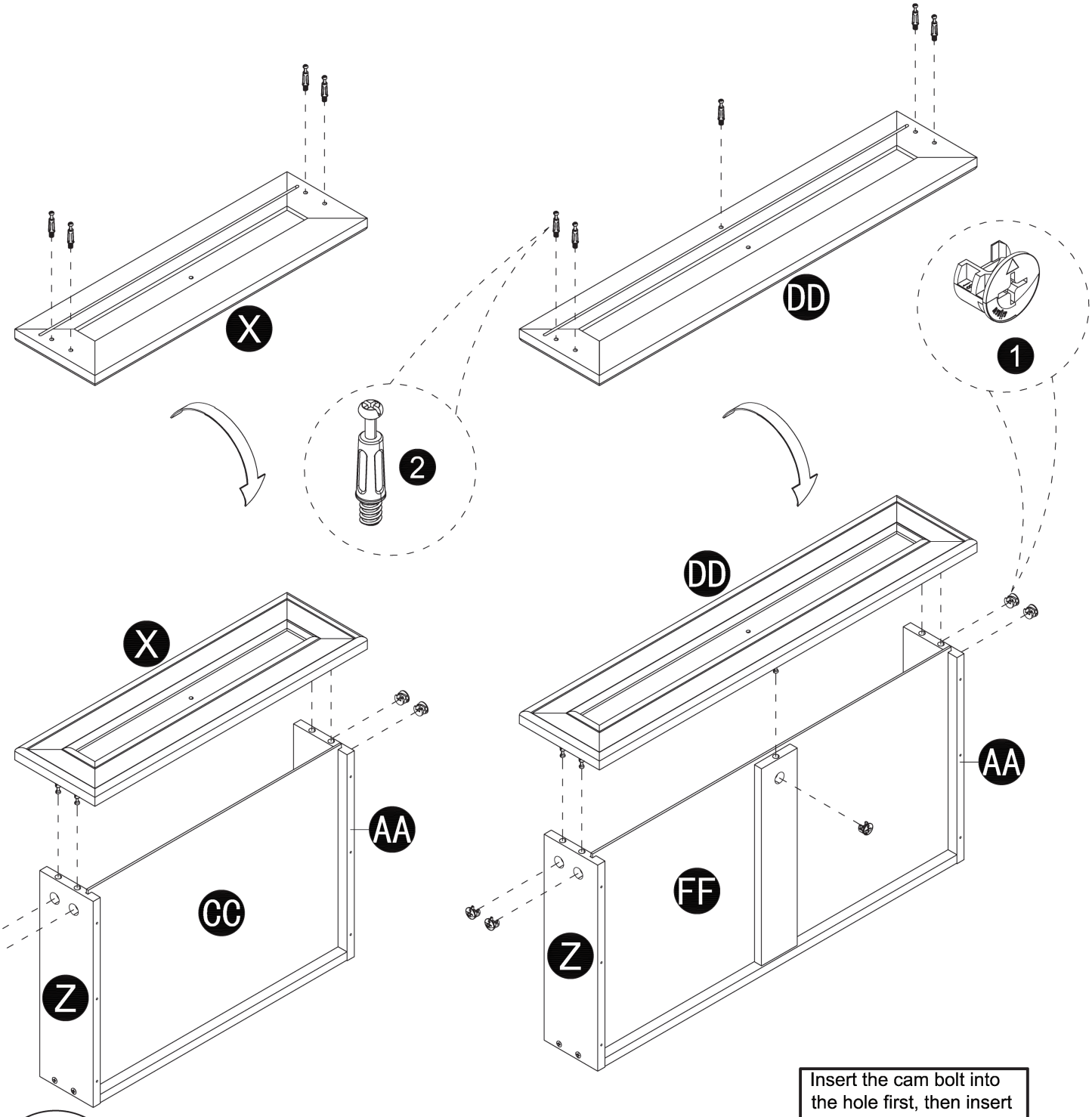

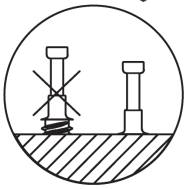

Insert the cam bolt into the hole first, then insert the cam lock and lock it.

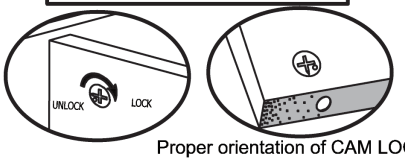

Proper orientation of CAM LOCK

STEP4

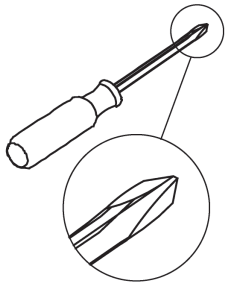

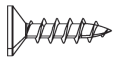

Ø3.5X14mm

8 X6

12"

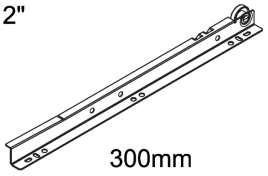

300mm

DL X1

12"

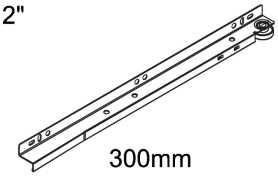

300mm

DR X1

Note the DL or DR stamped label on the slider!

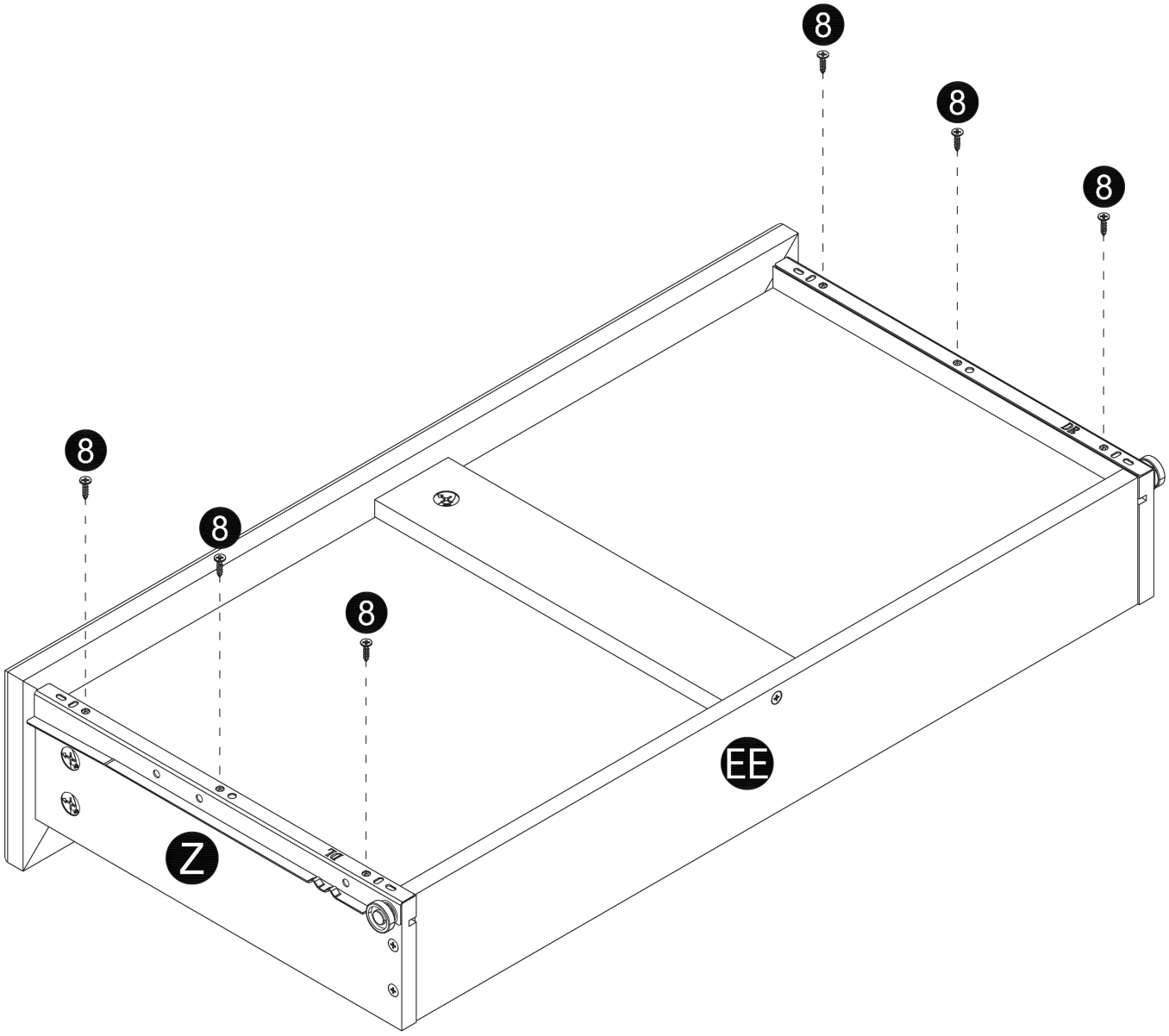

STEP5

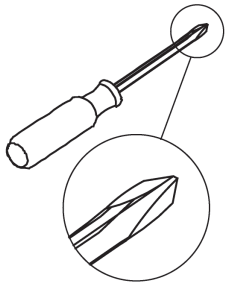

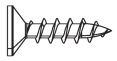

Ø3.5X14mm

8 X6

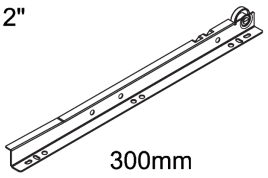

12"

300mm

DL X1

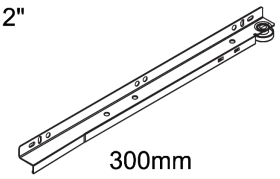

12"

300mm

DR X1

Note the DL or DR stamped label on the slider!

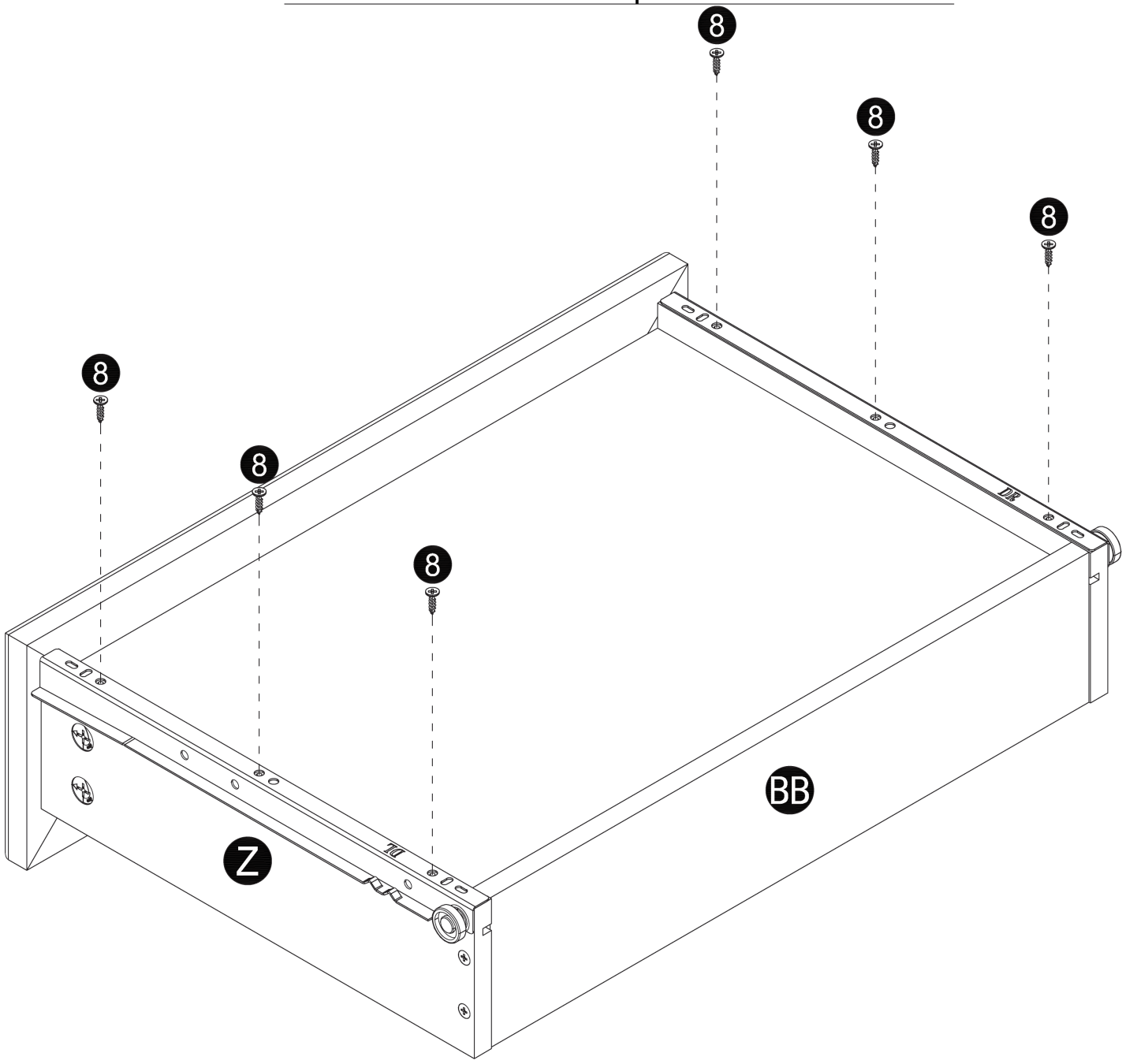

STEP6

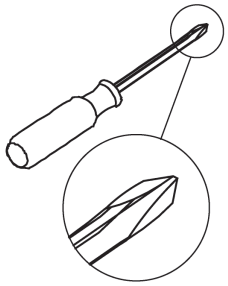

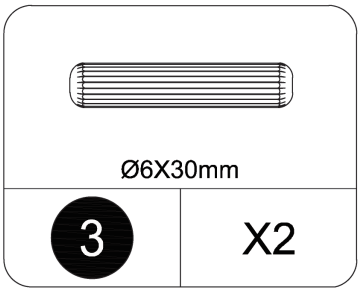

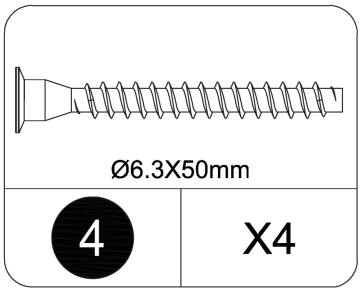

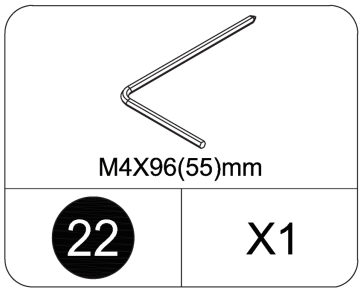

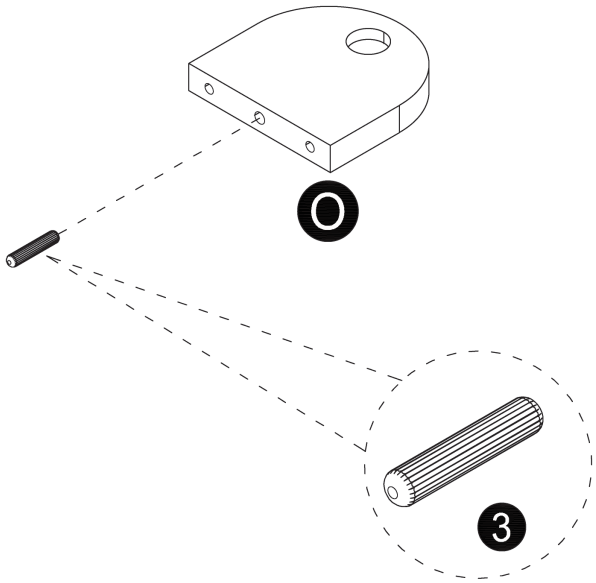

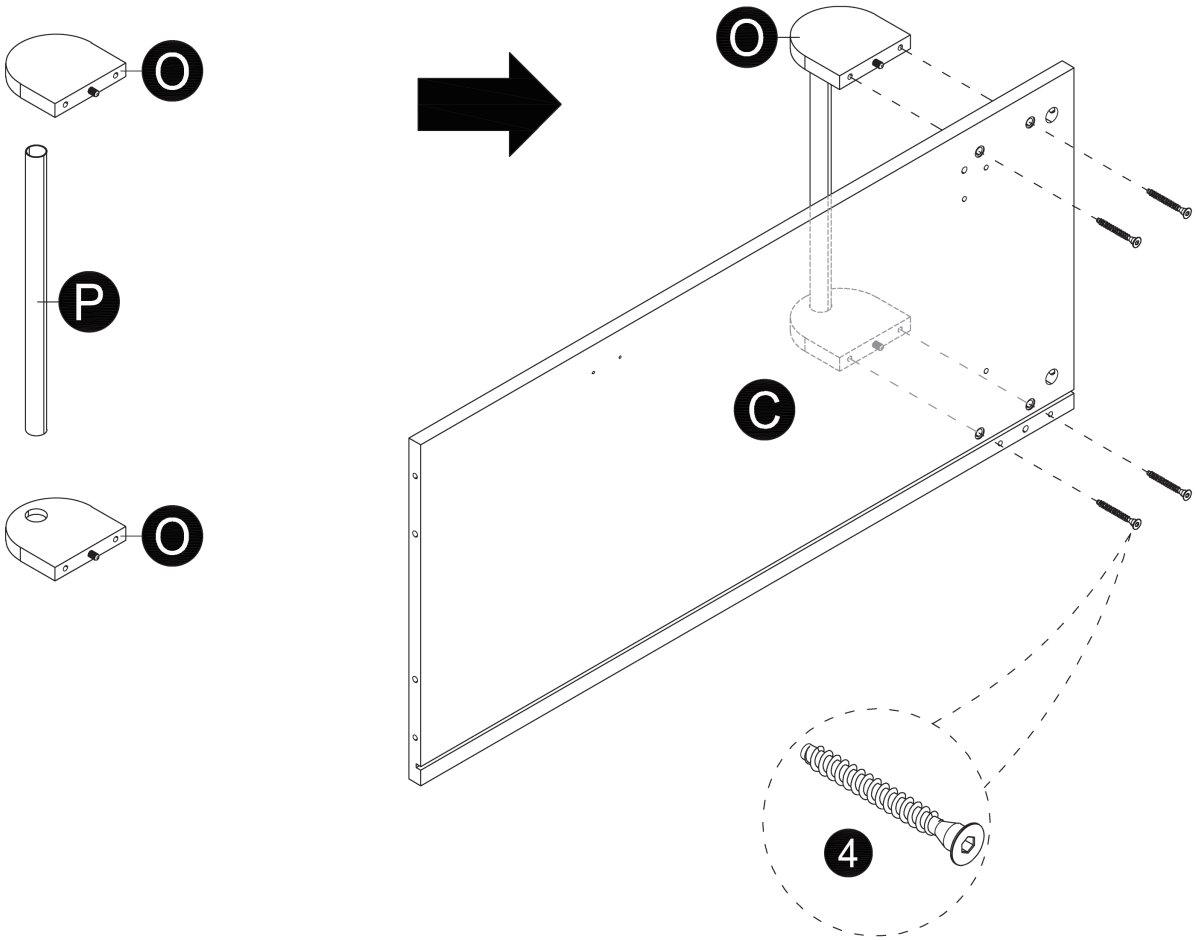

STEP7

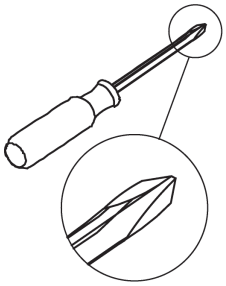

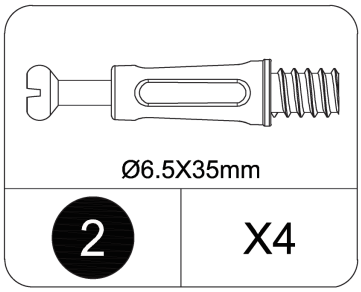

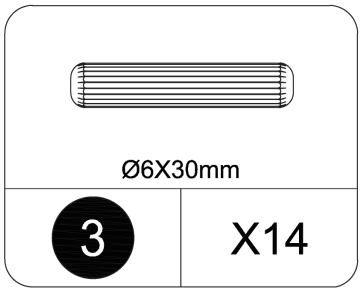

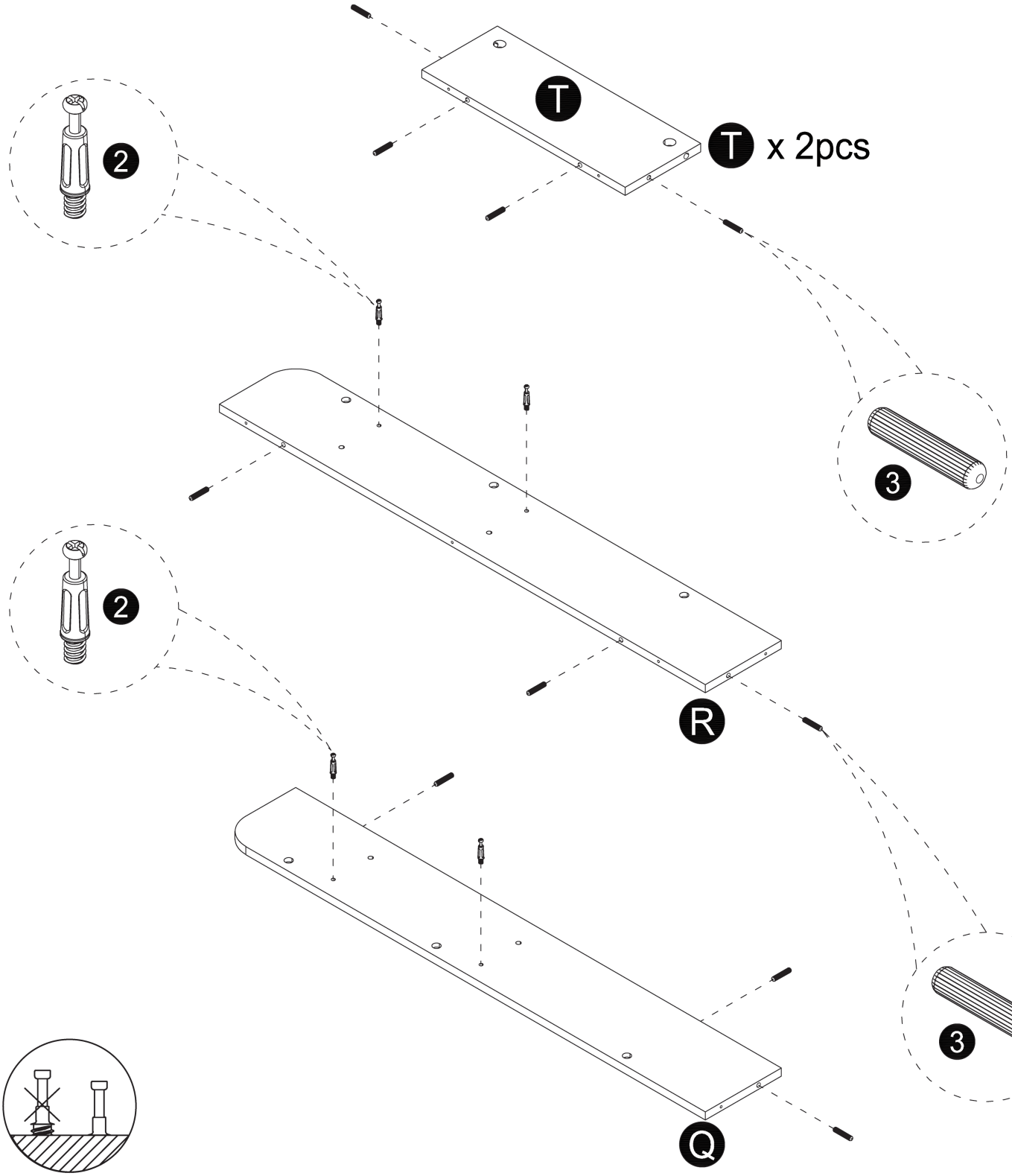

STEP8

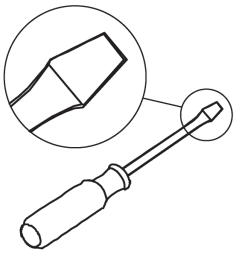

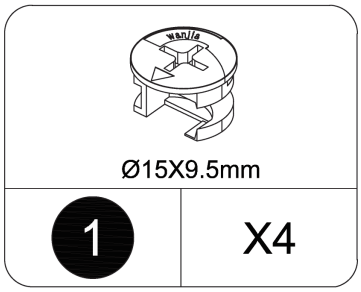

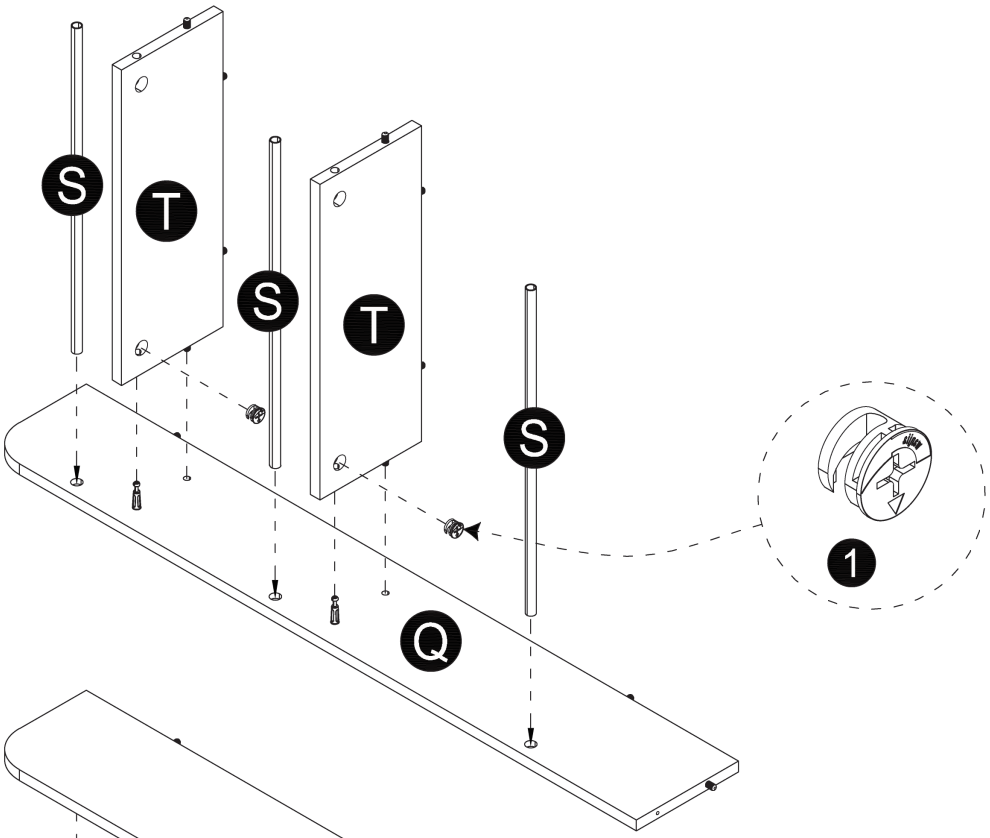

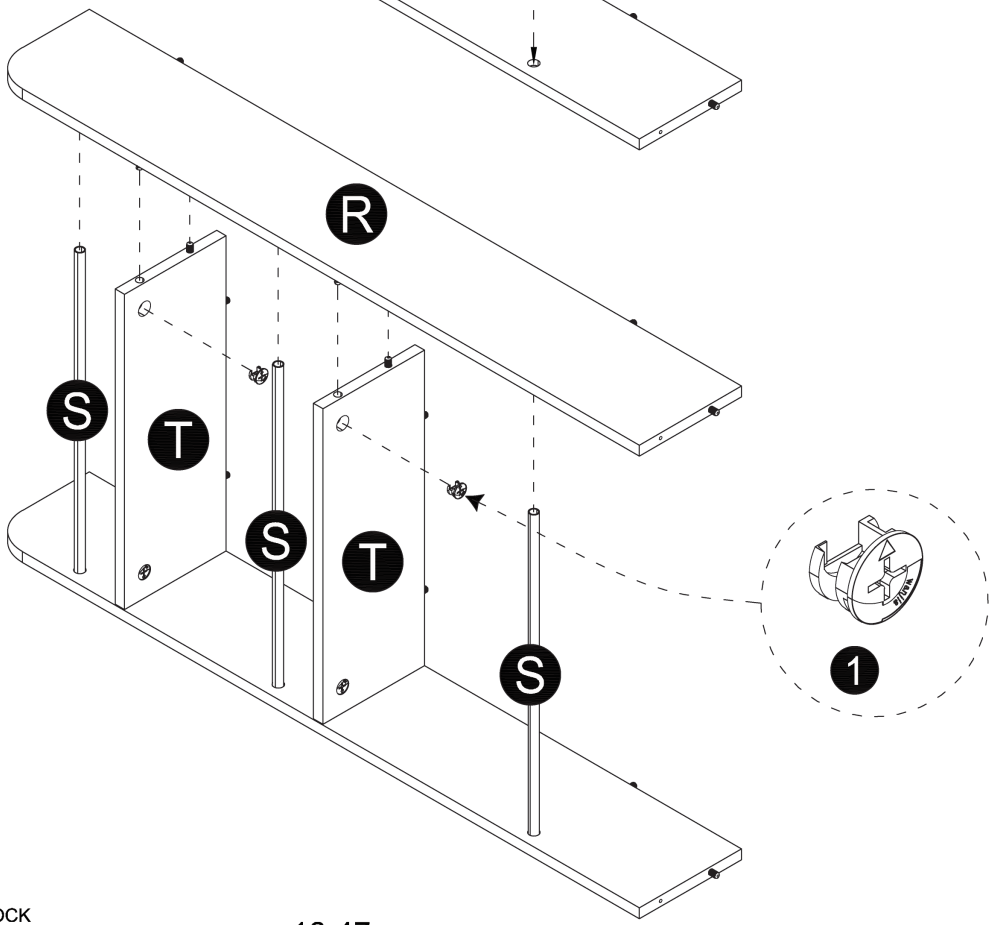

Insert the cam bolt into the hole first, then insert the cam lock and lock it.

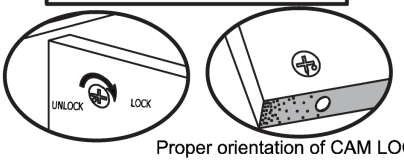

Proper orientation of CAM LOCK

STEP9

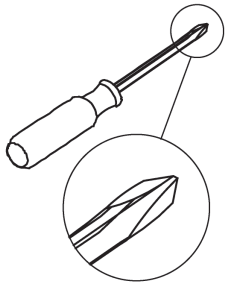

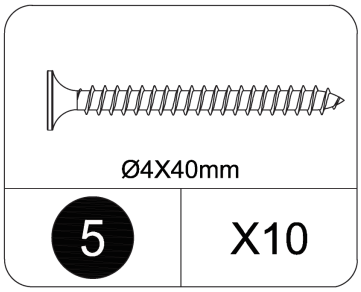

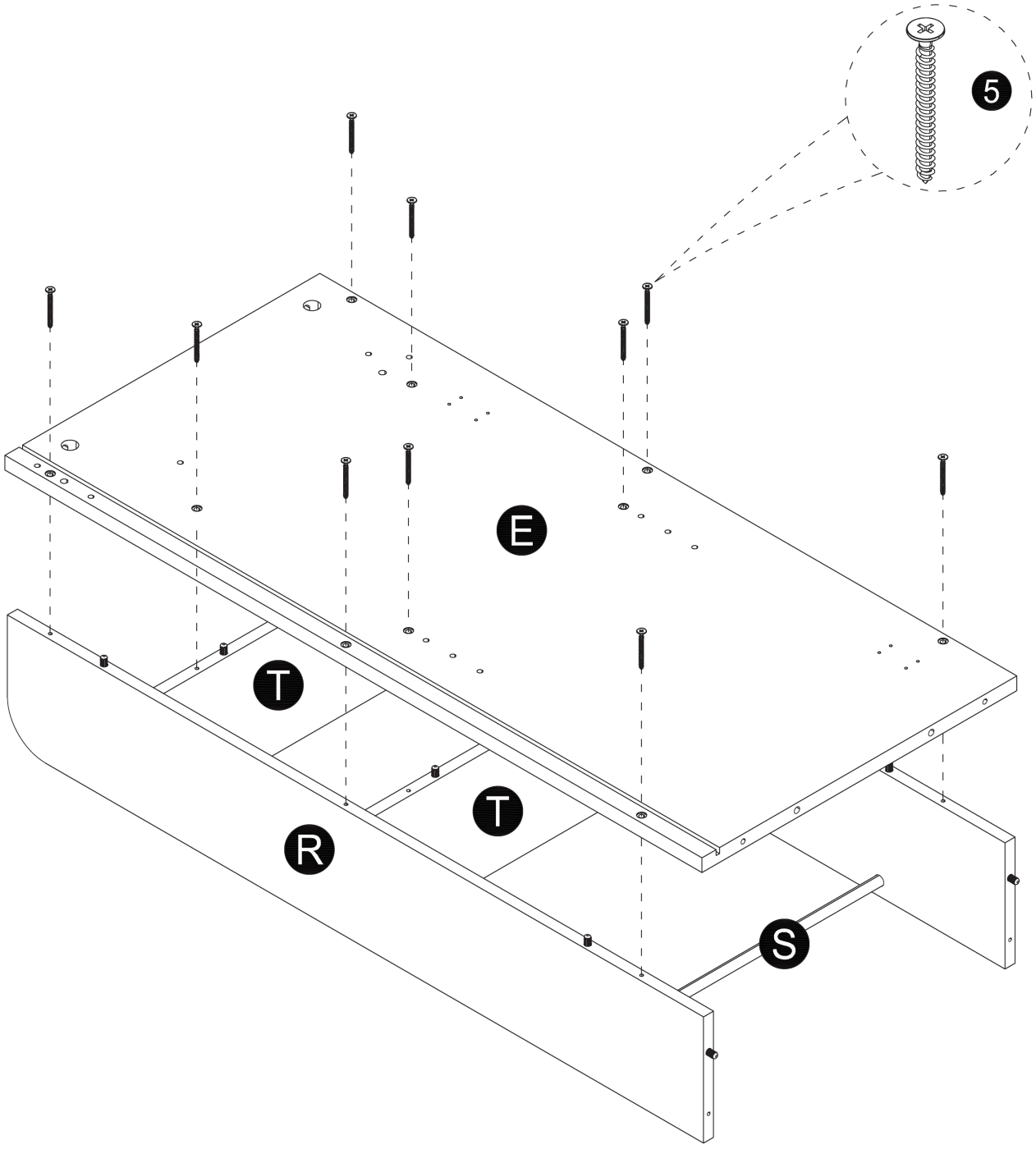

STEP10

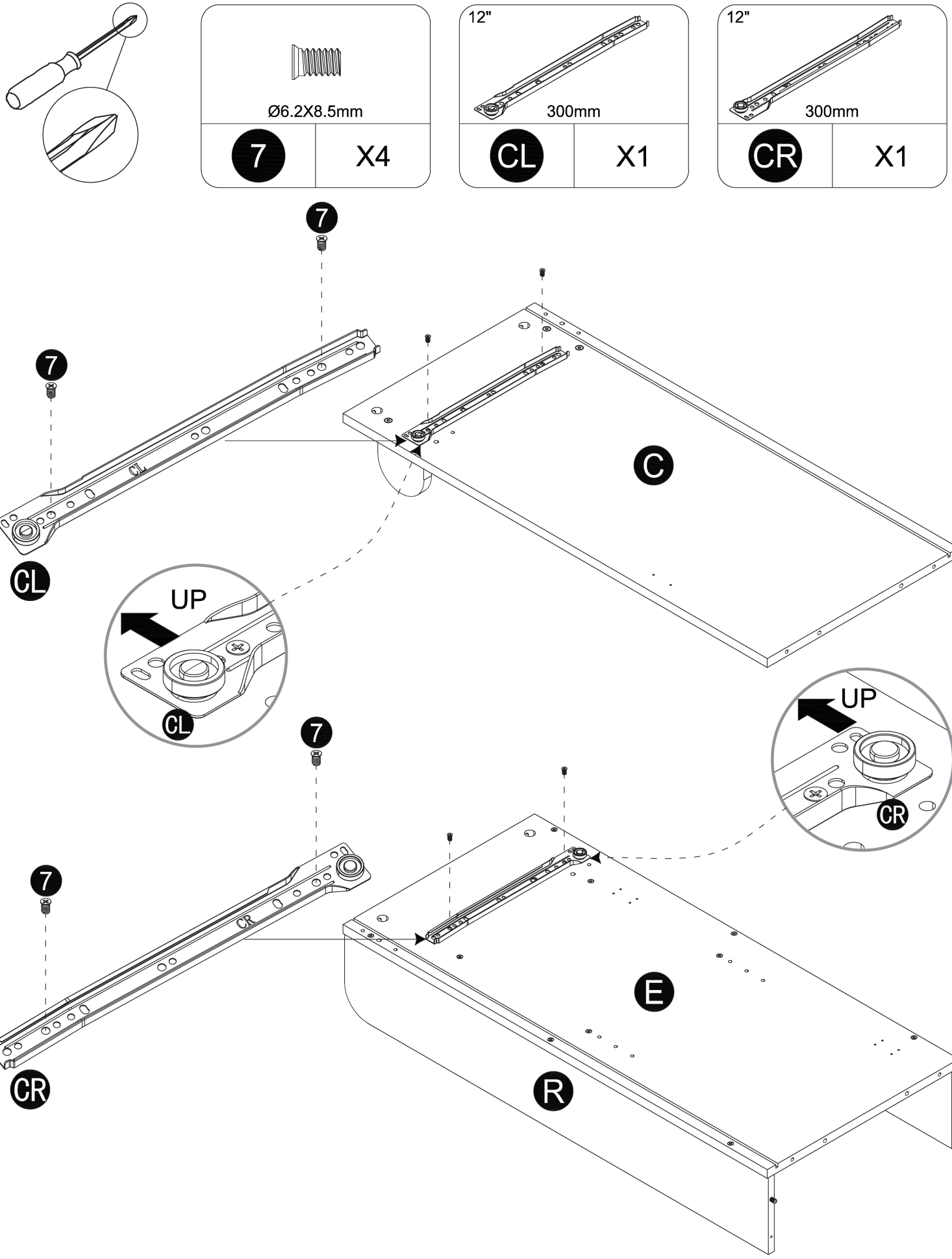
Ø6.2X8.5mm
7
X4
12"
300mm
CL
X1
12"
300mm
CR
X1
7
CL
C
UP
CL
UP
CR
7
CR
E
R

STEP11

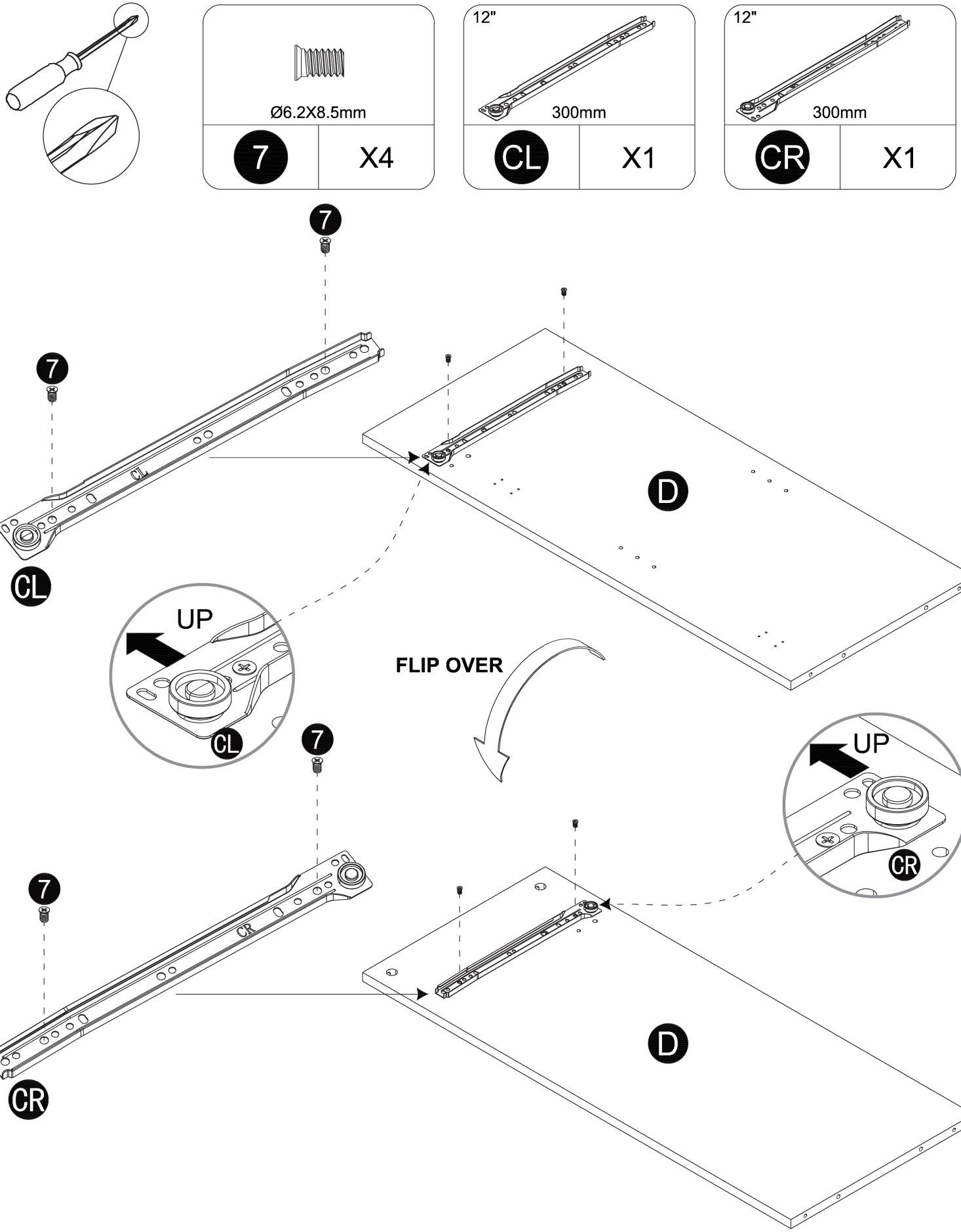
Ø6.2X8.5mm
7
X4
12"
300mm
CL
X1
12"
300mm
CR
X1
7
7
CL
D
UP
CL
FLIP OVER
7
UP
CR
7
CR
D

STEP12

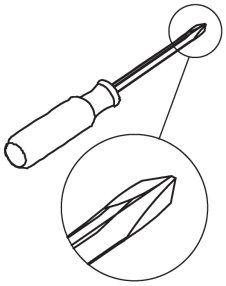

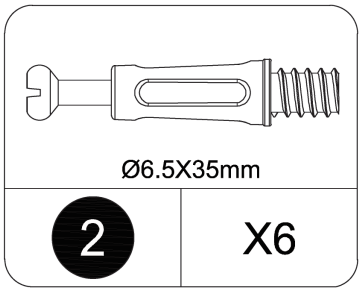

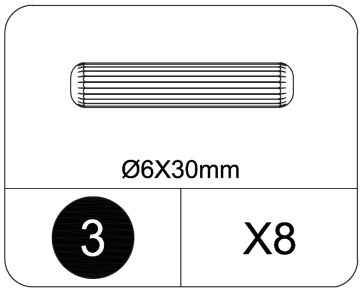

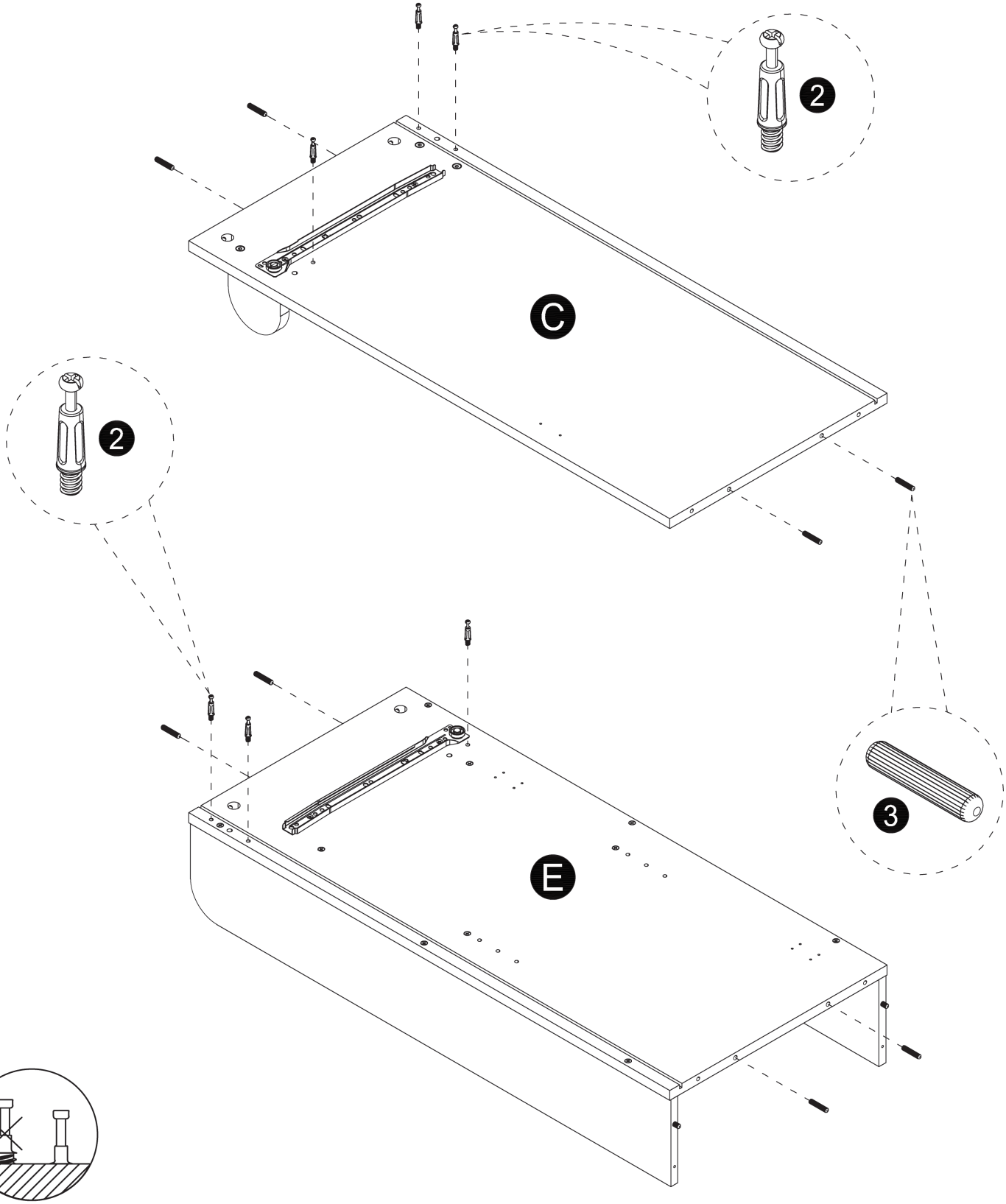

STEP13

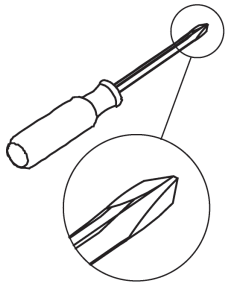

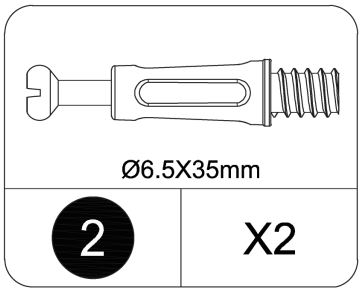

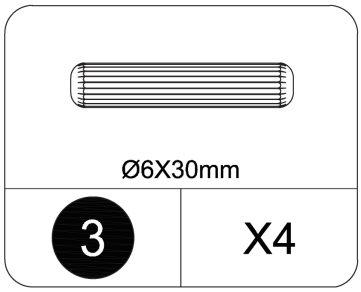

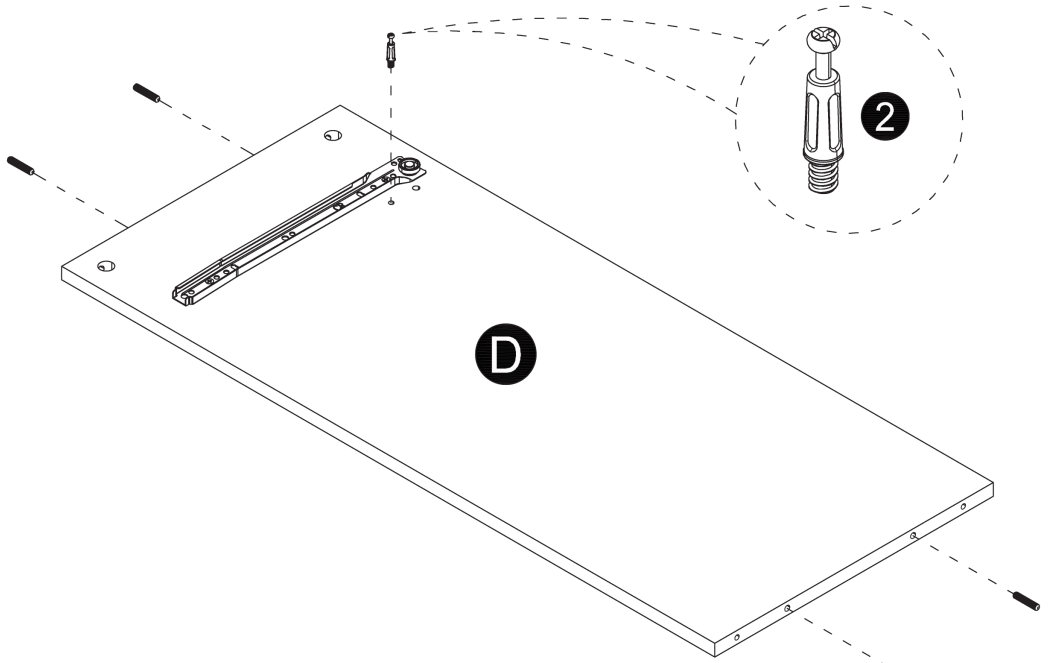

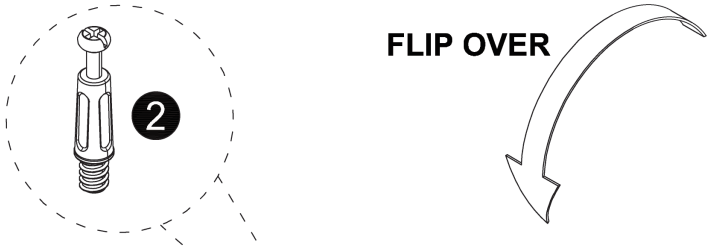

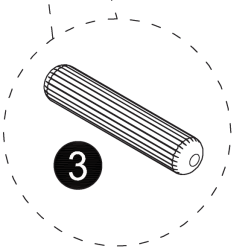

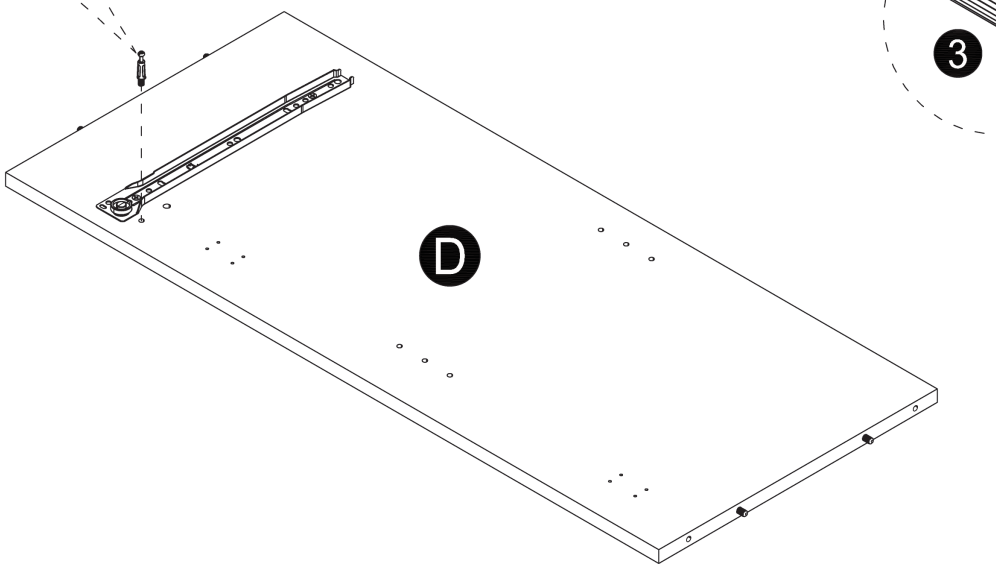

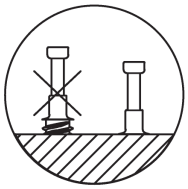

STEP14

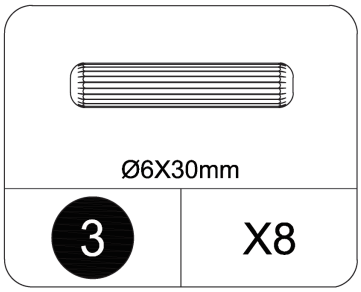

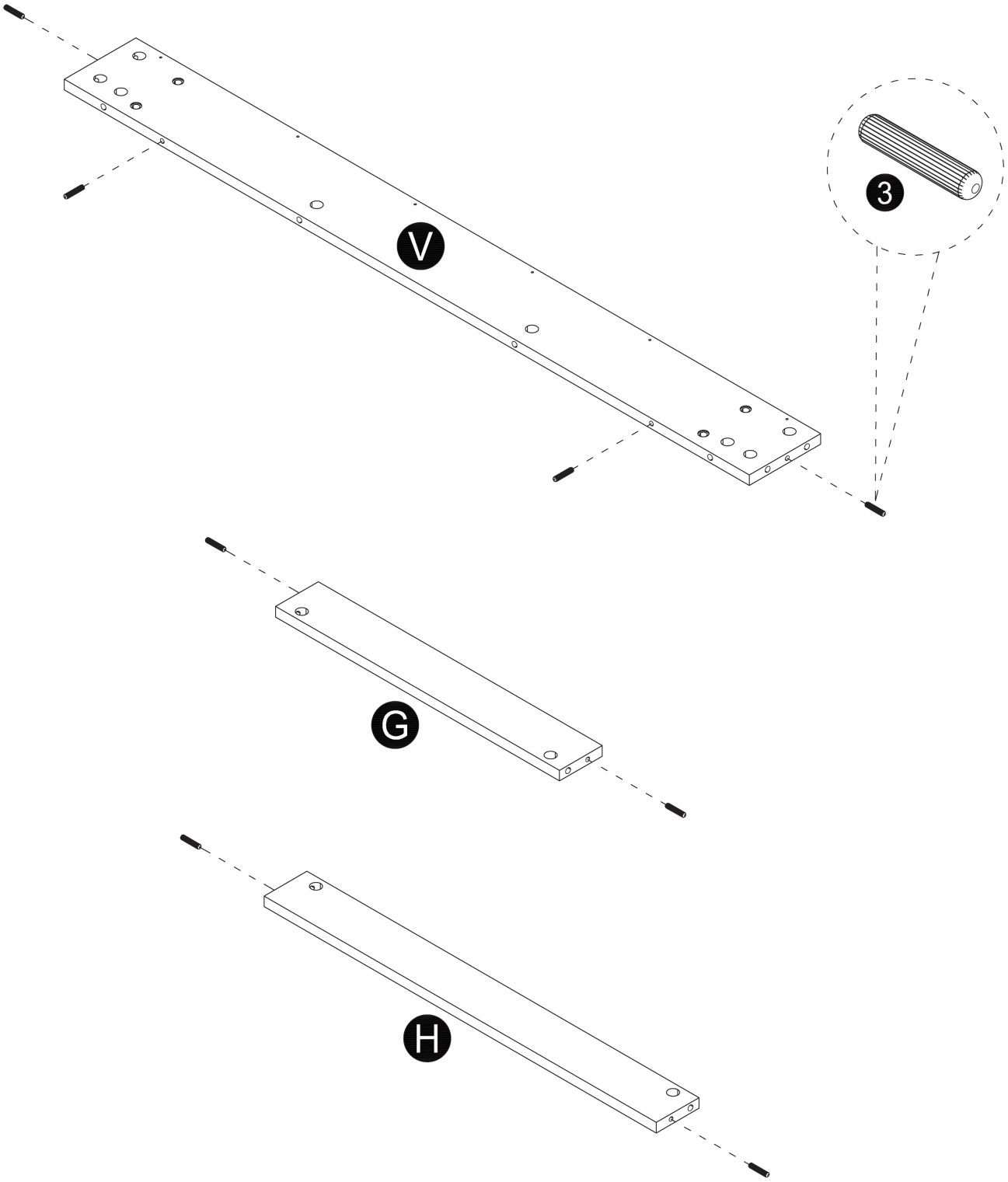

STEP15

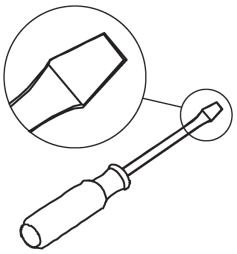

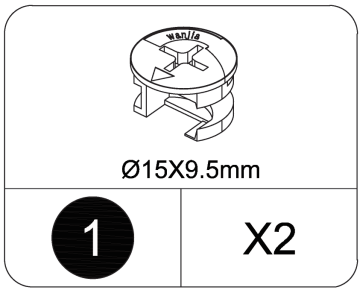

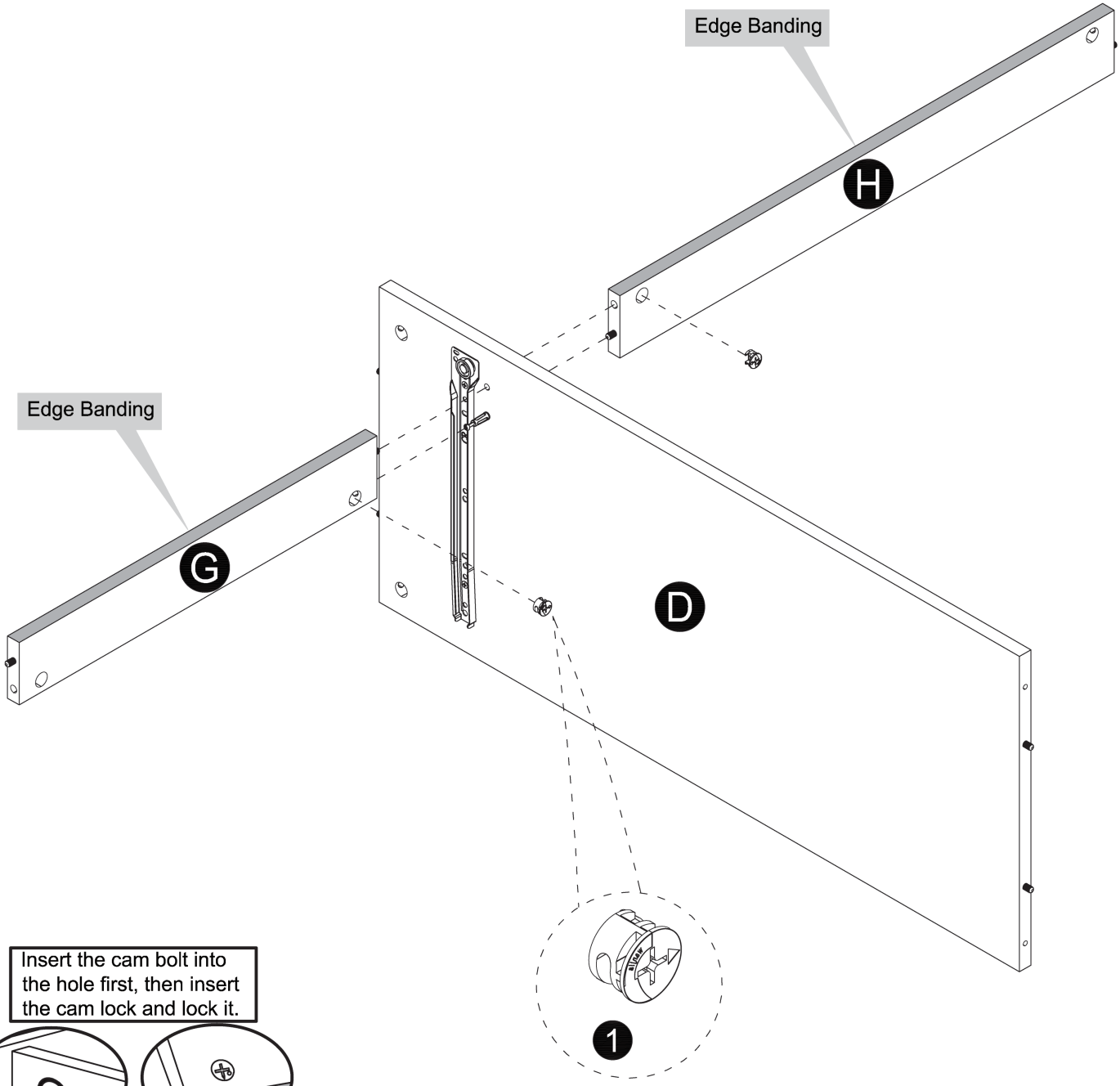

Insert the cam bolt into the hole first, then insert the cam lock and lock it.

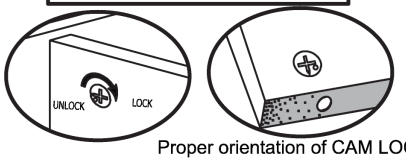

Proper orientation of CAM LOCK

STEP16

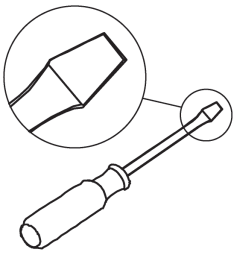

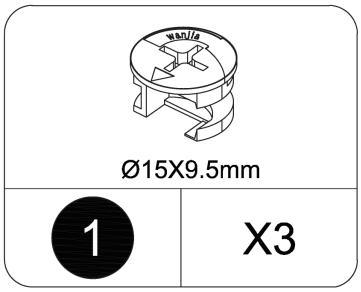

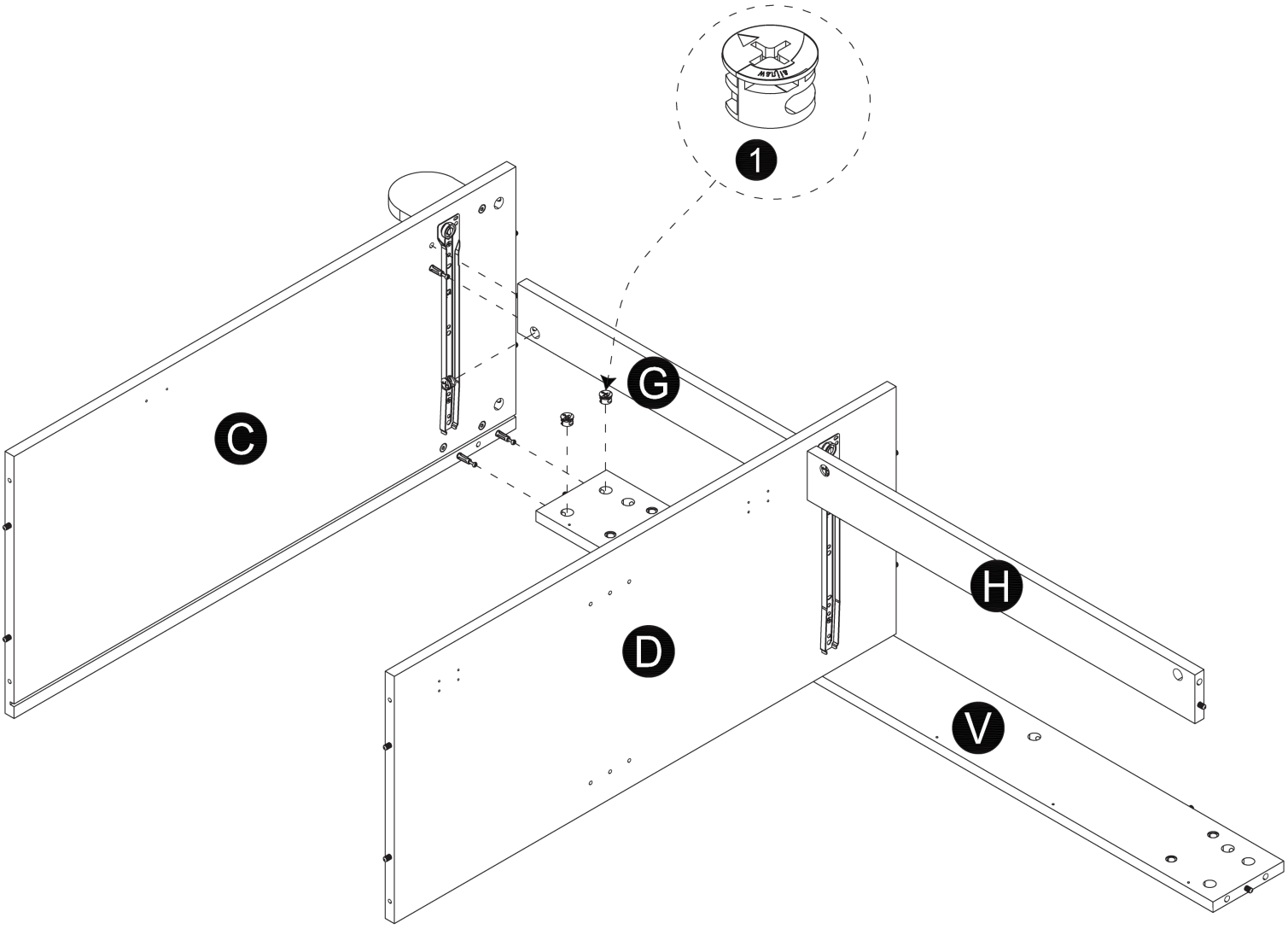

Insert the cam bolt into the hole first, then insert the cam lock and lock it.

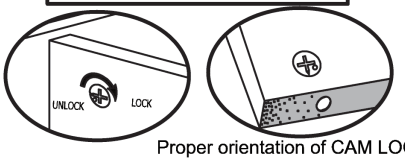

Proper orientation of CAM LOCK

STEP17

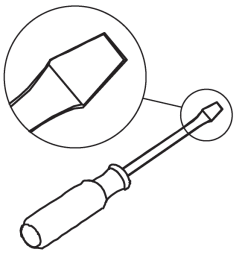

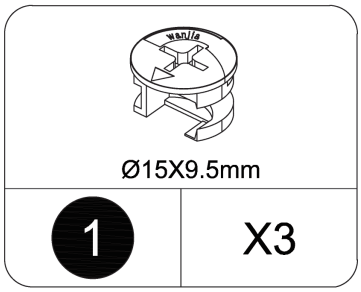

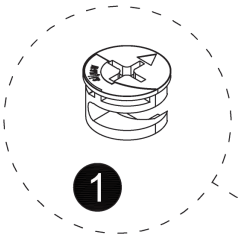

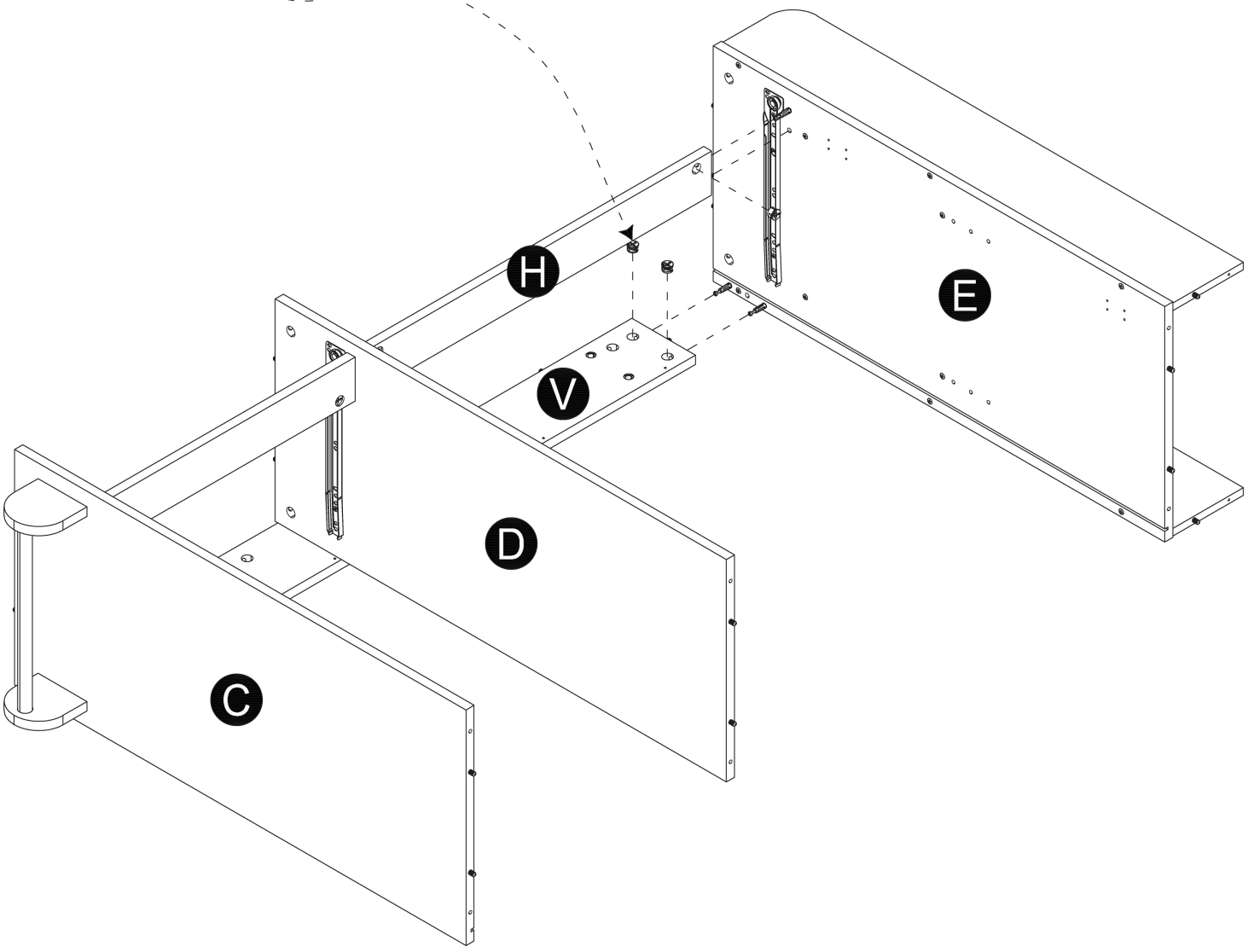

Insert the cam bolt into the hole first, then insert the cam lock and lock it.

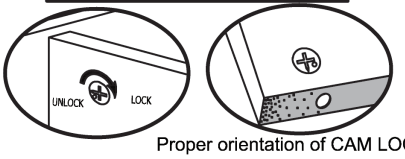

Proper orientation of CAM LOCK

STEP18

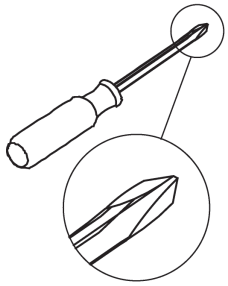

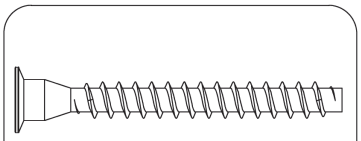

Ø6.3X50mm

4	X6

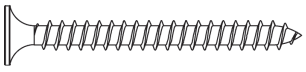

Ø4X40mm

5	X2



M4X96(55)mm

22	X1

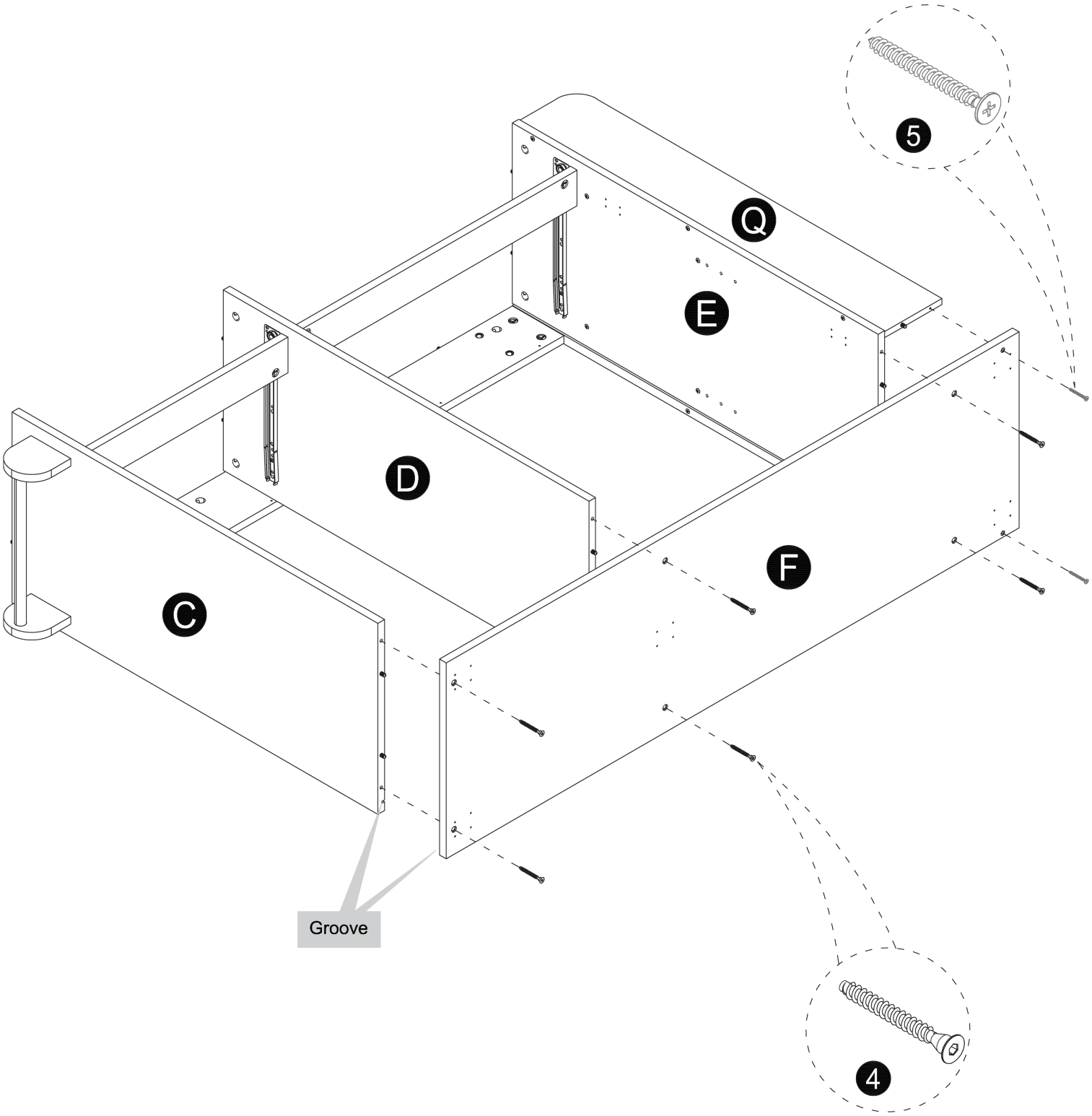

STEP19

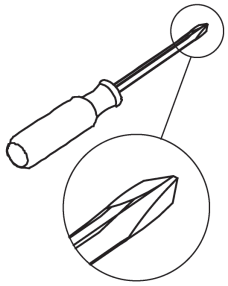

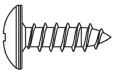

Ø4X12mm

10	X20

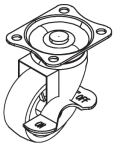

Ø40mm

23	X2

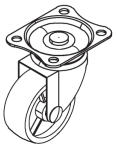

Ø40mm

24	X3

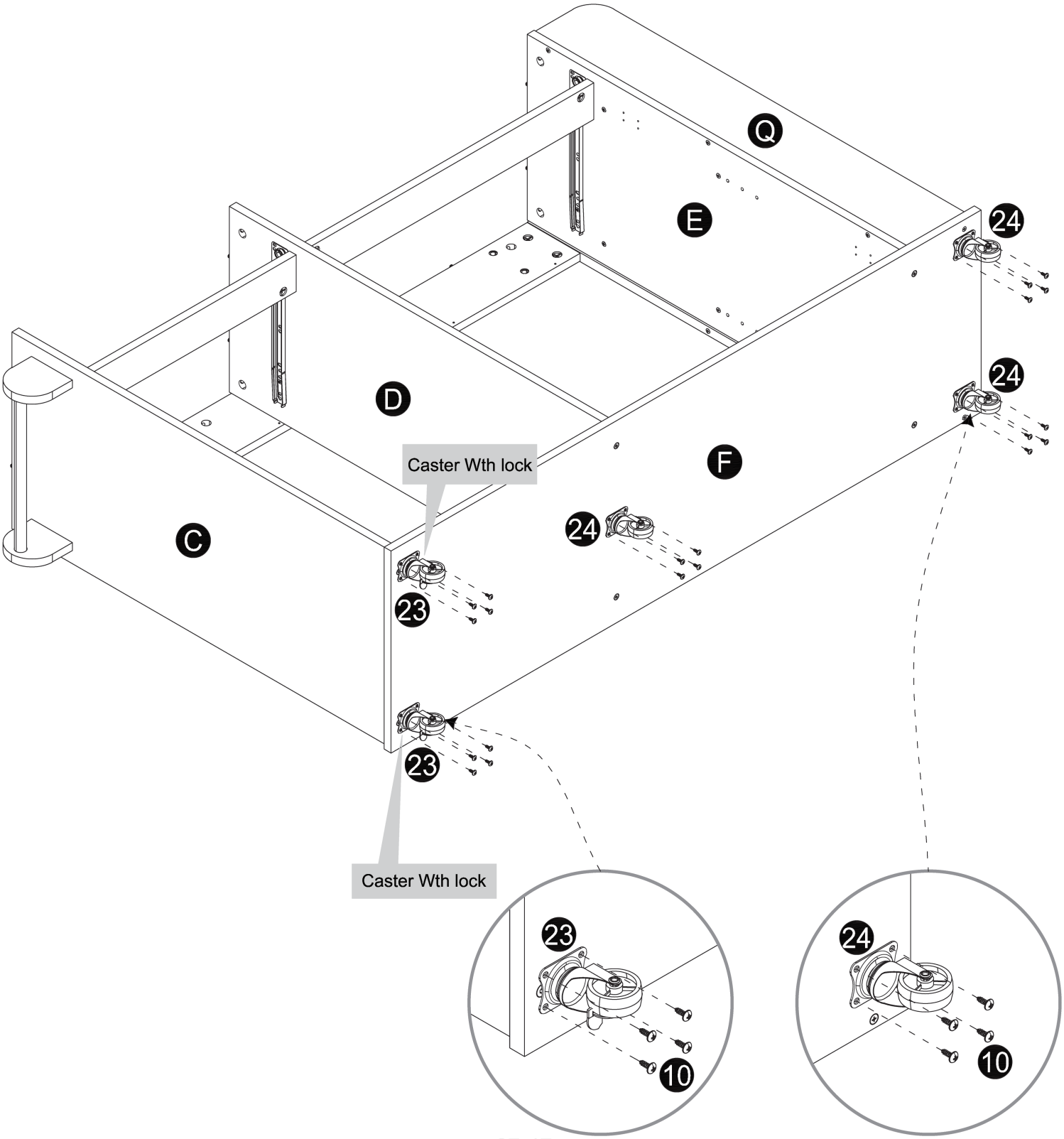

STEP20

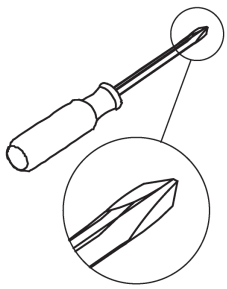

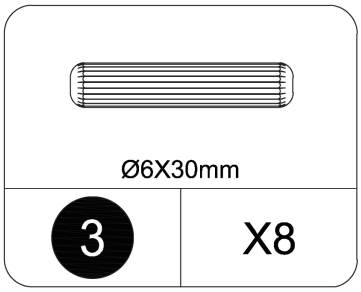

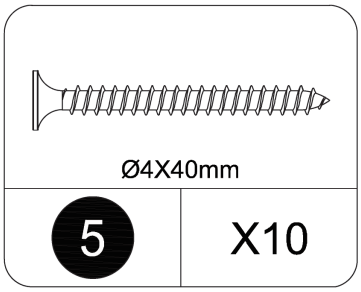

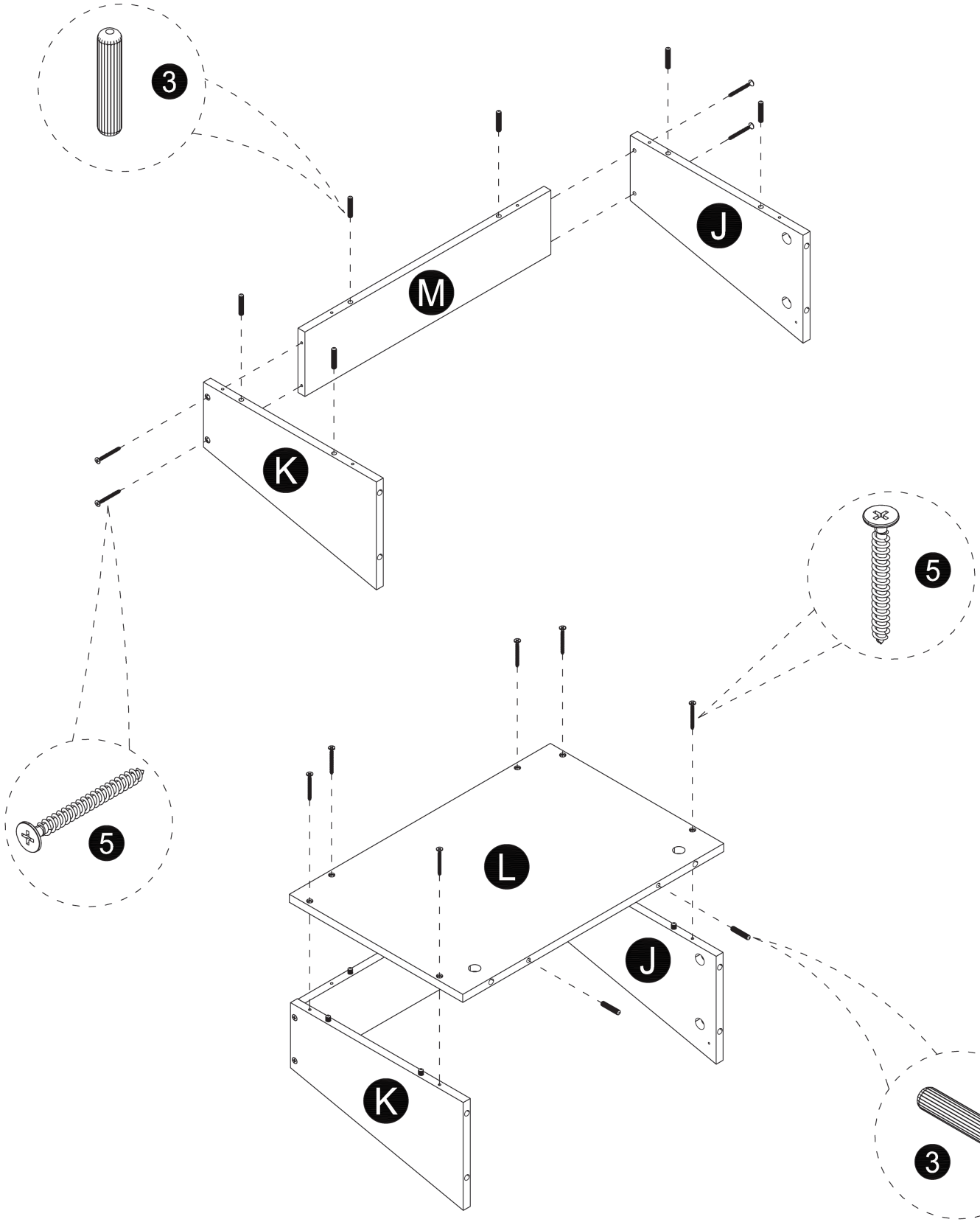

STEP21

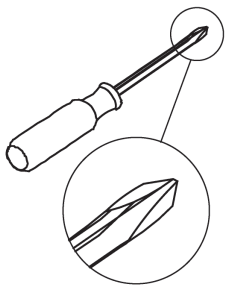

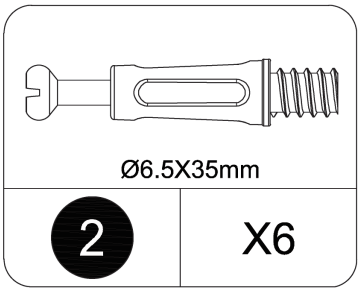

Ø6.5X35mm

2	X6

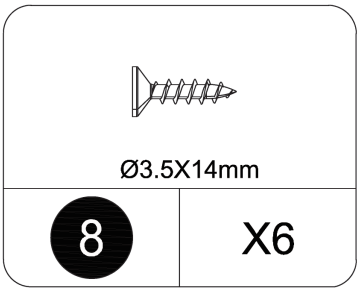

Ø3.5X14mm

8	X6

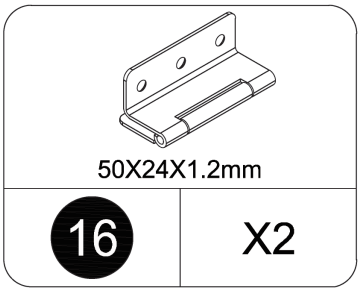

50X24X1.2mm

16	X2

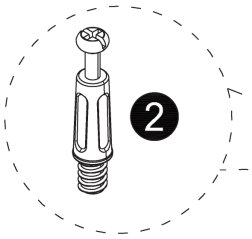

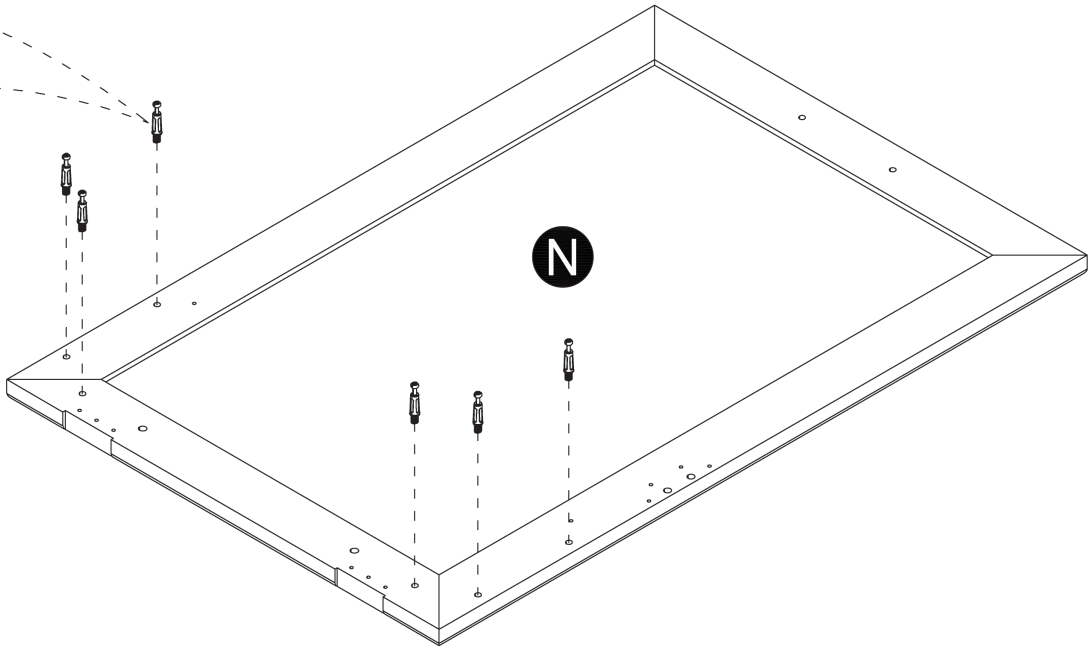

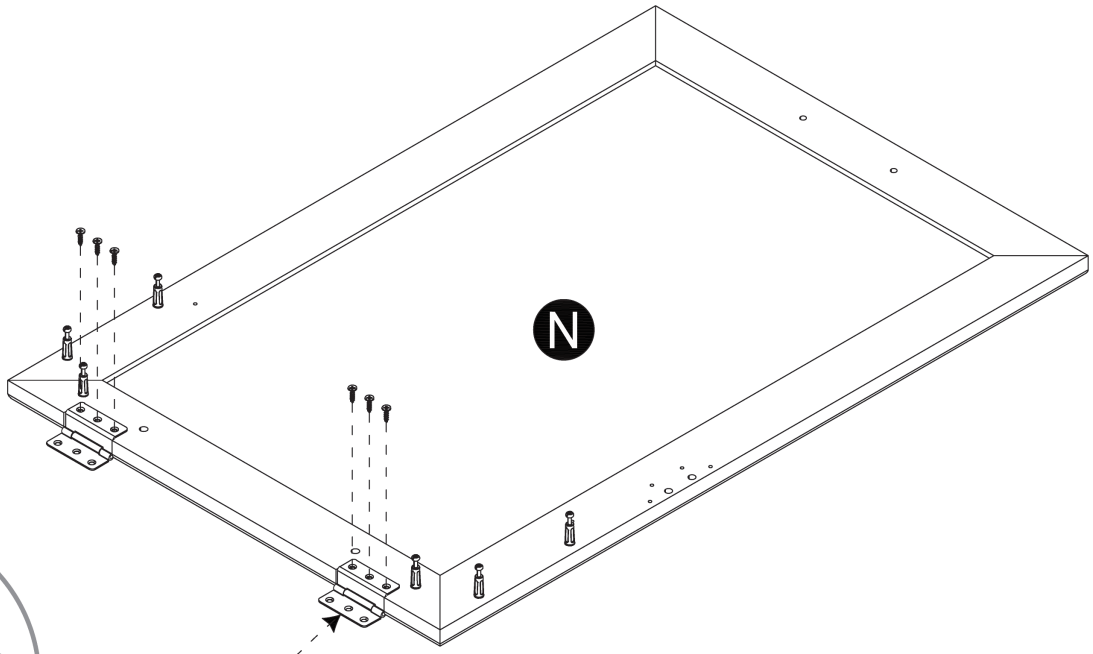

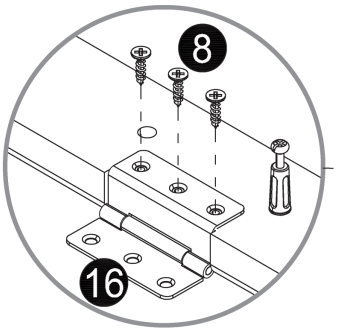

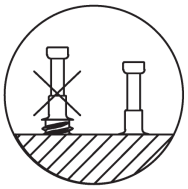

STEP22

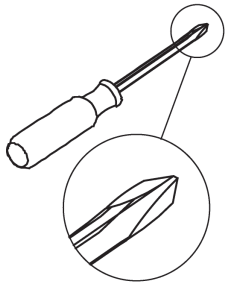

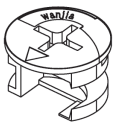

Ø15X9.5mm

1	X6

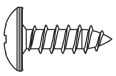

Ø4X12mm

10	X4



80X30X1.5mm

19	X1

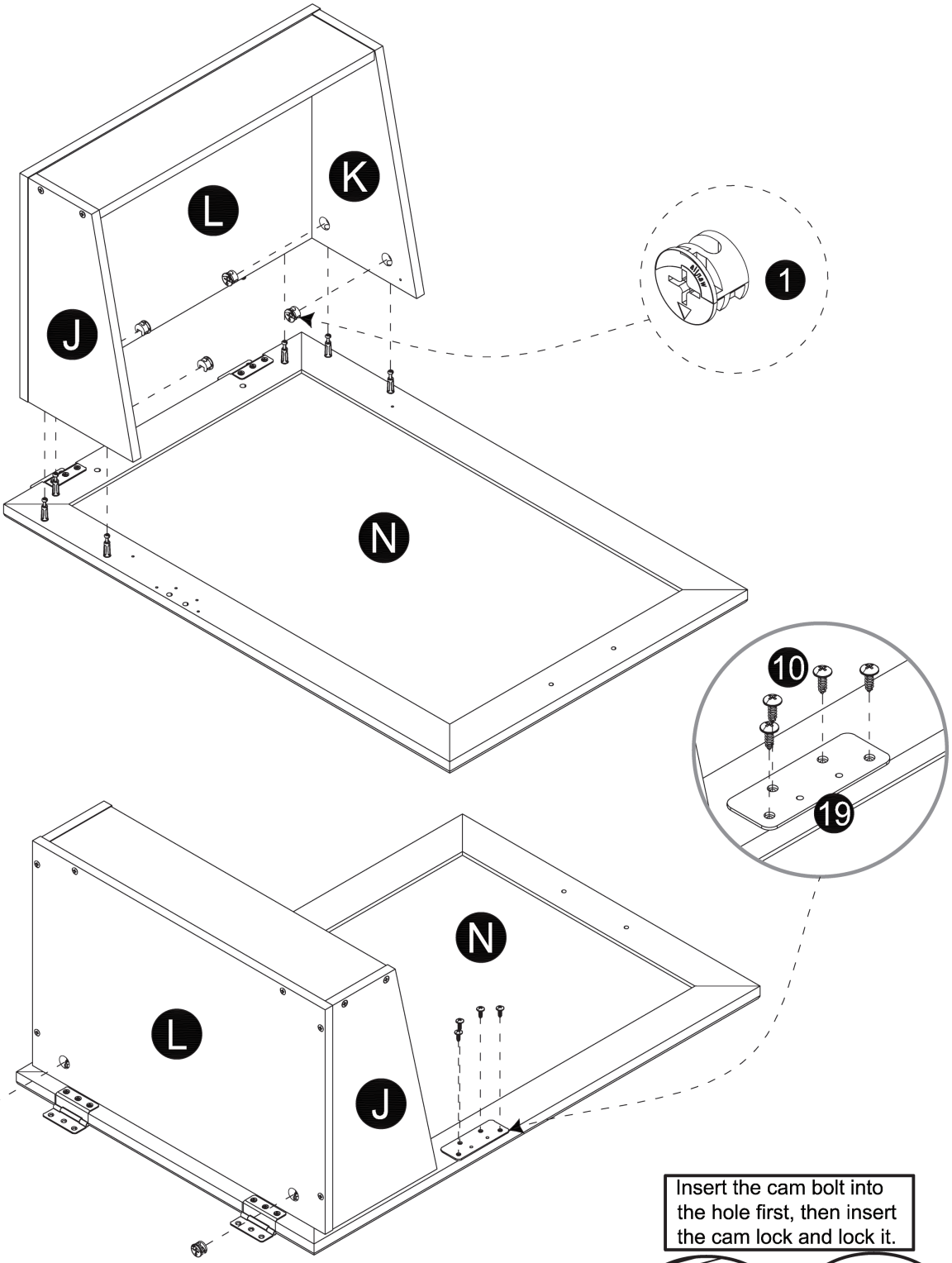

Insert the cam bolt into the hole first, then insert the cam lock and lock it.

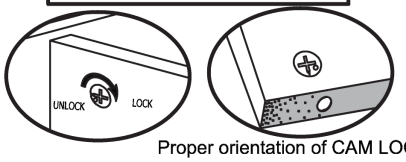

Proper orientation of CAM LOCK

STEP23

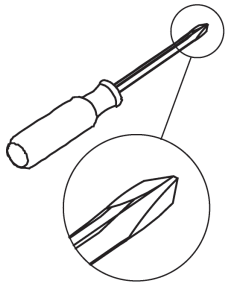

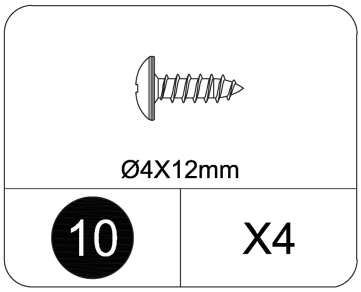

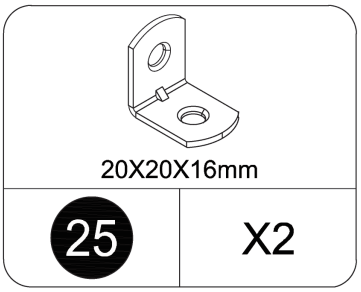

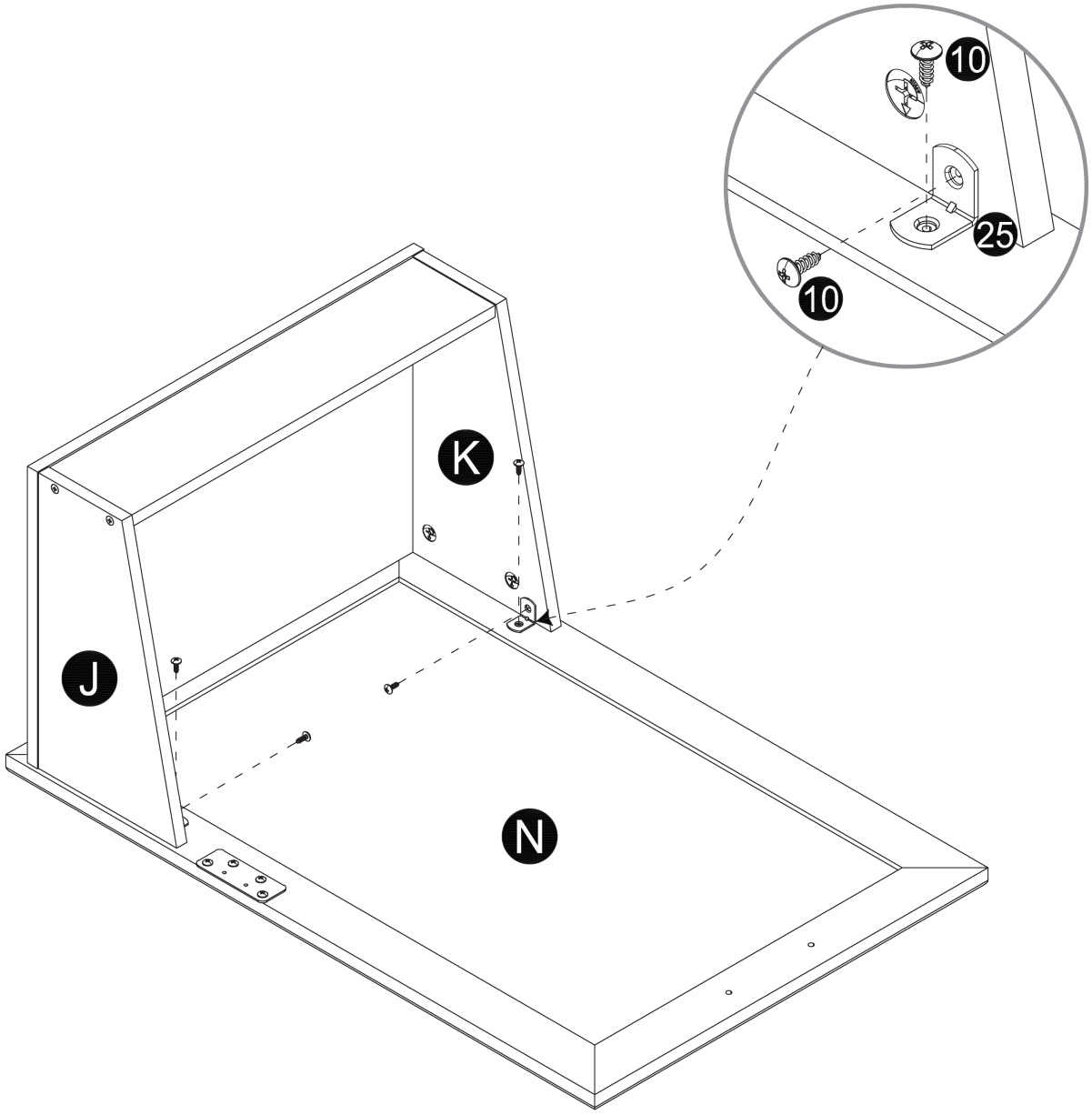

STEP24

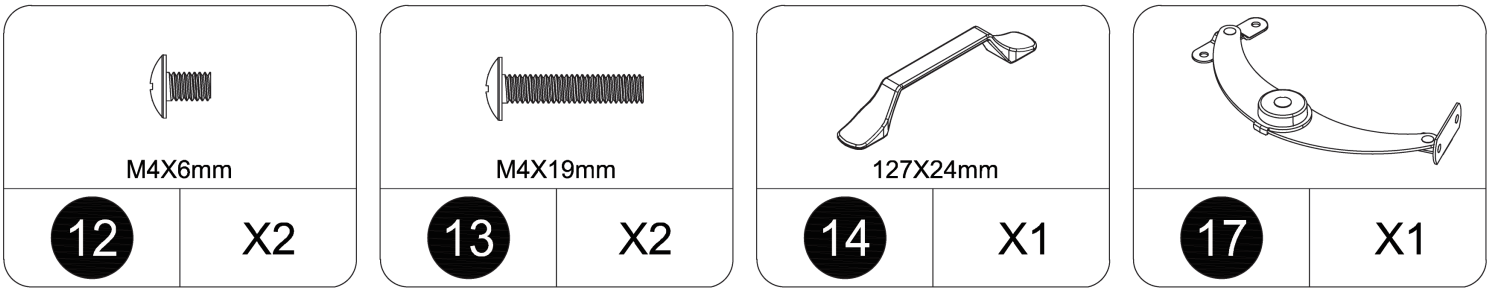

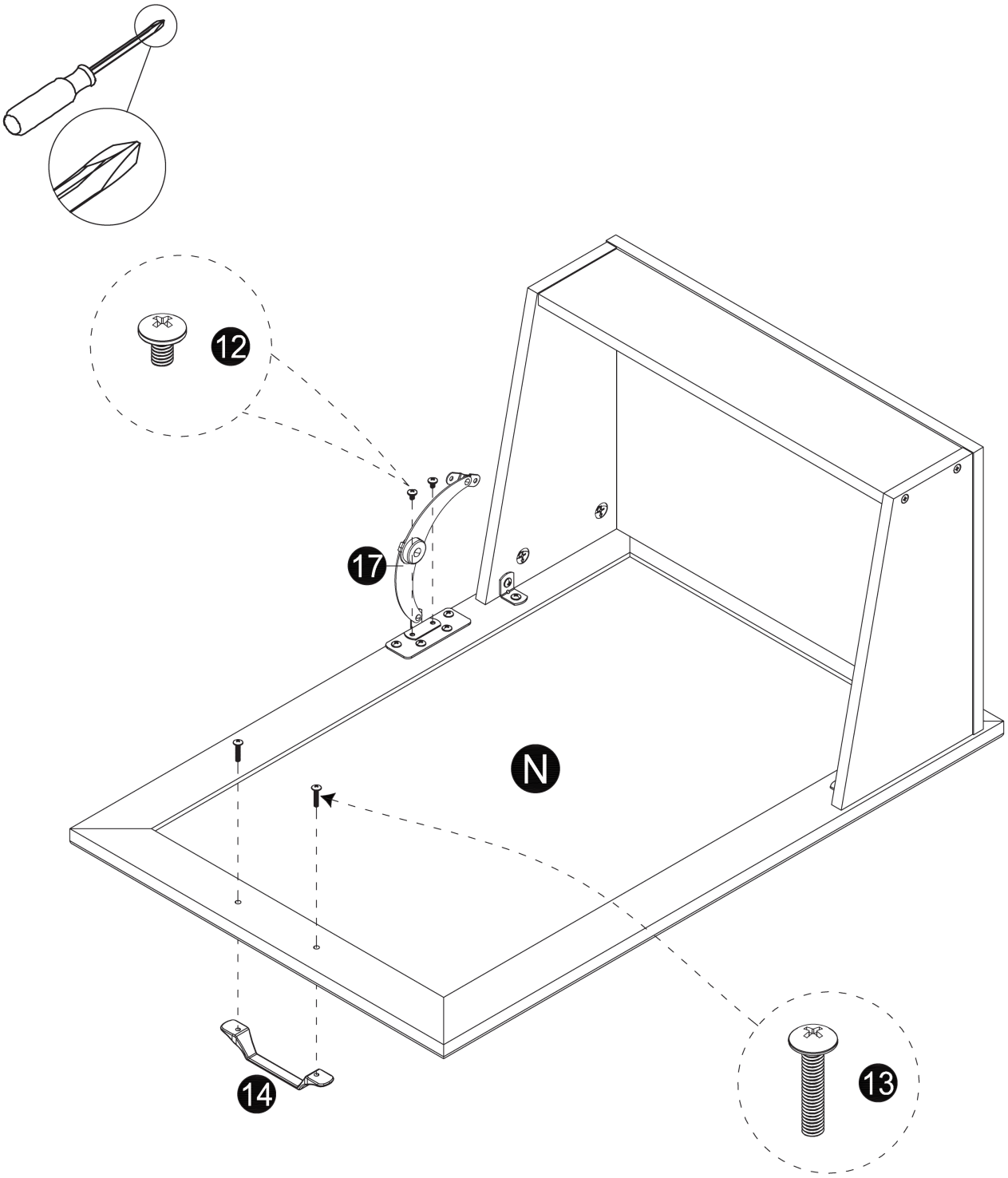

STEP25

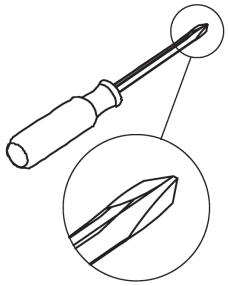

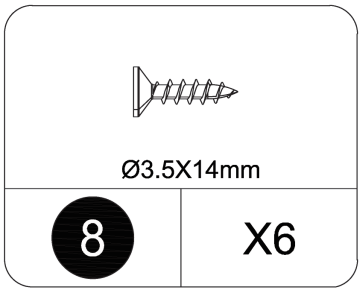

THIS STEP REQUIRES 2 PEOPLE

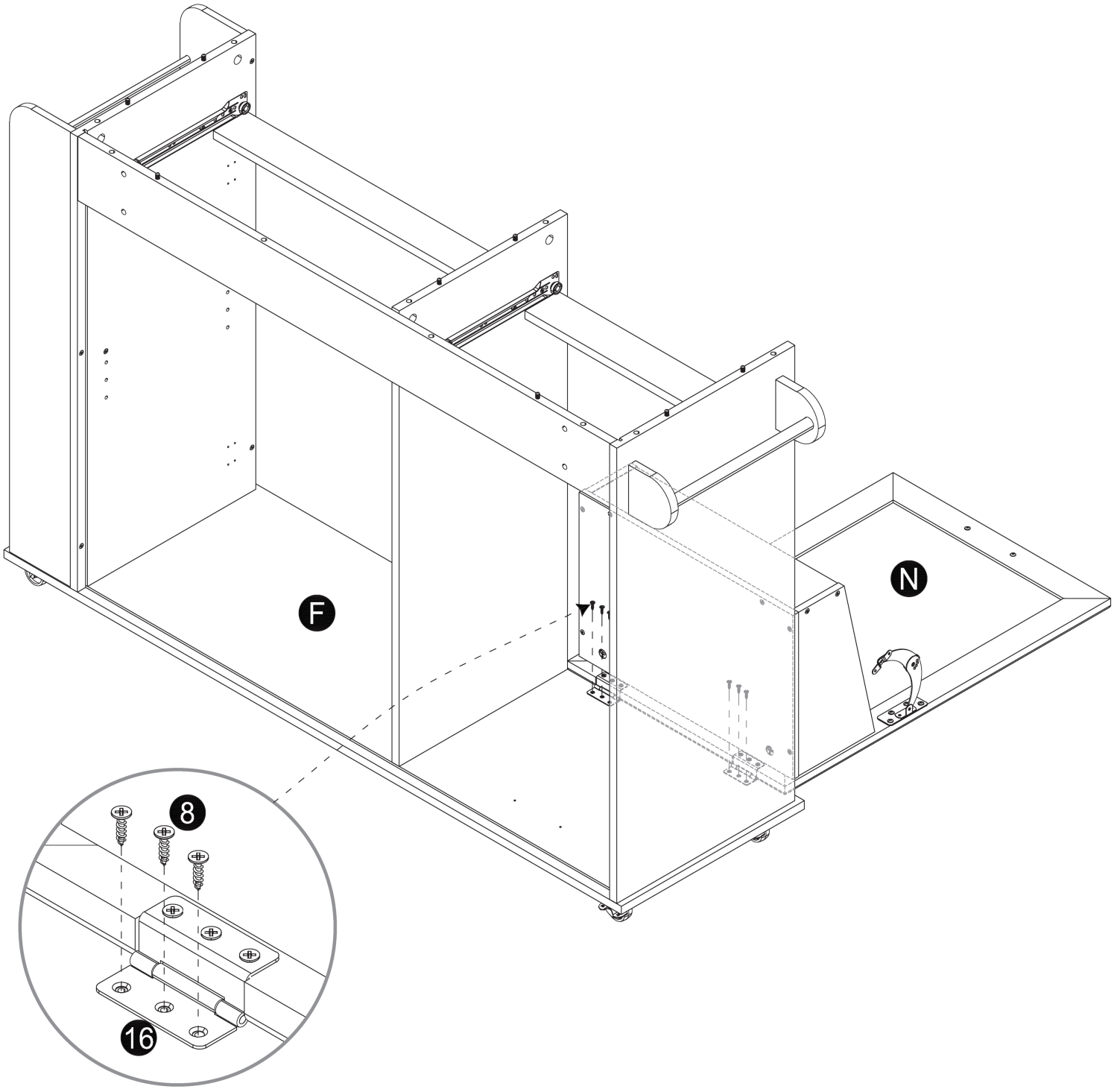

STEP26

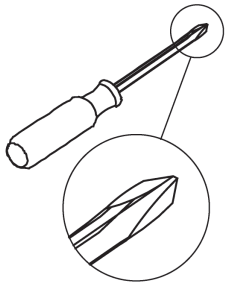

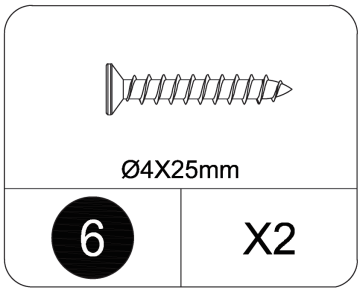

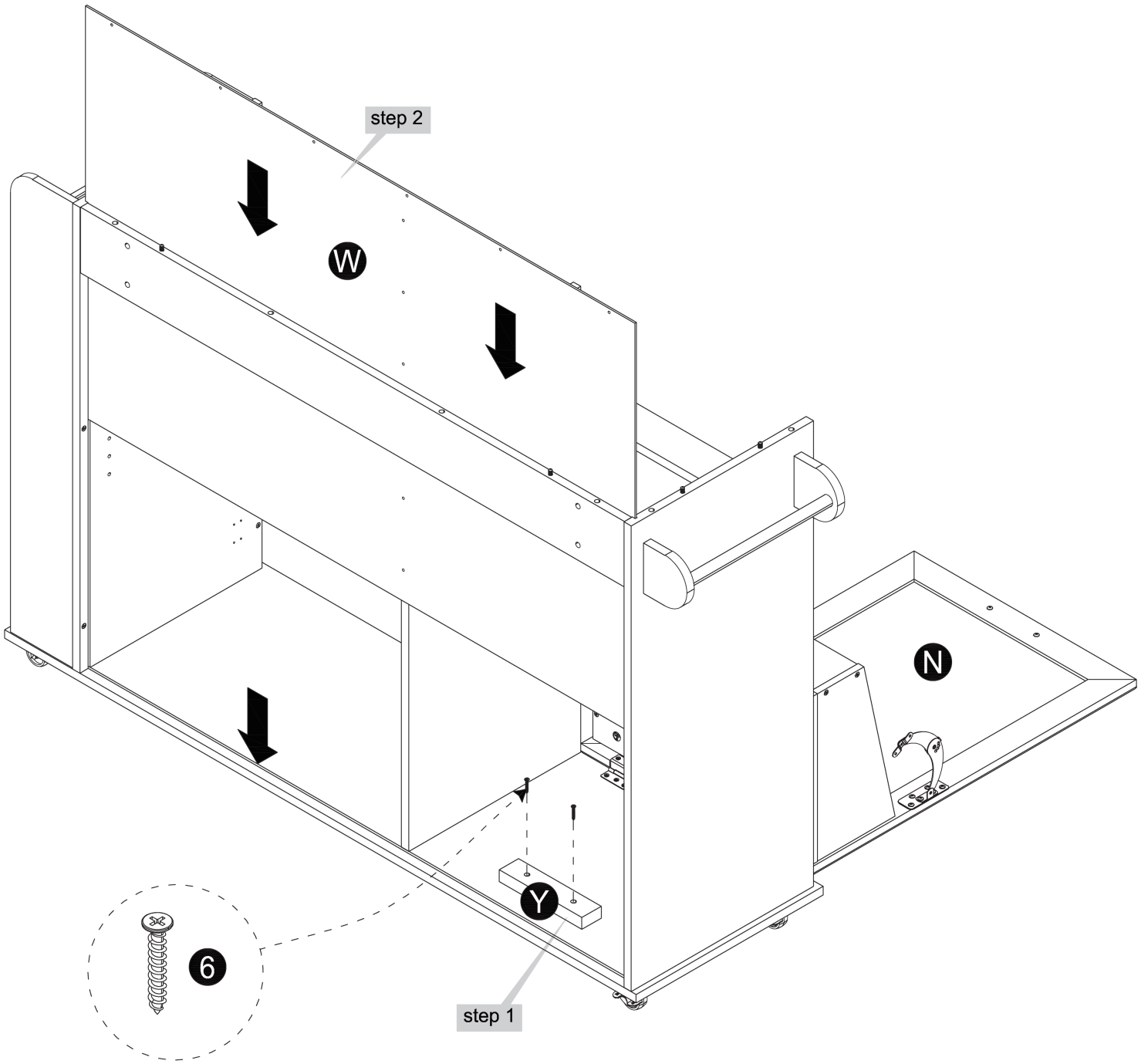

STEP27

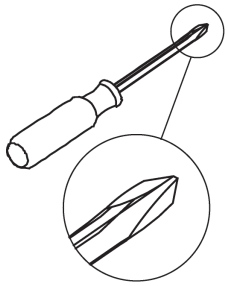

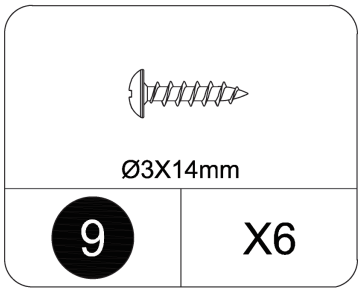

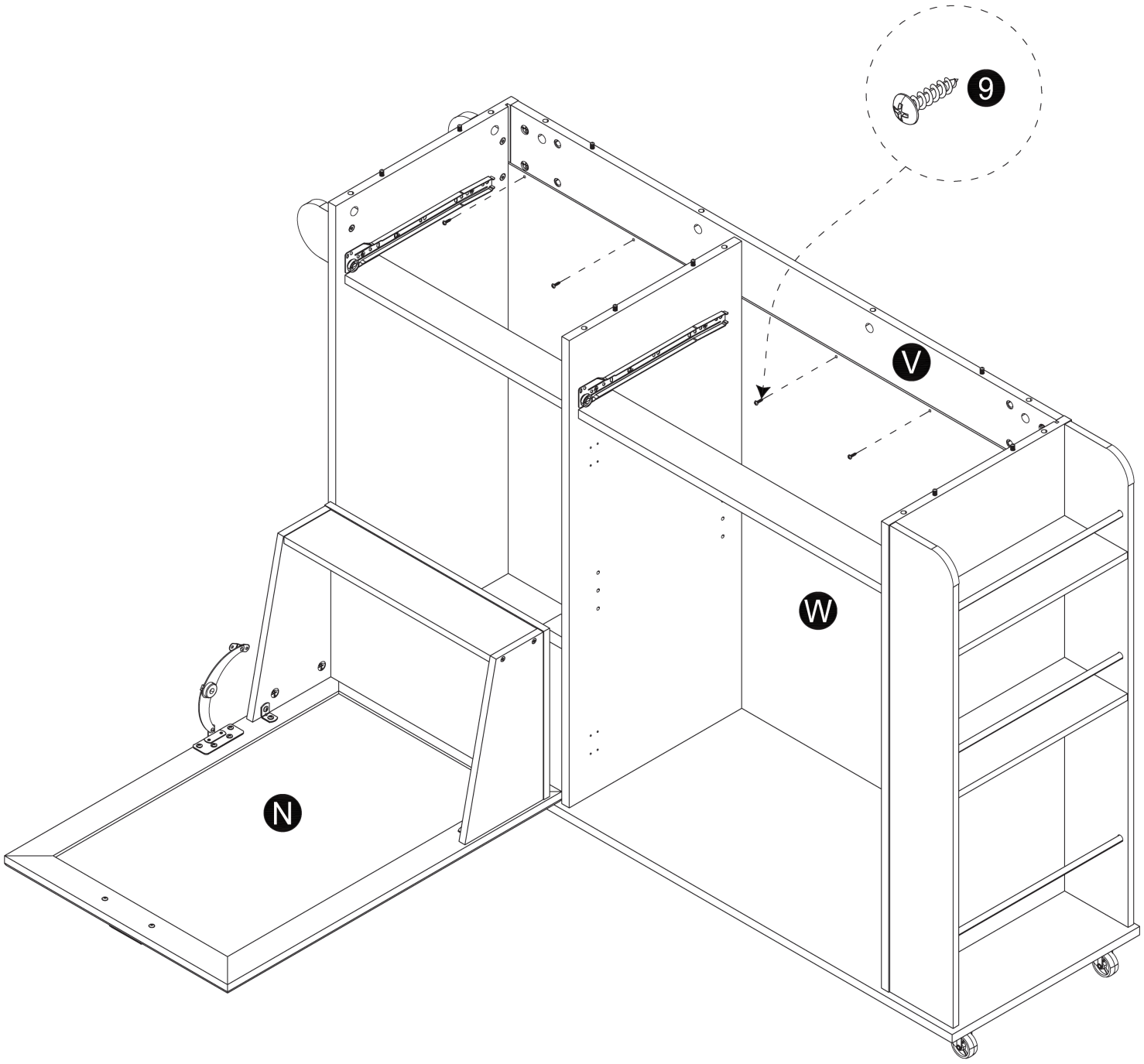

STEP28

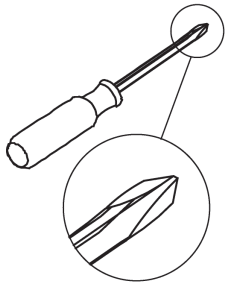

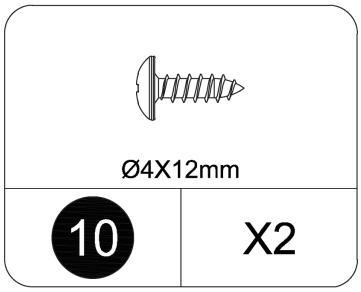

THIS STEP REQUIRES 2 PEOPLE

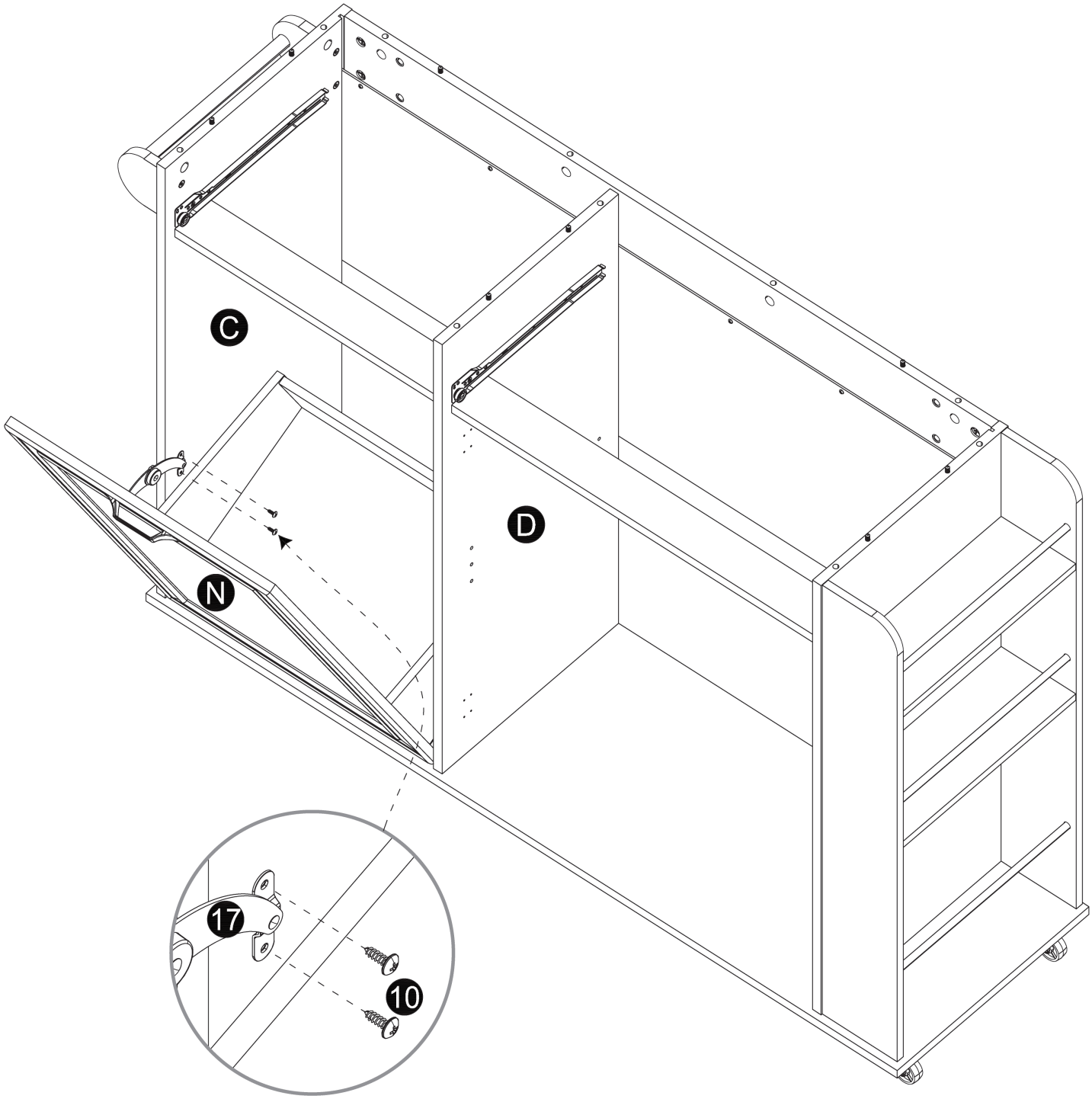

STEP29

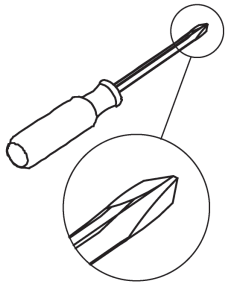

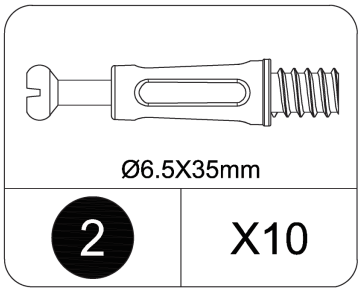

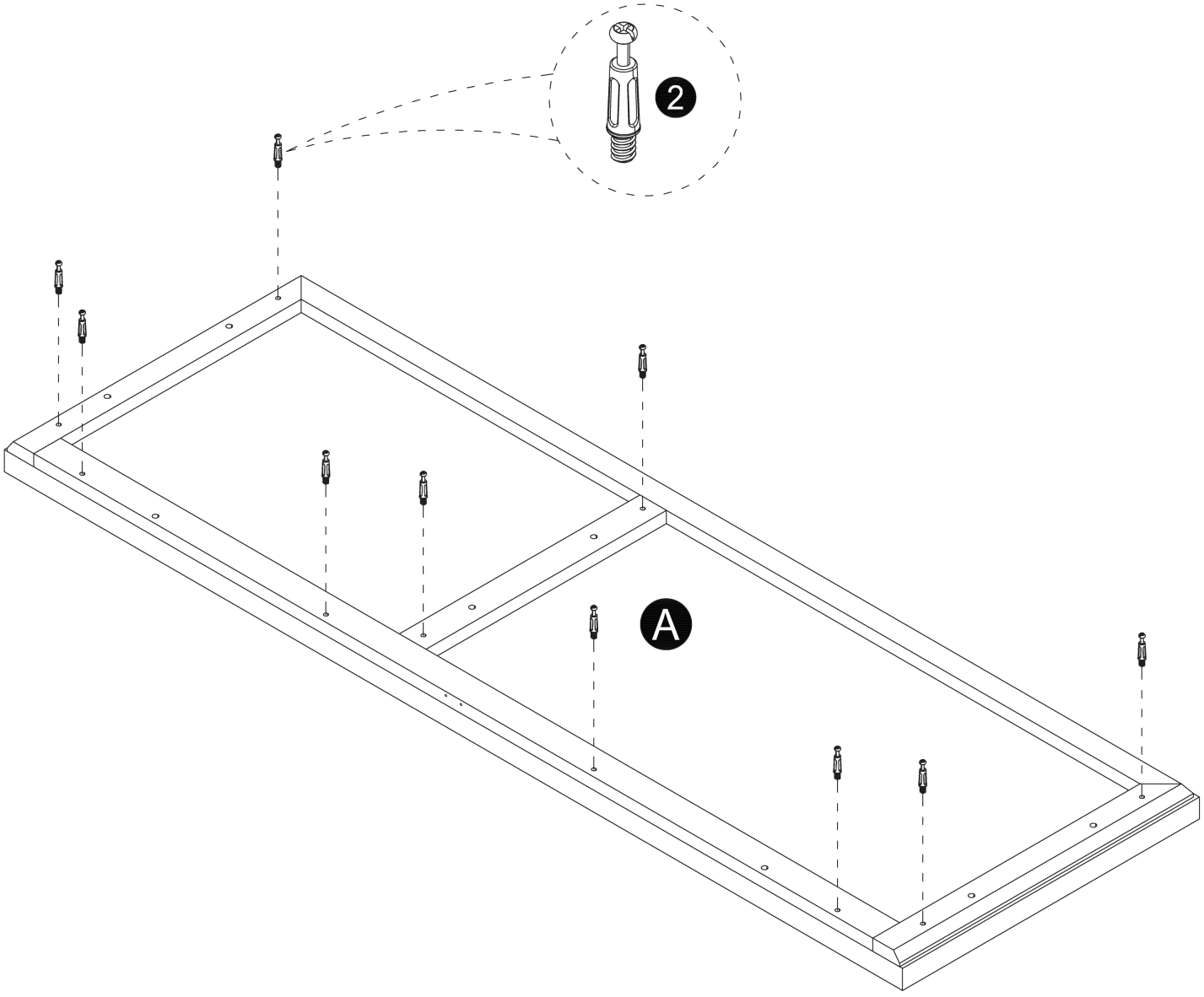

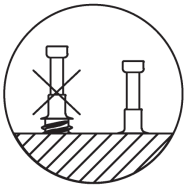

STEP30

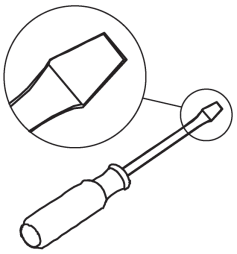

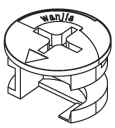

Ø15X9.5mm

1	X10

THIS STEP REQUIRES 2 PEOPLE

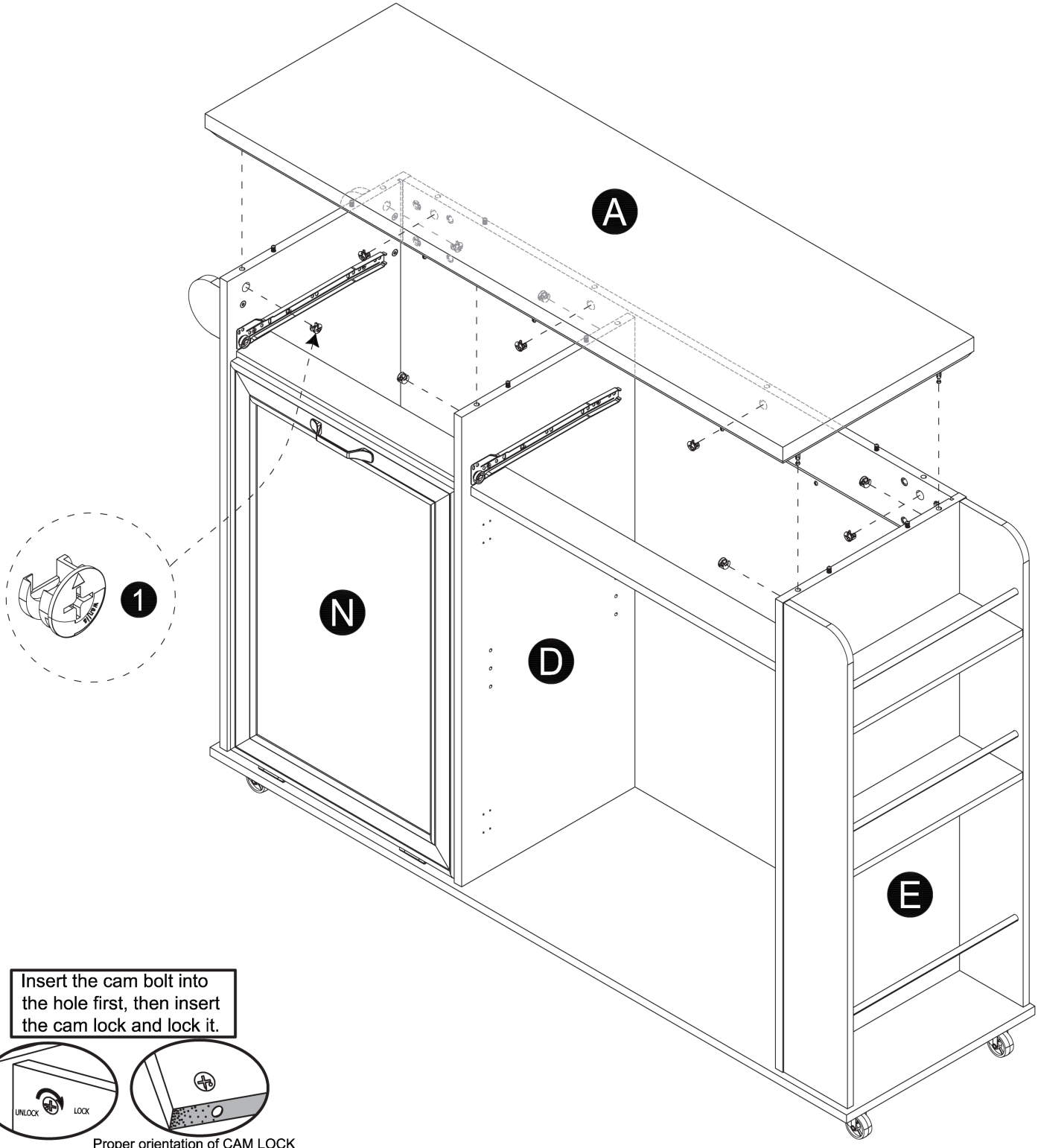

Insert the cam bolt into the hole first, then insert the cam lock and lock it.

Proper orientation of CAM LOCK

STEP31

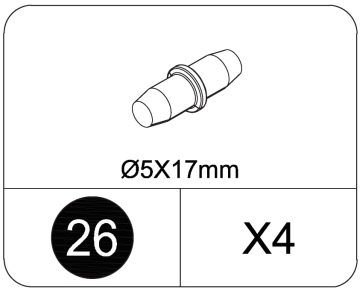

This shelf features freely adjustable height, allowing you to move it vertically according to storage needs. Both side panels are equipped with evenly spaced pre-drilled adjustment holes. Simply align the shelf clips with the desired holes at your preferred height for tool-free adjustment.

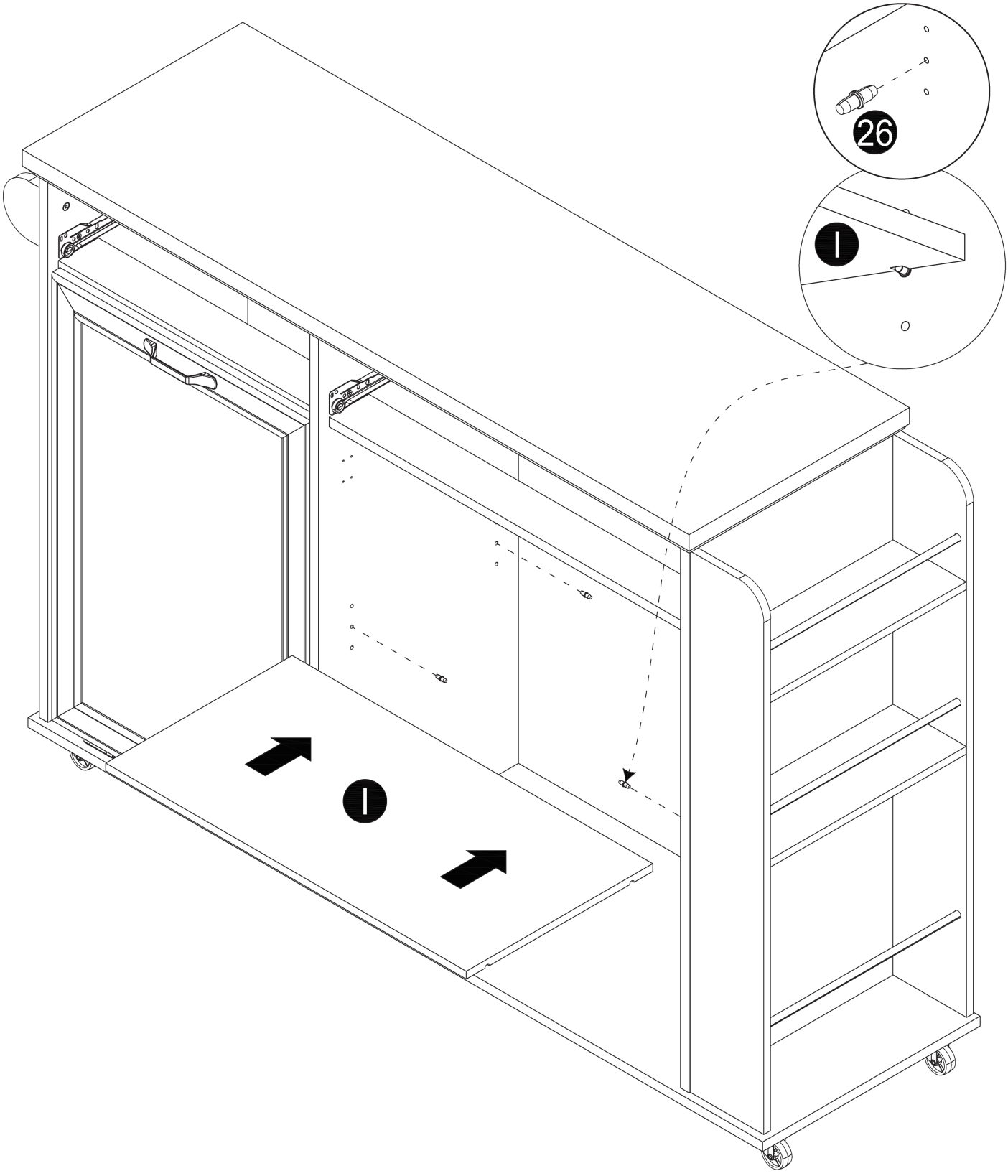

STEP32

Ø3.5X14mm	M4X19mm	Ø25mm	127X24mm
8 X8	13 X4	27 X4	14 X2

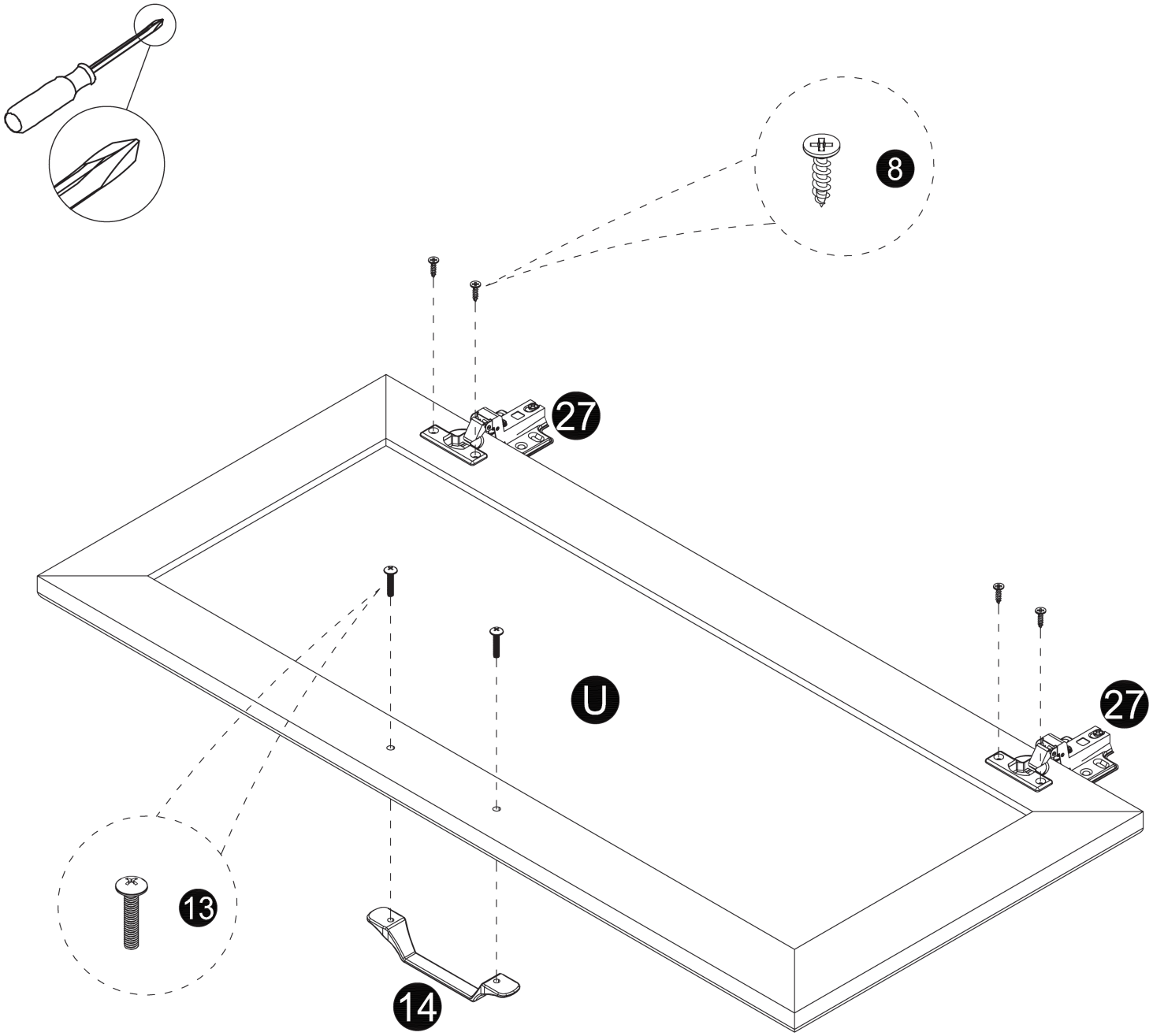

x 2

STEP33

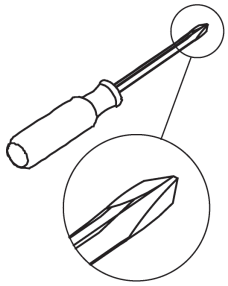

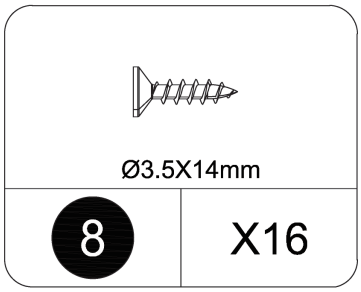

THIS STEP REQUIRES 2 PEOPLE

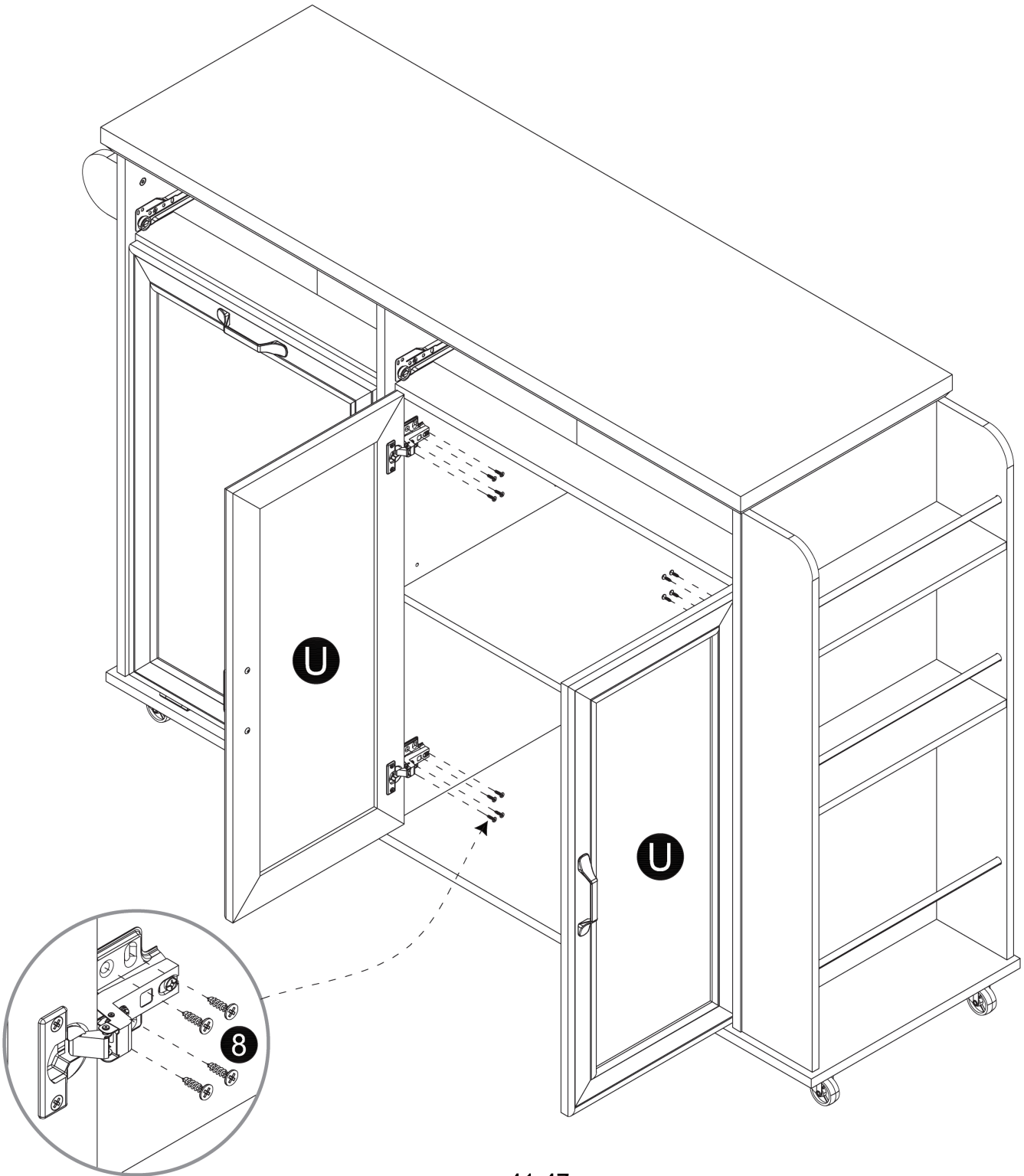

STEP34

SCHEMATIC DIAGRAM OF HINGE ADJUSTMENT DOOR PANEL GAP

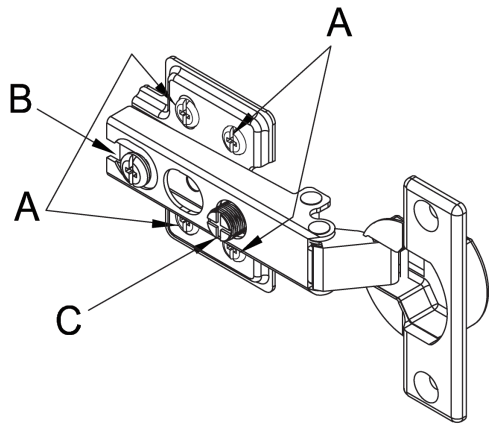

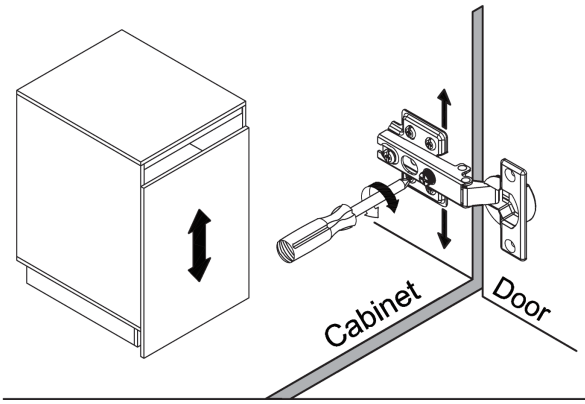

To adjust the vertical height.
Loosen the four screws "A" on both hinges. Two of them are usually in slotted holes which allows you to adjust up or down by a few mm. Then tighten back up.

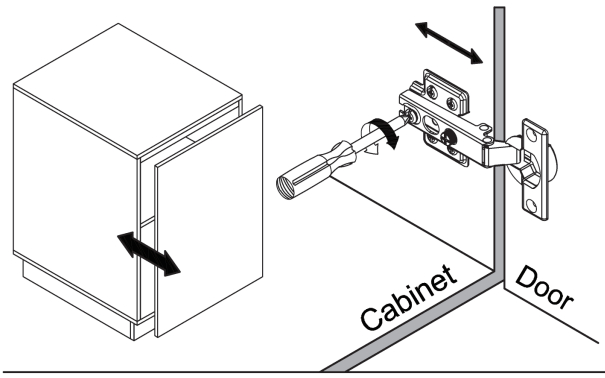

To adjust depth.
Loosen screw "B" and adjust door, if the door can not be adjusted, please loosen screw "C", then try again. Tighten screw "B" and "C".

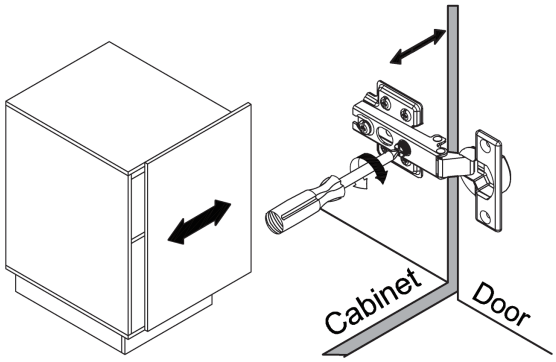

To adjust side ways.
Turning the screw "C" on BOTH hinges on each door.

STEP35

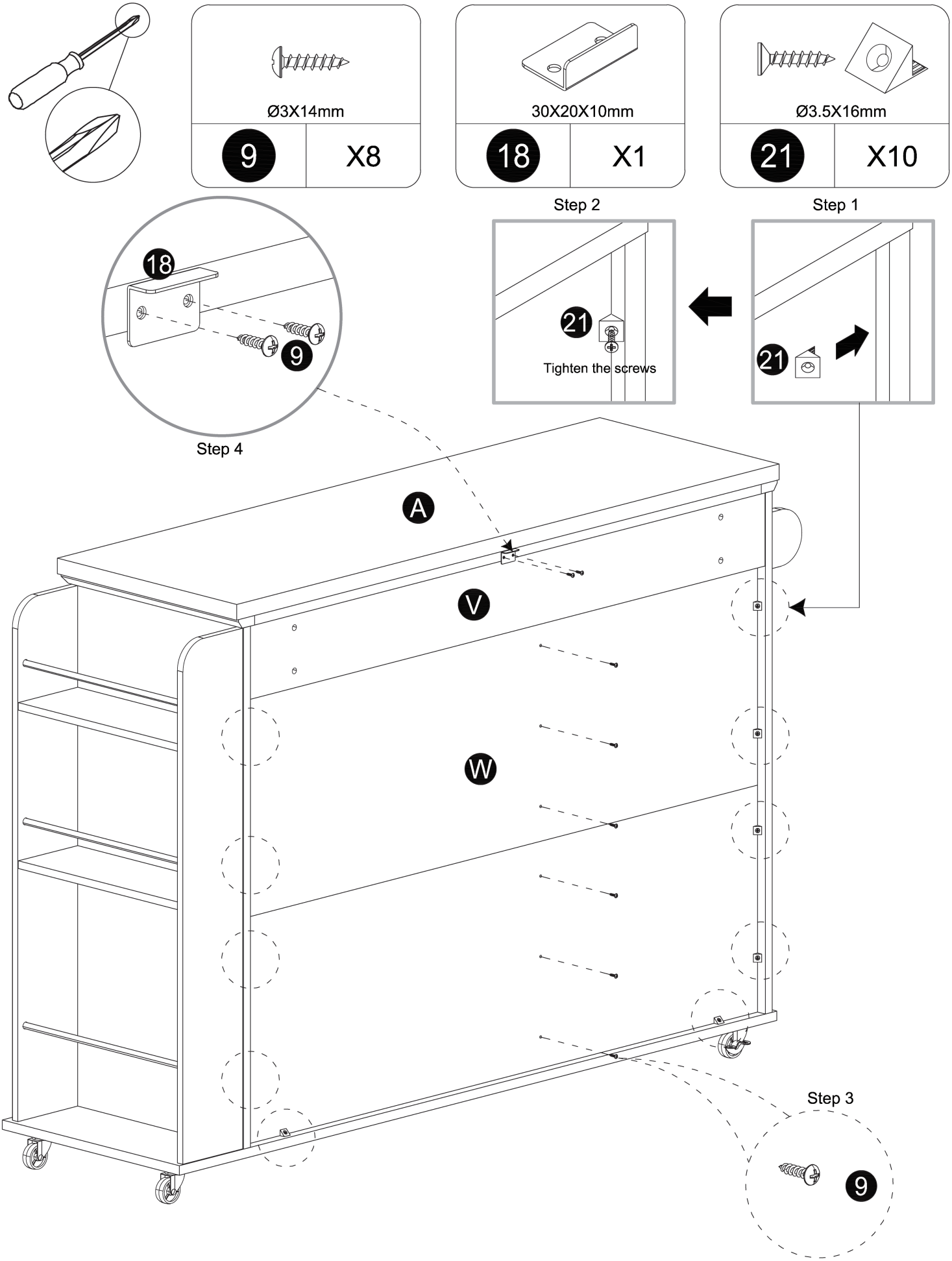
Ø3X14mm
9
X8
30X20X10mm
18
X1
Ø3.5X16mm
21
X10
Step 2
Step 1
18
9
21
Tighten the screws
21
Step 4
A
V
W
Step 3
9

STEP36

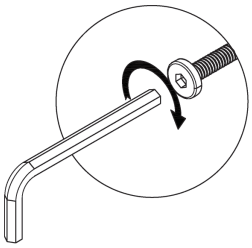

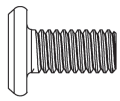

M6X12mm

11 X4

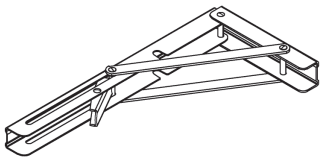

20 X2



M4X96(55)mm

22 X1

step 1	step 2	step 3
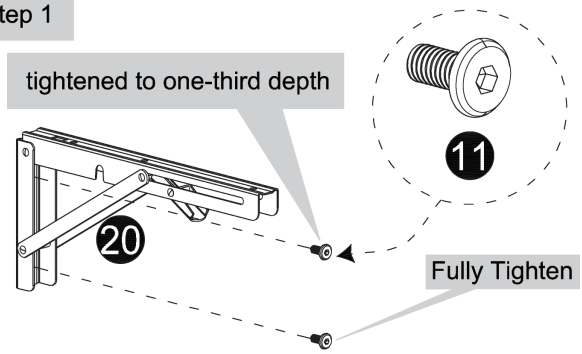	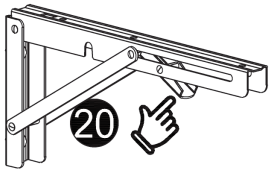	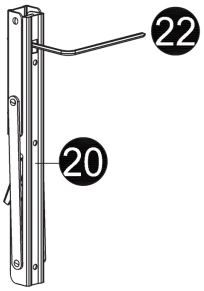
1.Insert screw (11) through the corresponding mounting holes.	2.Hold down the release tab and fold the bracket closed	3.Apply calibrated torque to the upper screw using a hex key until fully secured.

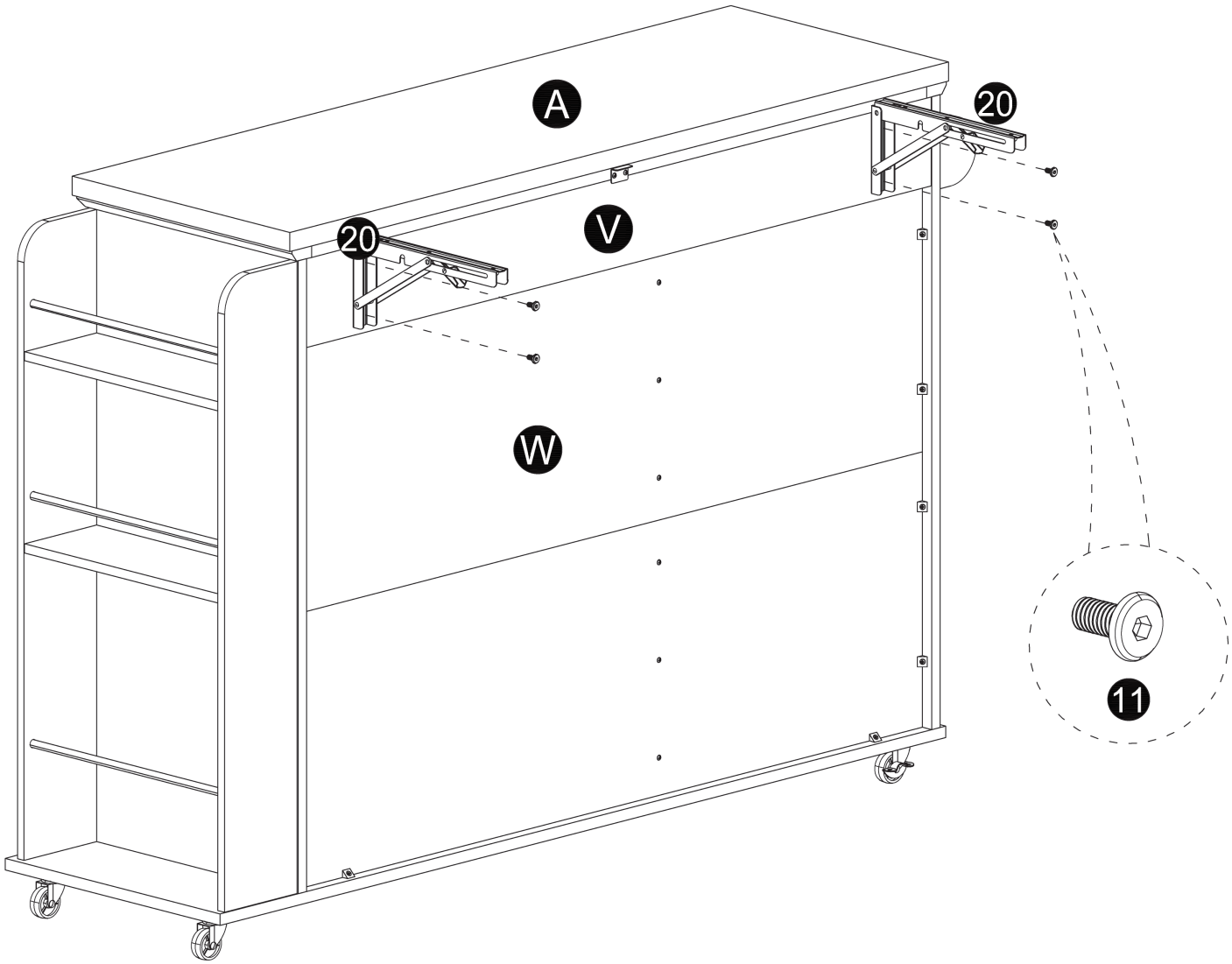

STEP37

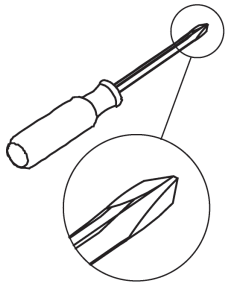

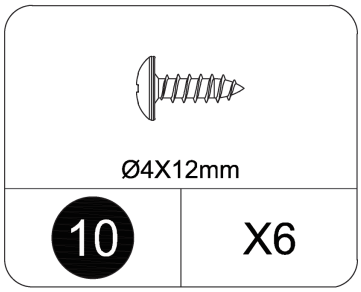

THIS STEP REQUIRES 2 PEOPLE

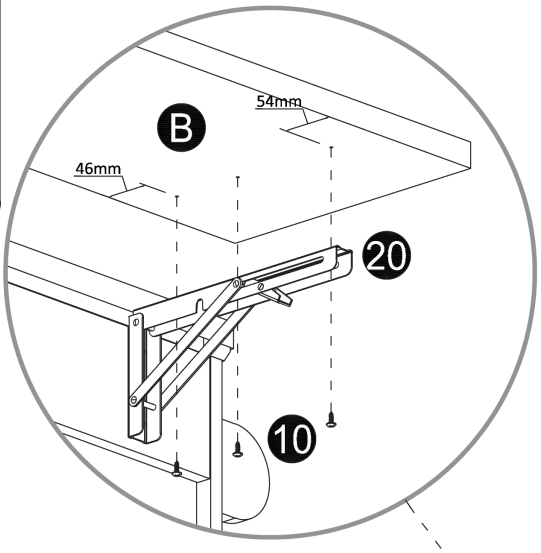

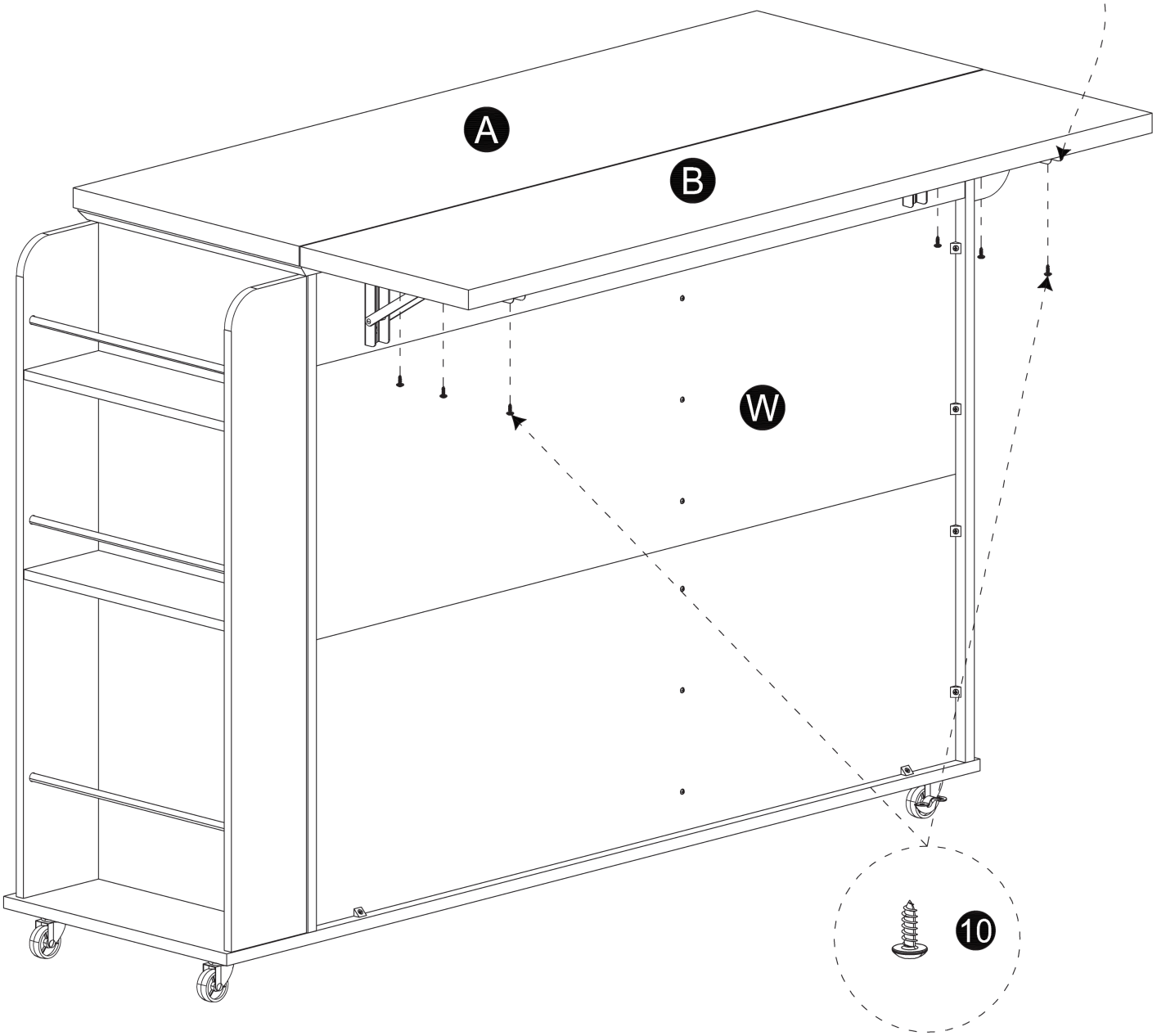

STEP38

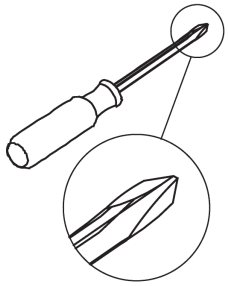

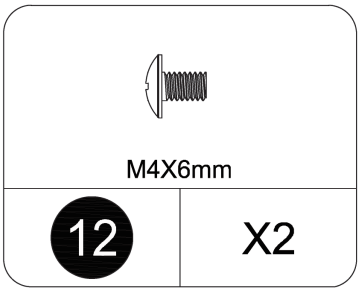
M4X6mm
12
X2

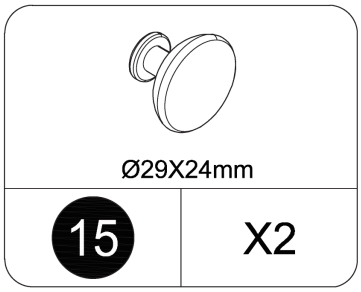
Ø29X24mm
15
X2

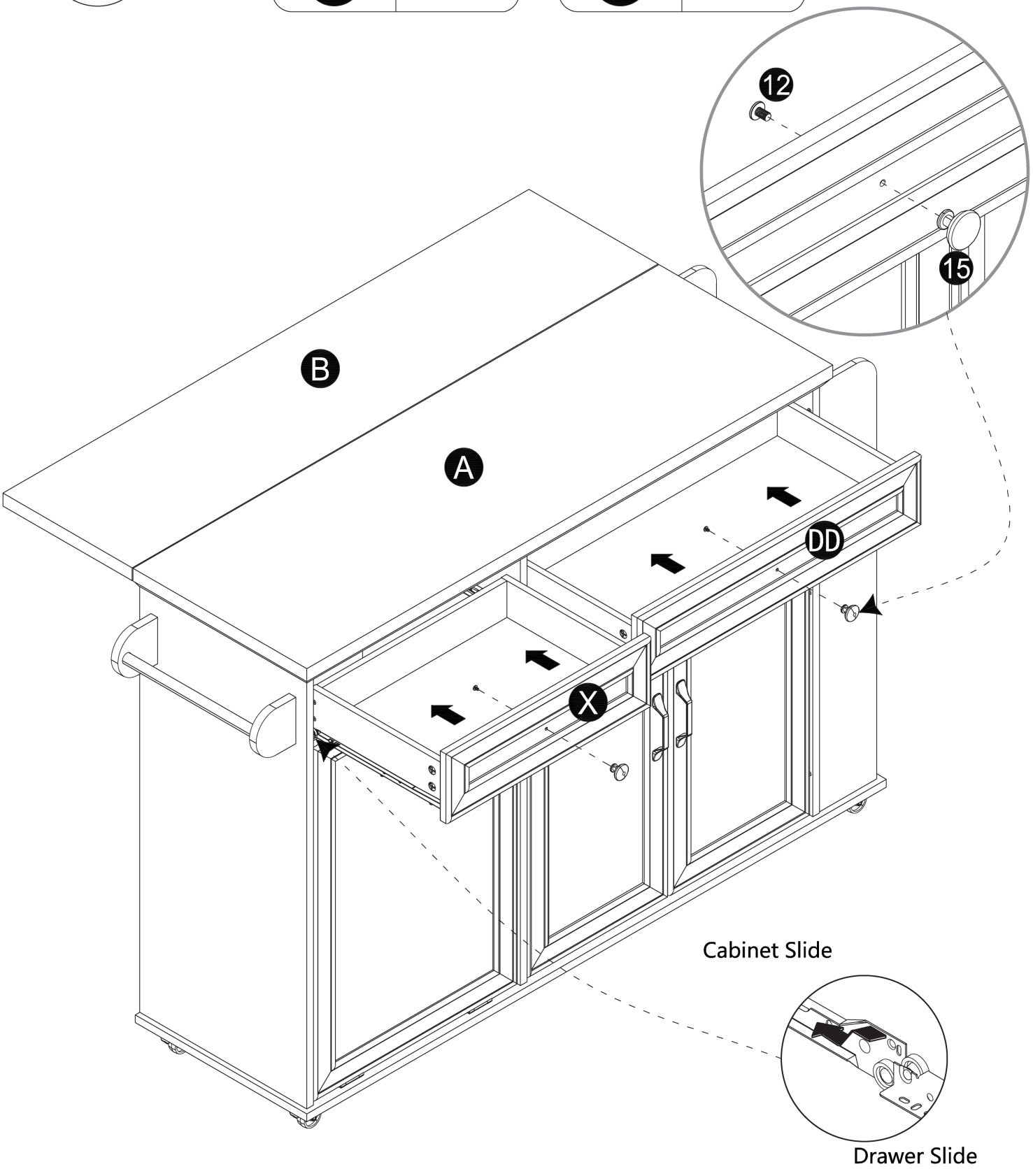
12
15
B
A
DD
X
Cabinet Slide
Drawer Slide

STEP39

